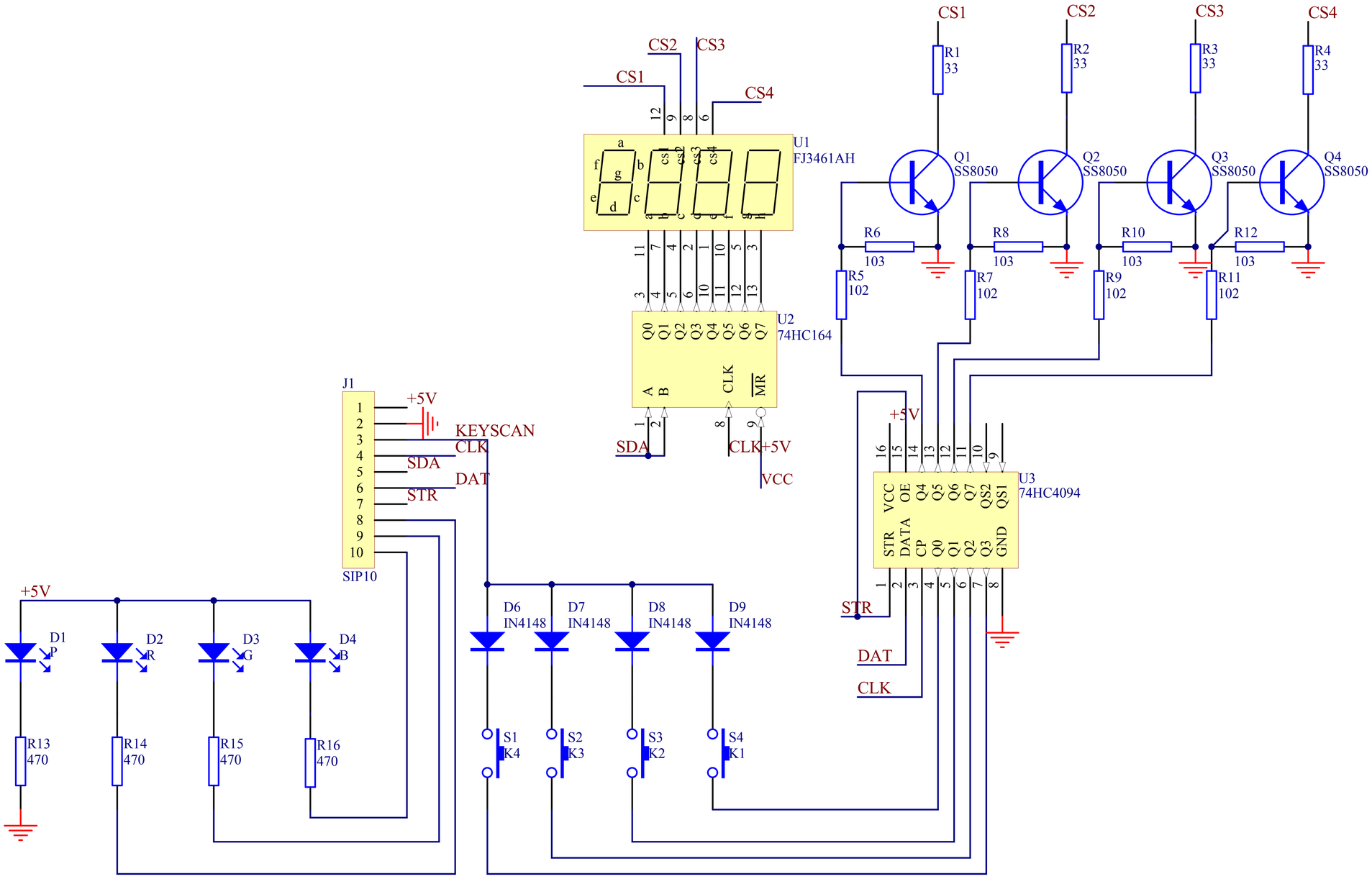

Title		
Size A4	Number	Revision
Date: 2011-7-15		Sheet of
File: D:\rouse\..\keyboard.sch		Drawn By:

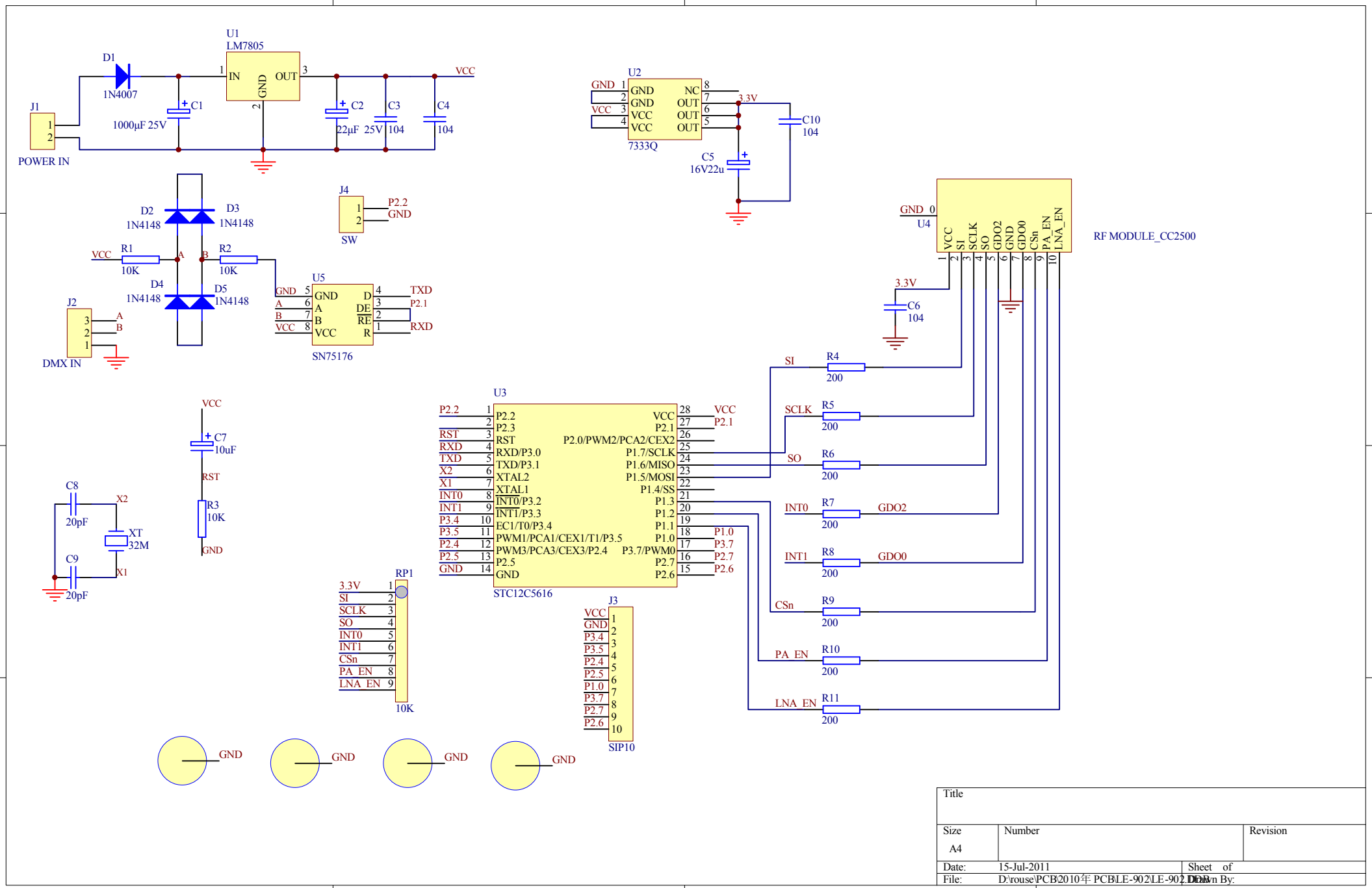

Title		
Size A4	Number	Revision
Date: 15-Jul-2011	Sheet of	
File: D:\rouse\PCB\2010年 PCB\LE-902\LE-902.DDB	Drawn By:	

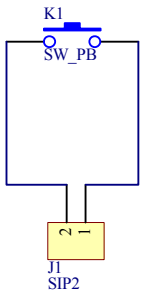

Title		
Size A4	Number	Revision
Date: 15-Jul-2011		Sheet of
File: D:\rouse\PCB\2010年 PCB\LE-902\LE-902.DDB		Drawn By: