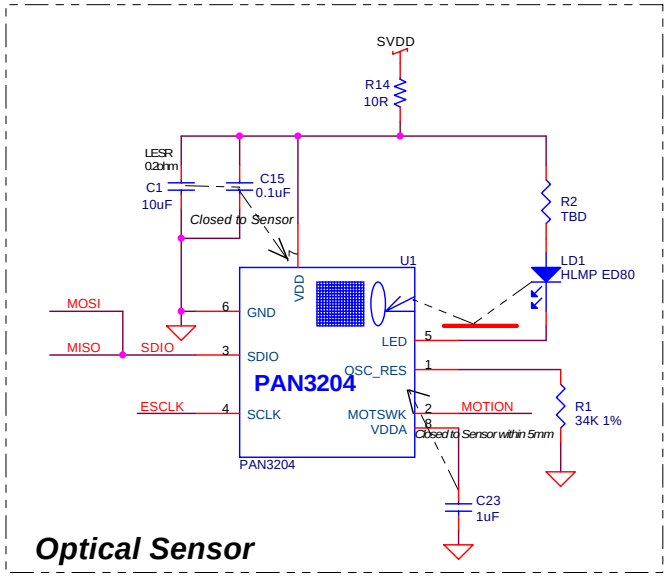


**Power Straps Option** ( ## )

| Power Type | Mount | Not Mount |
|---|---|---|
| Ext. DC 2CELL | R6, R9, R10, U3, D1 | R5, R4, R13,D2 |
| Ext. DC 1CELL | R6, R9, U3, D1 | R5, R4, R10,R13,D2 |
| INT. DC 2CELL | R4, R9,R10,R13,D2 | R5, R6, U3, D1 |

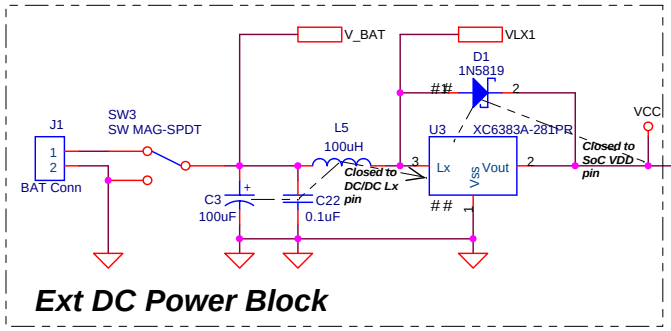


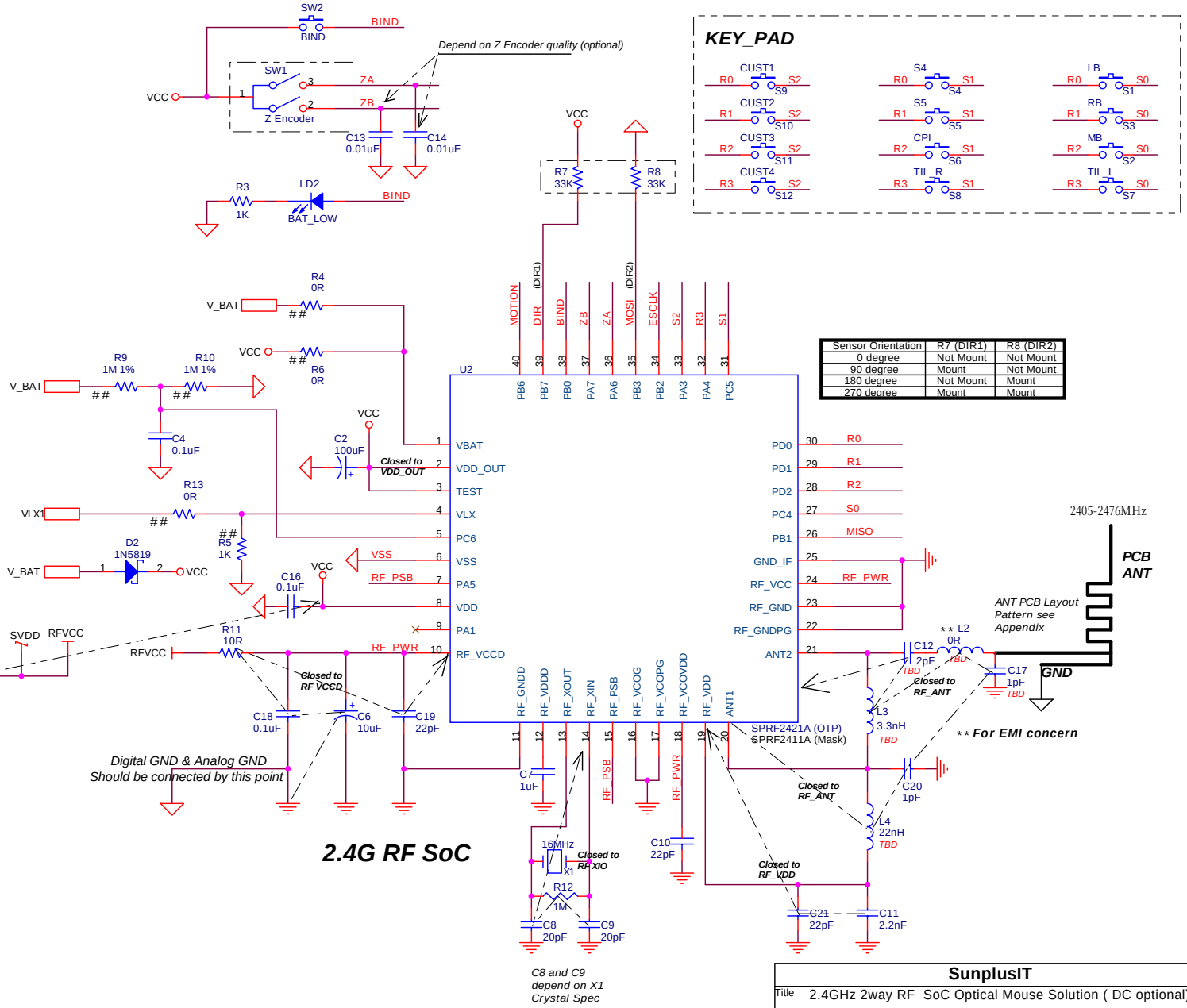


| Sensor Orientation | R7 (DIR1) | R8 (DIR2) |
|---|---|---|
| 0 degree | Not Mount | Not Mount |
| 90 degree | Mount | Not Mount |
| 180 degree | Not Mount | Mount |
| 270 degree | Mount | Mount |

| | | | |
|---|---|---|---|
| SunplusIT | | | |
| Title | 2.4GHz 2way RF SoC Optical Mouse Solution ( DC optional) | | |
| ENG. AP: | Drawn: Y.C. Chen | Check By: D.C. | |
| Size B | 2.4GHZ-2W-ISS-MSE-SPRF24XXA-P3204-TX-CELL Document Number | | Rev PA1 |
| Date: Friday, March 26, 2010 | Sheet 1 of 1 | | |