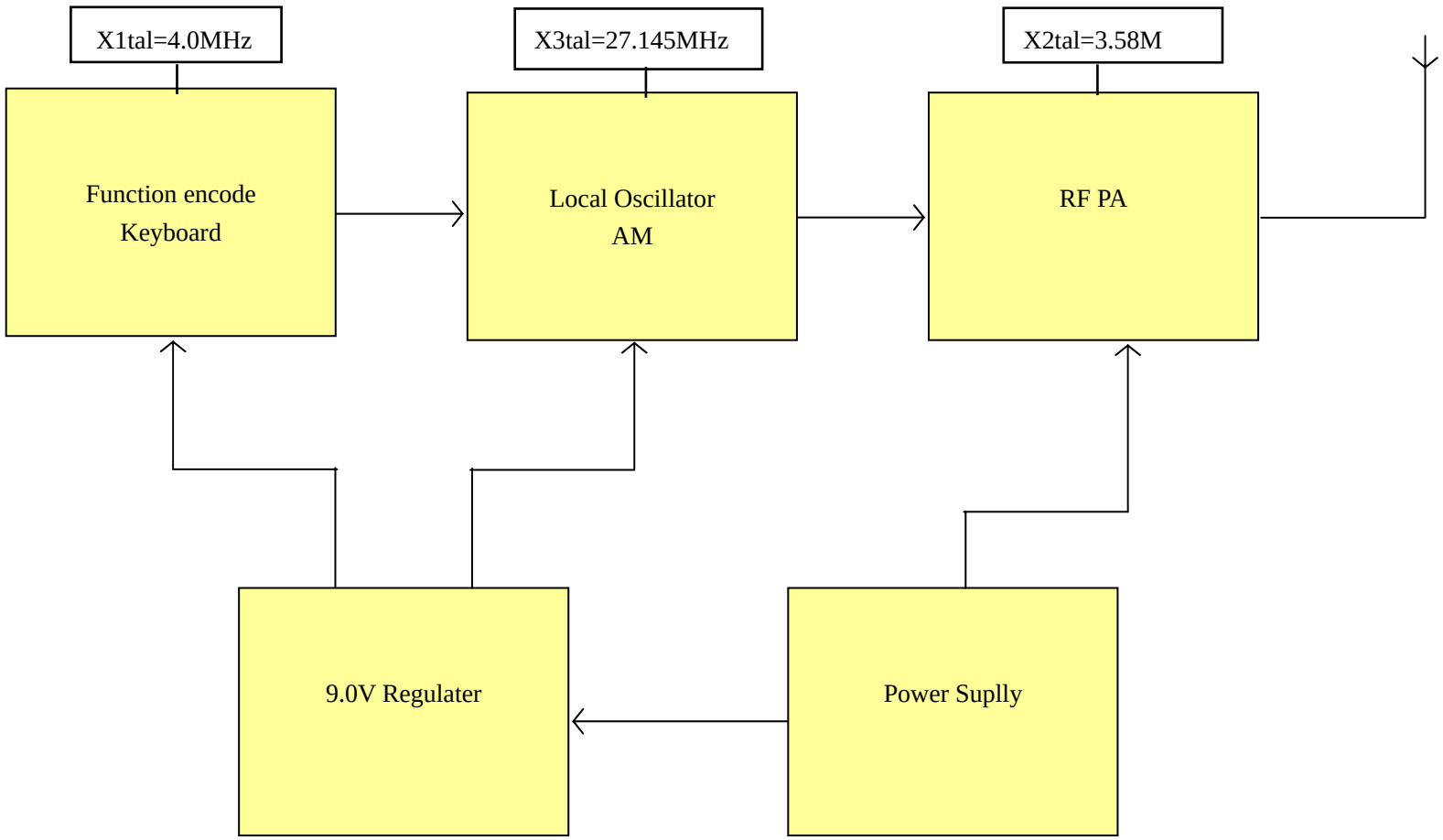Block Diagram