FCC CFR47 PART 22 SUBPART H
FCC CFR47 PART 24 SUBPART E

C2PC CERTIFICATION TEST REPORT

FOR

CDMA WATCH + Bluetooth, DTS b/g

MODEL NUMBER: LG-VC200, LGVC200, VC200, LG-VC200B, LGVC200B, VC200B

FCC ID: ZNFVC200

REPORT NUMBER: 15I21554-E1V1

ISSUE DATE: SEPTEMBER 28, 2015

Prepared for
LG ELECTRONICS MOBILECOMM U.S.A., INC
1000 SYLVAN AVENUE
ENGLEWOOD CLIFFS,
NEW JERSEY, 07632, U.S.A

Prepared by
UL VERIFICATION SERVICES INC.
47173 BENICIA STREET
FREMONT, CA 94538, U.S.A.
TEL: (510) 771-1000
FAX: (510) 661-0888

NVLAP LAB CODE 200065-0

Revision History

Rev.	Issue Date	Revisions	Revised By
V1	9/28/15	Initial Issue	

UL VERIFICATION SERVICES INC. FORM NO: CCSUP4701H
47173 BENICIA STREET, FREMONT, CA 94538, USA TEL: (510) 771-1000 FAX: (510) 661-0888

This report shall not be reproduced except in full, without the written approval of UL Verification Services Inc.

TABLE OF CONTENTS

1. ATTESTATION OF TEST RESULTS 4
2. TEST METHODOLOGY 6
3. FACILITIES AND ACCREDITATION 6
4. CALIBRATION AND UNCERTAINTY 6
4.1. MEASURING INSTRUMENT CALIBRATION 6
4.2. SAMPLE CALCULATION 6
4.3. MEASUREMENT UNCERTAINTY 7
5. EQUIPMENT UNDER TEST 8
5.1. DESCRIPTION OF EUT 8
5.2. MAXIMUM OUTPUT POWER 8
5.3. DESCRIPTION OF AVAILABLE ANTENNAS 9
5.4. DESCRIPTION OF TEST SETUP 10
6. TEST AND MEASUREMENT EQUIPMENT 13
7. SUMMARY TABLE 14
8.1. CDMA2000 15
8.1.1. 1xRTT 15
8.1.2. CDMA2000 OUTPUT POWER RESULT 16
9. RADIATED POWER (ERP&EIRP) 17
9.1.1. ERP/EIRP Results 18
9.1.2. ERP/EIRP PLOTS 19
9.2. FIELD STRENGTH OF SPURIOUS RADIATION 21
9.2.1. SPURIOUS RADIATION PLOTS 22
10. SETUP PHOTOS 24

UL VERIFICATION SERVICES INC. FORM NO: CCSUP4701H
47173 BENICIA STREET, FREMONT, CA 94538, USA TEL: (510) 771-1000 FAX: (510) 661-0888

This report shall not be reproduced except in full, without the written approval of UL Verification Services Inc.

1. ATTESTATION OF TEST RESULTS

COMPANY NAME:	LG ELECTRONICS MOBILECOMM U.S.A., INC.
EUT DESCRIPTION:	CDMA WATCH + Bluetooth, DTS b/g
MODEL:	LG-VC200, LGVC200, VC200, LG-VC200B, LGVC200B, VC200B
SERIAL NUMBER:	22145, 22143
DATE TESTED:	SEPTEMBER 7-11, 2015

APPLICABLE STANDARDS	
STANDARD	**TEST RESULTS**
FCC PART 22H and 24E	PASS

UL Verification Services Inc. tested the above equipment in accordance with the requirements set forth in the above standards. All indications of Pass/Fail in this report are opinions expressed by UL Verification Services Inc. based on interpretations and/or observations of test results. Measurement Uncertainties were not taken into account and are published for informational purposes only. The test results show that the equipment tested is capable of demonstrating compliance with the requirements as documented in this report.

Note: The results documented in this report apply only to the tested sample, under the conditions and modes of operation as described herein. This document may not be altered or revised in any way unless done so by UL Verification Services Inc. and all revisions are duly noted in the revisions section. Any alteration of this document not carried out by UL Verification Services Inc. will constitute fraud and shall nullify the document. This report must not be used by the client to claim product certification, approval, or endorsement by NVLAP, NIST, any agency of the Federal Government, or any agency of any government.

UL VERIFICATION SERVICES INC. FORM NO: CCSUP4701H
47173 BENICIA STREET, FREMONT, CA 94538, USA TEL: (510) 771-1000 FAX: (510) 661-0888

This report shall not be reproduced except in full, without the written approval of UL Verification Services Inc.

Approved & Released For
UL Verification Services Inc. By:

VIEN TRAN
CONSUMER TECHNOLOGY DIVISION
WiSE SENIOR ENGINEER
UL VERIFICATION SERVICES INC

DAN CORONIA
CONSUMER TECHNOLOGY DIVISION
WiSE PROJECT LEAD
UL VERIFICATION SERVICES INC

Tested By:

KIYA KEDIDA
CONSUMER TECHNOLOGY DIVISION
WiSE LAB ENGINEER
UL VERIFICATION SERVICES INC

UL VERIFICATION SERVICES INC. FORM NO: CCSUP4701H
47173 BENICIA STREET, FREMONT, CA 94538, USA TEL: (510) 771-1000 FAX: (510) 661-0888

This report shall not be reproduced except in full, without the written approval of UL Verification Services Inc.

2. TEST METHODOLOGY

The tests documented in this report were performed in accordance with TIA-603-C, FCC CFR 47 Part 22, and FCC CFR Part 24.

3. FACILITIES AND ACCREDITATION

The test sites and measurement facilities used to collect data are located at 47173 and 47266 Benicia Street, Fremont, California, USA. Line conducted emissions are measured only at the 47173 address. The following table identifies which facilities were utilized for radiated emission measurements documented in this report. Specific facilities are also identified in the test results sections.

47173 Benicia Street	47266 Benicia Street
☐ Chamber A(IC: 2324B-1)	☐ Chamber D(IC: 2324B-4)
☐ Chamber B(IC: 2324B-2)	☐ Chamber E(IC: 2324B-5)
☒ Chamber C(IC: 2324B-3)	☐ Chamber F(IC: 2324B-6)
	☐ Chamber G(IC: 2324B-7)
	☐ Chamber H(IC: 2324B-8)

UL Verification Services Inc. is accredited by NVLAP, Laboratory Code 200065-0. The full scope of accreditation can be viewed at http://ts.nist.gov/standards/scopes/2000650.htm.

4. CALIBRATION AND UNCERTAINTY

4.1. MEASURING INSTRUMENT CALIBRATION

The measuring equipment utilized to perform the tests documented in this report has been calibrated in accordance with the manufacturer's recommendations, and is traceable to recognized national standards

4.2. SAMPLE CALCULATION

Where relevant, the following sample calculation is provided:

EIRP = PSA reading with EUT worst orientation (dBm) + Path loss (dB) – cable loss(between the SG and substitution antenna) + Substitution Antenna Factor (dBi)

ERP = PSA reading with EUT worst orientation (dBm) + Path loss (dB) – cable loss(between the SG and substitution antenna)

(Path loss = Signal generator output – PSA reading with substitution antenna)

UL VERIFICATION SERVICES INC. FORM NO: CCSUP4701H
47173 BENICIA STREET, FREMONT, CA 94538, USA TEL: (510) 771-1000 FAX: (510) 661-0888

This report shall not be reproduced except in full, without the written approval of UL Verification Services Inc.

4.3. MEASUREMENT UNCERTAINTY

Where relevant, the following measurement uncertainty levels have been estimated for tests performed on the apparatus:

PARAMETER	UNCERTAINTY
Conducted Disturbance, 0.15 to 30 MHz	3.52 dB
Radiated Disturbance, 30 to 1000 MHz	4.94 dB
Radiated Disturbance, 1GHz to 40GHz	4.94 dB

Uncertainty figures are valid to a confidence level of 95%.

UL VERIFICATION SERVICES INC. FORM NO: CCSUP4701H
47173 BENICIA STREET, FREMONT, CA 94538, USA TEL: (510) 771-1000 FAX: (510) 661-0888

This report shall not be reproduced except in full, without the written approval of UL Verification Services Inc.

5. EQUIPMENT UNDER TEST

5.1. DESCRIPTION OF EUT

The EUT is CDMA WATCH + Bluetooth, DTS b/g

5.2. MAXIMUM OUTPUT POWER

The transmitter has a maximum average conducted and radiated ERP / EIRP output powers as follows:

FCC Part 22/24						
Band	Frequency Range(MHz)	Modulation	Conducted		Radiated	
			AVG(dBm)	AVG(mW)	AVG(dBm)	AVG(mW)
BC0	824~849	1xRTT	24.1	257.04	23.02	200.45
BC1	1850~1910		21.7	147.91	23.16	207.01

UL VERIFICATION SERVICES INC. FORM NO: CCSUP4701H
47173 BENICIA STREET, FREMONT, CA 94538, USA TEL: (510) 771-1000 FAX: (510) 661-0888

This report shall not be reproduced except in full, without the written approval of UL Verification Services Inc.

5.3. DESCRIPTION OF AVAILABLE ANTENNAS

The radio utilizes a PIFA antenna for the [List the bands supported] with a maximum peak gain as follow:

Frequency (MHz)	Peak Gain (dBi)
BC0, 824~849MHz	-3.58
BC1, 1850~1910MHz	-1.50

UL VERIFICATION SERVICES INC. FORM NO: CCSUP4701H
47173 BENICIA STREET, FREMONT, CA 94538, USA TEL: (510) 771-1000 FAX: (510) 661-0888

This report shall not be reproduced except in full, without the written approval of UL Verification Services Inc.

5.4. DESCRIPTION OF TEST SETUP

SUPPORT EQUIPMENT

Support Equipment List				
Description	**Manufacturer**	**Model**	**Serial Number**	**FCC ID**
AC Adapter	LG	STA-U17WD	DS542312055	N/A

I/O CABLES (CONDUCTED SETUP)

I/O Cable List						
Cable No	**Port**	**# of identical ports**	**Connector Type**	**Cable Type**	**Cable Length (m)**	**Remarks**
1	RF Out	1	Spectrum Analyzer	Shielded	None	NA
2	Antenna Port	1	EUT	Shielded	0.1m	NA
3	RF In/Out	1	Communication Test Set	Shielded	1m	NA

I/O CABLES (RADIATED SETUP)

I/O CABLE LIST						
Cable No.	**Port**	**# of Identical Ports**	**Connector Type**	**Cable Type**	**Cable Length**	**Remarks**
1	USB	1	AC Adapter	Un-shielded	1.2m	NA
2	Jack	1	Headset	Shielded	1m	NA
3	RF In/out	1	Communication Test Set	Un-shielded	2m	NA

TEST SETUP

The EUT is continuously communicated to the call box during the tests.

UL VERIFICATION SERVICES INC. FORM NO: CCSUP4701H
47173 BENICIA STREET, FREMONT, CA 94538, USA TEL: (510) 771-1000 FAX: (510) 661-0888

This report shall not be reproduced except in full, without the written approval of UL Verification Services Inc.

SETUP DIAGRAM FOR TESTS (CONDUCTED TEST SETUP)

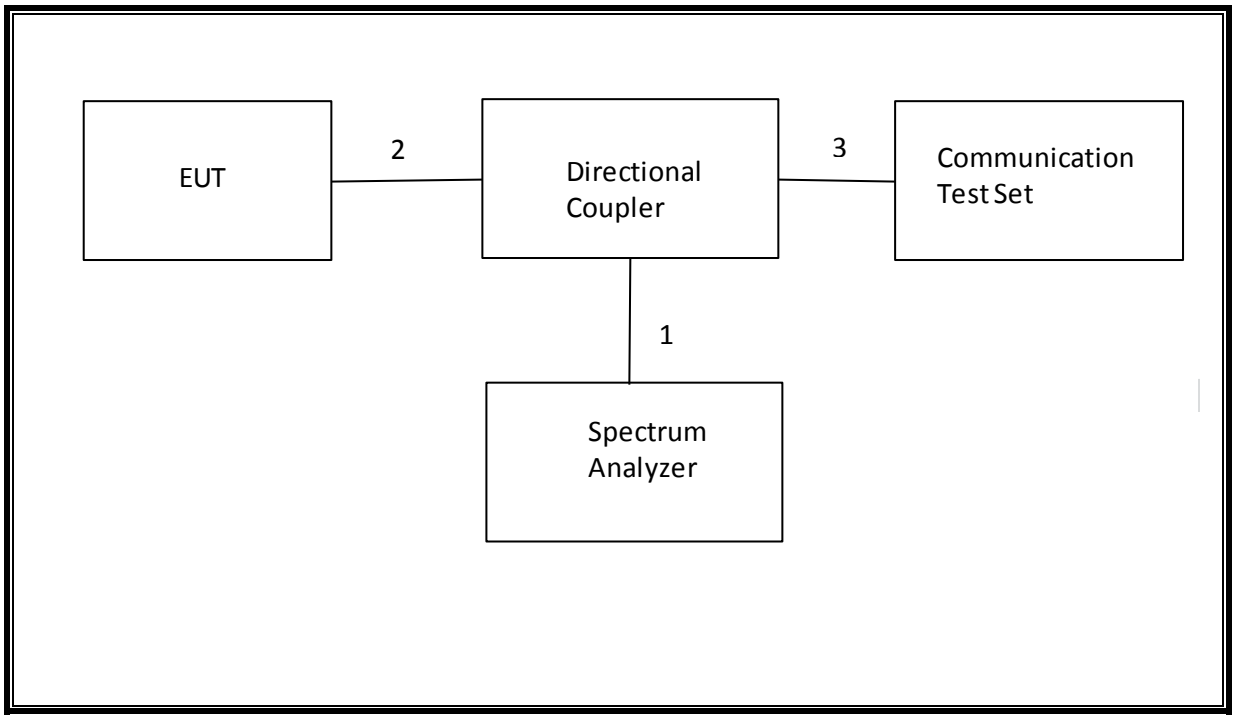

UL VERIFICATION SERVICES INC. FORM NO: CCSUP4701H
47173 BENICIA STREET, FREMONT, CA 94538, USA TEL: (510) 771-1000 FAX: (510) 661-0888
This report shall not be reproduced except in full, without the written approval of UL Verification Services Inc.

SETUP DIAGRAM FOR TESTS (RADIATED TEST SETUP)

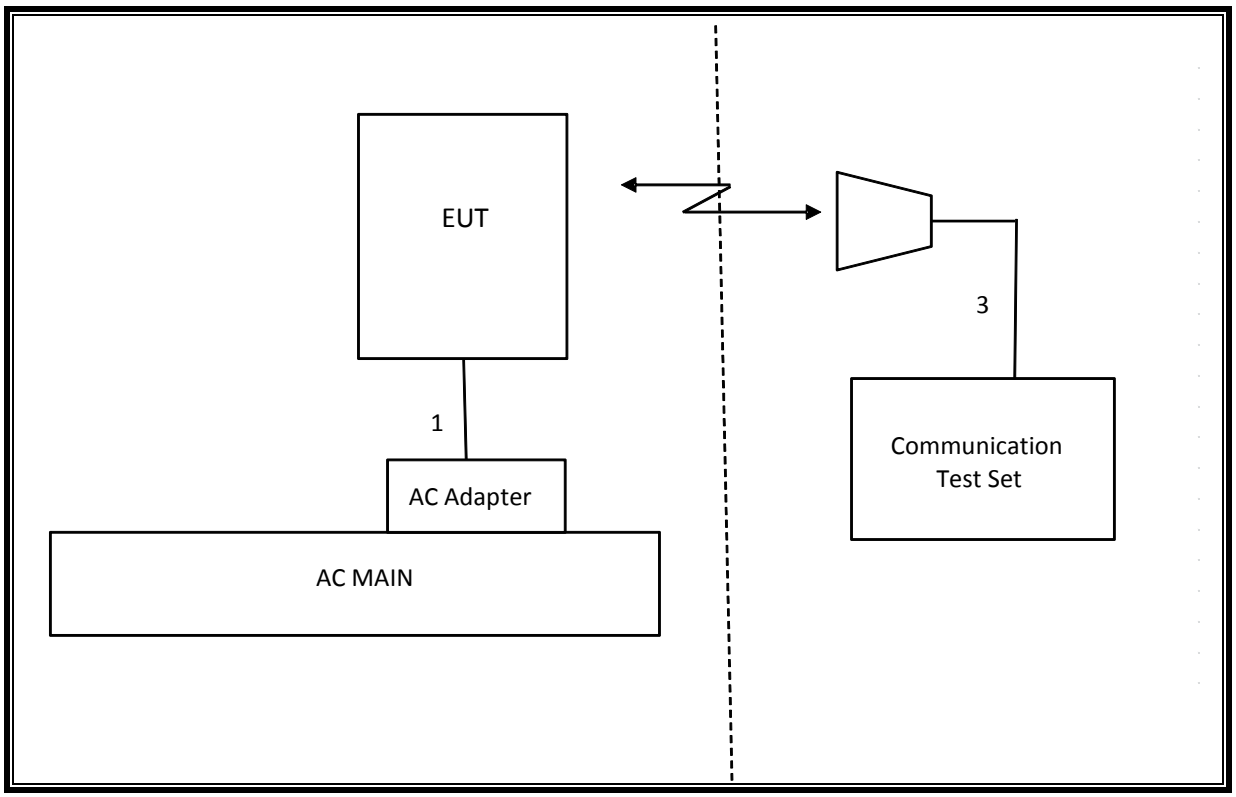

This report shall not be reproduced except in full, without the written approval of UL Verification Services Inc.

6. TEST AND MEASUREMENT EQUIPMENT

The following test and measurement equipment was utilized for the tests documented in this report:

TEST EQUIPMENT LIST				
Description	**Manufacturer**	**Model**	**Asset**	**Cal Due**
Spectrum Analyzer, 44 GHz	Agilent / HP	E4446A	123	10/28/15
Antenna, Bilog, 2 GHz	Sunol Sciences	JB1	T243	12/08/15
Antenna, Horn, 18 GHz	EMCO	3115	C00783	10/25/15
Antenna, Horn, 18 GHz	EMCO	3115	C00784	10/25/15
Highpass Filter, 2.7 GHz	Micro-Tronics	HPM13194	N02687	CNR
Highpass Filter, 1.5 GHz	Micro-Tronics	HPM13193	N02688	CNR
Temperature / Humidity Chamber	Thermotron	SE 600-10-10	C00930	11/08/15
Communications Test Set	R&S	CMW500	T159	07/02/16
DC power supply, 8 V @ 3 A or 15 V	Agilent / HP	E3610A	None	CNR
Antenna, Tuned Dipole 400~1000	ETS	6502	158071	10/14/15
Directional Coupler	RF-Lambda	RFDC5M06G15	None	CNR
Antenna, Horn, 26.5 GHz	ARA	MWH-1826/B	C00589	12/17/15

This report shall not be reproduced except in full, without the written approval of UL Verification Services Inc.

7. SUMMARY TABLE

C2PC Reason: Please see LG-VC200 FCC Class II change description for details.

FCC Part Section	RSS Section(s)	Test Description	Test Limit	Test Condition	Test Result	Note
2.1049	N/A	Occupied Band width (99%)	N/A	Conducted	Pass	see original
22.917(a) 24.238(a)	RSS-132(4.5.1) RSS-133(6.5.1)	Band Edge / Conducted Spurious Emission	-13dBm		Pass	see original
2.1046	N/A	Conducted output power	N/A		Pass	24.1dBm
22.355 24.235	RSS-132(4.3) RSS-133(6.3)	Frequency Stability	2.5PPM		Pass	see original
22.913(a)(2)	RSS-132(4.4)	Effective Radiated Power	38 dBm	Radiated	Pass	23.02
24.232(c)	RSS-133(6.4)	Equivalent Isotropic Radiated Power	33dBm		Pass	23.16
22.917(a) 24.238(a)	RSS-132(4.5.1) RSS-133(6.5.1)	Radiated Spurious Emission	-13dBm		Pass	-30.6 dBm

UL VERIFICATION SERVICES INC. FORM NO: CCSUP4701H
47173 BENICIA STREET, FREMONT, CA 94538, USA TEL: (510) 771-1000 FAX: (510) 661-0888

This report shall not be reproduced except in full, without the written approval of UL Verification Services Inc.

8.1. CDMA2000

8.1.1. 1xRTT

TEST PROCEDURE

This procedure assumes the Agilest 8960 Test Set has the following applications installed and with valid license.

Application	Rev, License
CDMA2000 Mobile Test	B.13.08, L

- Call Setup > Shift & Preset
- Cell Info > Cell Parameters > System ID (SID) > 7
  > Network ID (NID) > 1
- Protocol Rev > 6 (IS-2000-0)
- Radio Config (RC) > Please see following table or details
- FCH Service Option (SO) Setup > Please see following table or details
- Traffic Data Rate > Full
- TDSO SCH Info > F-SCH Parameters > F-SCH Data Rate > 153.6 kbps
  > R-SCH Parameters > R-SCH Data Rate > 153.6 kbps
- Rvs Power Ctrl > Active bits
  - Rvs Power Ctrl > All Up bits (Maximum TxPout)

This report shall not be reproduced except in full, without the written approval of UL Verification Services Inc.

8.1.2. CDMA2000 OUTPUT POWER RESULT

Band	Mode	Ch	Freq. (MHz)	Avg Pwr (dBm)
BC0	RC1, SO55 (Loopback)	1013	824.70	24.0
		384	836.52	23.9
		777	848.31	23.7
	RC3, SO55 (Loopback)	1013	824.70	23.9
		384	836.52	24.0
		777	848.31	23.8
	RC3, SO32 (+F-SCH)	1013	824.70	23.9
		384	836.52	24.0
		777	848.31	24.1

Band	Mode	Ch	Freq. (MHz)	Avg Pwr (dBm)
BC1	RC1, SO55 (Loopback)	25	1851.25	21.6
		600	1880.00	21.2
		1175	1908.75	21.2
	RC3, SO55 (Loopback)	25	1851.25	21.7
		600	1880.00	21.3
		1175	1908.75	21.5
	RC3, SO32 (+F-SCH)	25	1851.25	21.7
		600	1880.00	21.3
		1175	1908.75	21.2

This report shall not be reproduced except in full, without the written approval of UL Verification Services Inc.

9. RADIATED POWER (ERP&EIRP)

RULE PART(S)

FCC: §2.1046, §22.913, and§24.232

LIMITS

22.913(a) - The ERP of mobile transmitters and auxiliary test transmitters must not exceed 7 Watts.

24.232(c) - Mobile/portable stations are limited to 2 watts e.i.r.p. peak power and the equipment must employ means to limit the power to the minimum necessary for successful communications.

In addition, when the transmitter power is measured in terms of average value, the peak-to-average ratio of the power shall not exceed 13dB.

TEST PROCEDURE

ANSI / TIA / EIA 603C Clause 2.2.17; PSA setting reference to 971168 D01 v02r02

For peak power measurement with a PSA:

a) Set the RBW ≥ OBW; b) Set VBW ≥ 3 × RBW; c) Set span ≥ 2 x RBW; d) Sweep time = auto couple; e) Detector = peak; f) Ensure that the number of measurement points ≥ span/RBW; g) Trace mode = max hold;

For average power measurement with a PSA:

a) Set span to at least 1.5 times the OBW; b) Set RBW = 1-5% of the OBW, not to exceed 1 MHz; c) Set VBW ≥ 3 x RBW; d) Set number of points in sweep ≥ 2 × span / RBW; e) Sweep time = auto-couple; f) Detector = RMS (power averaging); g) Use free run trigger If burst duty cycle ≥ 98; h) Use trigger to capture bursts If burst duty cycle < 98; i) Trace average at least 100 traces in power averaging (*i.e.*, RMS) mode. j) Compute the power by integrating the spectrum across the OBW of the signal using the instrument's band power measurement function.

TEST RESULTS

UL VERIFICATION SERVICES INC. FORM NO: CCSUP4701H
47173 BENICIA STREET, FREMONT, CA 94538, USA TEL: (510) 771-1000 FAX: (510) 661-0888

This report shall not be reproduced except in full, without the written approval of UL Verification Services Inc.

9.1.1. ERP/EIRP Results

Band	Mode	Channel	f(MHz)	ERP / EIRP	
				dBm	mW
BC1	1xRTT	25	1851.25	23.16	207.01
		600	1880.00	22.83	191.87
		1175	1908.75	23.07	202.77
BC0	1xRTT	1013	824.70	22.81	190.99
		384	836.52	23.02	200.45
		777	848.31	22.58	181.13

UL VERIFICATION SERVICES INC. FORM NO: CCSUP4701H
47173 BENICIA STREET, FREMONT, CA 94538, USA TEL: (510) 771-1000 FAX: (510) 661-0888
This report shall not be reproduced except in full, without the written approval of UL Verification Services Inc.

9.1.2. ERP/EIRP PLOTS

Band

BC1

1xRTT

High Frequency Fundamental Measurement
UL Verification Services, Inc.

Company: LG Electronics
Project #: 15I21554
Date: 9/9/2015
Test Engineer: Lieu Nguyen
Configuration: EUT Only
Mode: CDMA RTT BC1

Test Equipment:
Receiving: Horn T119, and Chamber C SMA Cables
Substitution: Horn T59 Substitution, 4ft SMA Cable Warehouse

f GHz	SG reading (dBm)	Ant. Pol. (H/V)	Cable Loss (dB)	Antenna Gain (dBi)	EIRP (dBm)	Limit (dBm)	Delta (dB)	Notes
Low Ch								
1.8513	8.4	V	0.90	8.01	15.50	33.0	-17.5	
1.8513	16.1	H	0.90	8.01	23.16	33.0	-9.8	
Mid Ch								
1.8800	7.3	V	0.90	8.01	14.43	33.0	-18.6	
1.8800	15.7	H	0.90	8.01	22.83	33.0	-10.2	
High Ch								
1.9088	8.6	V	0.90	8.01	15.68	33.0	-17.3	
1.9088	16.0	H	0.90	8.01	23.07	33.0	-9.9	

Rev. 3.17.11

This report shall not be reproduced except in full, without the written approval of UL Verification Services Inc.

Band

BC0

1xRTT

High Frequency Substitution Measurement
UL Verification Services, Inc.

Company: Samsung
Project #: 15I21554
Date: 9/9/2015
Test Engineer: Lieu Nguyen
Configuration: EUT Only
Mode: CDMA RTT BC0

Test Equipment:
Receiving: Sunol T185, and 3m Chamber C N-type Cable
Substitution: Dipole T416, 4ft SMA Cable (SN: 506392) Warehouse.

f MHz	SG reading (dBm)	Ant. Pol. (H/V)	Cable Loss (dB)	Antenna Gain (dBd)	ERP (dBm)	Limit (dBm)	Margin (dB)	Notes
Low Ch								
824.70	18.78	V	0.9	0.0	17.88	38.5	-20.6	
824.70	23.71	H	0.9	0.0	22.81	38.5	-15.6	
Mid Ch								
836.52	18.70	V	0.9	0.0	17.80	38.5	-20.6	
836.52	23.92	H	0.9	0.0	23.02	38.5	-15.4	
High Ch								
848.31	17.55	V	0.9	0.0	16.65	38.5	-21.8	
848.31	23.48	H	0.9	0.0	22.58	38.5	-15.9	

Rev. 3.17.11
Note: For Band 13/17 ERP limit is 34.77dBm; For Band 26 limit is 50dBm

This report shall not be reproduced except in full, without the written approval of UL Verification Services Inc.

9.2. FIELD STRENGTH OF SPURIOUS RADIATION

RULE PART(S)

FCC: §2.1053, §22.917 and §24.238

LIMIT

The power of any emission outside of the authorized operating frequency ranges must be attenuated below the transmitting power (P) by a factor of at least 43 + 10 log (P) dB.

TEST PROCEDURE

For Cellular equipment - Compliance with these rules is based on the use of measurement instrumentation employing a resolution bandwidth of 100 kHz or greater. In the 1 MHz bands immediately outside and adjacent to the frequency block a resolution bandwidth of at least one percent of the emission bandwidth of the fundamental emission of the transmitter may be employed. A narrower resolution bandwidth is permitted in all cases to improve measurement accuracy provided the measured power is integrated over the full required measurement bandwidth (i.e. 100 kHz or 1 percent of emission bandwidth, as specified). The emission bandwidth is defined as the width of the signal between two points, one below the carrier center frequency and one above the carrier center frequency, outside of which all emissions are attenuated at least 26 dB below the transmitter power.

For PCS equipment - Compliance with these rules is based on the use of measurement instrumentation employing a resolution bandwidth of 1 MHz or greater. However, in the 1 MHz bands immediately outside and adjacent to the frequency block a resolution bandwidth of at least one percent of the emission bandwidth of the fundamental emission of the transmitter may be employed. A narrower resolution bandwidth is permitted in all cases to improve measurement accuracy provided the measured power is integrated over the full required measurement bandwidth (i.e. 1 MHz or 1 percent of emission bandwidth, as specified). The emission bandwidth is defined as the width of the signal between two points, one below the carrier center frequency and one above the carrier center frequency, outside of which all emissions are attenuated at least 26 dB below the transmitter power.

RESULTS

UL VERIFICATION SERVICES INC. FORM NO: CCSUP4701H
47173 BENICIA STREET, FREMONT, CA 94538, USA TEL: (510) 771-1000 FAX: (510) 661-0888

This report shall not be reproduced except in full, without the written approval of UL Verification Services Inc.

9.2.1. SPURIOUS RADIATION PLOTS

UL Verification Services, Inc.
Above 1GHz High Frequency Substitution Measurement

Company: LG
Project #: 15I21554
Date: 09/10/15
Test Engineer: Lieu Nguyen
Configuration: EUT, AC Adapter
Location: Chamber C
Mode: CDMA 1xRTT BC1 Harmonics

Band BC1 1xRTT

f MHz	SG reading (dBm)	Ant. Pol. (H/V)	Distance (m)	Preamp (dB)	Filter (dB)	EIRP (dBm)	Limit (dBm)	Delta (dB)	Notes
Low Ch, 1851.25									
3702.50	-18.3	V	3.0	35.9	1.0	-53.2	-13.0	-40.2	
5553.75	3.9	V	3.0	35.5	1.0	-30.6	-13.0	-17.6	
7405.00	-3.4	V	3.0	35.7	1.0	-38.2	-13.0	-25.2	
3702.50	-18.5	H	3.0	35.9	1.0	-53.3	-13.0	-40.3	
5553.75	-4.5	H	3.0	35.5	1.0	-39.0	-13.0	-26.0	
7405.00	-8.0	H	3.0	35.7	1.0	-42.7	-13.0	-29.7	
Mid Ch, 1880									
3760.00	-19.9	V	3.0	35.8	1.0	-54.7	-13.0	-41.7	
5640.00	-2.5	V	3.0	35.5	1.0	-37.0	-13.0	-24.0	
7520.00	-12.8	V	3.0	35.7	1.0	-47.6	-13.0	-34.6	
3760.00	-21.0	H	3.0	35.8	1.0	-55.8	-13.0	-42.8	
5640.00	-6.8	H	3.0	35.5	1.0	-41.3	-13.0	-28.3	
7520.00	-12.1	H	3.0	35.7	1.0	-46.8	-13.0	-33.8	
High Ch, 1908.75									
3820.50	-17.1	V	3.0	35.8	1.0	-51.8	-13.0	-38.8	
5528.25	-13.7	V	3.0	35.5	1.0	-48.2	-13.0	-35.2	
7636.00	-10.6	V	3.0	35.8	1.0	-45.4	-13.0	-32.4	
3819.62	-18.3	H	3.0	35.8	1.0	-53.1	-13.0	-40.1	
5726.30	-12.2	H	3.0	35.5	1.0	-46.7	-13.0	-33.7	
7638.00	-8.2	H	3.0	35.8	1.0	-42.9	-13.0	-29.9	

This report shall not be reproduced except in full, without the written approval of UL Verification Services Inc.

UL Verification Services, Inc.
Above 1GHz High Frequency Substitution Measurement

Company: LG Electronics
Project #: 15I21554
Date: 09/10/15
Test Engineer: Lieu Nguyen
Configuration: EUT, AC Adapter
Location: Chamber C
Mode: CDMA 1xRTT BC0 Harmonics

Band

BC0

1xRTT

f MHz	SG reading (dBm)	Ant. Pol. (H/V)	Distance (m)	Preamp (dB)	Filter (dB)	EIRP (dBm)	Limit (dBm)	Delta (dB)	Notes
Low Ch, 824.7									
1649.40	-24.7	V	3.0	37.4	1.0	-61.1	-13.0	-48.1	
2474.10	-23.9	V	3.0	36.4	1.0	-59.3	-13.0	-46.3	
3298.80	-18.4	V	3.0	35.8	1.0	-53.2	-13.0	-40.2	
1649.40	-25.7	H	3.0	37.4	1.0	-62.1	-13.0	-49.1	
2474.10	-21.1	H	3.0	36.4	1.0	-56.5	-13.0	-43.5	
3298.80	-17.4	H	3.0	35.8	1.0	-52.2	-13.0	-39.2	
Mid Ch, 836.52									
1673.04	-25.5	V	3.0	37.3	1.0	-61.8	-13.0	-48.8	
2509.56	-23.6	V	3.0	36.4	1.0	-59.0	-13.0	-46.0	
3346.08	-17.7	V	3.0	35.8	1.0	-52.5	-13.0	-39.5	
1673.04	-25.9	H	3.0	37.3	1.0	-62.2	-13.0	-49.2	
2509.56	-21.5	H	3.0	36.4	1.0	-56.9	-13.0	-43.9	
3346.08	-18.4	H	3.0	35.8	1.0	-53.2	-13.0	-40.2	
High Ch, 848.31									
1696.62	-26.0	V	3.0	37.3	1.0	-62.3	-13.0	-49.3	
2544.93	-21.6	V	3.0	36.3	1.0	-56.9	-13.0	-43.9	
3393.24	-18.1	V	3.0	35.7	1.0	-52.8	-13.0	-39.8	
1696.62	-25.8	H	3.0	37.3	1.0	-62.1	-13.0	-49.1	
2544.93	-20.1	H	3.0	36.3	1.0	-55.4	-13.0	-42.4	
3393.24	-19.0	H	3.0	35.7	1.0	-53.7	-13.0	-40.7	

UL VERIFICATION SERVICES INC. FORM NO: CCSUP4701H
47173 BENICIA STREET, FREMONT, CA 94538, USA TEL: (510) 771-1000 FAX: (510) 661-0888

This report shall not be reproduced except in full, without the written approval of UL Verification Services Inc.