FCC CFR47 PART 22H, 24E AND 27L
CLASS II PERMISSIVE CHANGE
CERTIFICATION TEST REPORT

FOR

LTE PHONE BLUETOOTH AND WLAN

MODEL NUMBER: US780, LG-US780, LGUS780 AS780
LG-AS780 AND LGAS780

FCC ID: ZNFUS780

REPORT NUMBER: 13U14853-1

ISSUE DATE: FEBRUARY 25, 2013

Prepared for
LG ELECTRONICS MOBILECOMM U.S.A., INC.
1000 SYLVAN AVE.
ENGLEWOODS CLIFFS, NJ 07632

Prepared by
UL CCS
47173 BENICIA STREET
FREMONT, CA 94538, U.S.A.
TEL: (510) 771-1000
FAX: (510) 661-0888

NVLAP LAB CODE 200065-0

Revision History

Rev.	Issue Date	Revisions	Revised By
--	2/25/13	Initial Issue	T. Chan

This report shall not be reproduced except in full, without the written approval of UL CCS.

TABLE OF CONTENTS

1. ATTESTATION OF TEST RESULTS 4

2. TEST METHODOLOGY 5

3. FACILITIES AND ACCREDITATION 5

4. CALIBRATION AND UNCERTAINTY 5

4.1. MEASURING INSTRUMENT CALIBRATION 5

4.2. SAMPLE CALCULATION 5

4.3. MEASUREMENT UNCERTAINTY 5

5. EQUIPMENT UNDER TEST 6

5.1. DESCRIPTION OF EUT 6

5.2. DESCRIPTION OF CLASS II PERMISSIVE CHANGE 6

5.3. MAXIMUM OUTPUT POWER 6

5.4. DESCRIPTION OF AVAILABLE ANTENNAS 9

5.5. SOFTWARE AND FIRMWARE 10

5.6. WORST-CASE CONFIGURATION AND MODE 10

5.7. DESCRIPTION OF TEST SETUP 11

6. TEST AND MEASUREMENT EQUIPMENT 13

7. RADIATED TEST RESULTS 14

7.1. RADIATED POWER (ERP & EIRP) 14

7.1.1. CDMA2000 1xRTT 21
7.1.2. LTE Band 2 27
7.1.3. LTE Band 4 32
7.1.4. LTE Band 5 38
7.1.5. LTE Band 12 43
7.1.6. LTE Band 25 48

7.2. FIELD STRENGTH OF SPURIOUS RADIATION 53

7.2.1. CDMA2000 54
7.2.2. *LTE Band 2* 60
7.2.3. *LTE Band 4* 68
7.2.4. *LTE Band 5* 76
7.2.5. *LTE Band 12* 84
7.2.6. *LTE Band 25* 92

8. SETUP PHOTOS 100

This report shall not be reproduced except in full, without the written approval of UL CCS.

1. ATTESTATION OF TEST RESULTS

COMPANY NAME: LG ELECTRONICS MOBILECOMM U.S.A., INC.
1000 SYLVAN AVE.
ENGLEWOODS CLIFFS, NJ 07632

EUT DESCRIPTION: LTE PHONE BLUETOOTH AND WLAN

MODEL: US780, LG-US780, LGUS780 AS780
LG-AS780 AND LGAS780

SERIAL NUMBER: 212KPED000332

DATE TESTED: FEBRUARY 11, 2013 – FEBRUARY 25, 2013

APPLICABLE STANDARDS	
STANDARD	**TEST RESULTS**
CFR 47 Part 22H, 24E AND 27L	Pass

UL CCS tested the above equipment in accordance with the requirements set forth in the above standards. All indications of Pass/Fail in this report are opinions expressed by UL CCS based on interpretations and/or observations of test results. Measurement Uncertainties were not taken into account and are published for informational purposes only. The test results show that the equipment tested is capable of demonstrating compliance with the requirements as documented in this report.

Note: The results documented in this report apply only to the tested sample, under the conditions and modes of operation as described herein. This document may not be altered or revised in any way unless done so by UL CCS and all revisions are duly noted in the revisions section. Any alteration of this document not carried out by UL CCS will constitute fraud and shall nullify the document. This report must not be used by the client to claim product certification, approval, or endorsement by NVLAP, NIST, any agency of the Federal Government, or any agency of any government.

Approved & Released For UL CCS By:

THU CHAN
WiSE OPERATIONS MANAGER
UL CCS

Tested By:

MONA HUA
WiSE LAB TECHNICIAN
UL CCS

This report shall not be reproduced except in full, without the written approval of UL CCS.

2. TEST METHODOLOGY

The tests documented in this report were performed in accordance with TIA-603-C, FCC CFR 47 Part 2, FCC CFR 47 Part 22, FCC CFR Part 24, and FCC Part 27.

3. FACILITIES AND ACCREDITATION

The test sites and measurement facilities used to collect data are located at 47173 Benicia Street, Fremont, California, USA.

UL CCS is accredited by NVLAP, Laboratory Code 200065-0. The full scope of accreditation can be viewed at http://www.ccsemc.com.

4. CALIBRATION AND UNCERTAINTY

4.1. MEASURING INSTRUMENT CALIBRATION

The measuring equipment utilized to perform the tests documented in this report has been calibrated in accordance with the manufacturer's recommendations, and is traceable to recognized national standards.

4.2. SAMPLE CALCULATION

Where relevant, the following sample calculation is provided:

Field Strength (dBuV/m) = Measured Voltage (dBuV) + Antenna Factor (dB/m) + Cable Loss (dB) – Preamp Gain (dB)
36.5 dBuV + 18.7 dB/m + 0.6 dB – 26.9 dB = 28.9 dBuV/m

4.3. MEASUREMENT UNCERTAINTY

Where relevant, the following measurement uncertainty levels have been estimated for tests performed on the apparatus:

PARAMETER	UNCERTAINTY
Conducted Disturbance, 0.15 to 30 MHz	3.52 dB
Radiated Disturbance, 30 to 1000 MHz	4.94 dB

Uncertainty figures are valid to a confidence level of 95%.

This report shall not be reproduced except in full, without the written approval of UL CCS.

5. EQUIPMENT UNDER TEST

5.1. DESCRIPTION OF EUT

The EUT is Cell Phone with 802.11abgn+WWAN+BT Radio.

5.2. DESCRIPTION OF CLASS II PERMISSIVE CHANGE

The major change filed under this application is antennas changed on all bands.

5.3. MAXIMUM OUTPUT POWER

The output power values were verified to be within +/- 0.5 dB from the original values under report number 13U14784-1 report.

The transmitter has a maximum peak conducted and ERP / EIRP output powers as follows:

Part 22 Cellular Band			
Frequency range (MHz)	Modulation	ERP	
		dBm	mW
824.7 – 848.31	CDMA 2000 1xRTT	25.00	316.2
	CDMA 2000 EVDO-Rev A	25.20	331.1

Part 24 PCS Band			
Frequency range (MHz)	Modulation	EIRP	
		dBm	mW
1851.25-1908.75	CDMA 2000 1xRTT	28.64	731.1
	CDMA 2000 EVDO REV. A	29.35	861.0

Part 27 AWS Band			
Frequency range (MHz)	Modulation	EIRP	
		dBm	mW
1711.25-1753.75	CDMA 2000 1xRTT	26.83	481.9
	CDMA 2000 EVDO REV. A	27.13	516.4

This report shall not be reproduced except in full, without the written approval of UL CCS.

Part 24 LTE Band 2 MODE (1.4 MHz BANDWIDTH)				
Frequency range (MHz)	Modulation	Start RB and RB offset	EIRP	
			dBm	mW
1850.7-1913.5	QPSK	6/0	23.88	244.3
	16QAM		23.00	199.5

Part 24 LTE Band 2 MODE (3.0- MHz BANDWIDTH)				
Frequency range (MHz)	Modulation	Start RB and RB offset	EIRP	
			dBm	mW
1851.5-1914.3	QPSK	15/0	24.05	254.1
	16QAM		23.14	206.1

Part 24 LTE Band 2 MODE (5.0 MHz BANDWIDTH)				
Frequency range (MHz)	Modulation	Start RB and RB offset	EIRP	
			dBm	mW
1852.5-1912.5	QPSK	25/0	24.05	254.1
	16QAM		23.14	206.1

Part 24 LTE Band 2 MODE (10.0 MHz BANDWIDTH)				
Frequency range (MHz)	Modulation	Start RB and RB offset	EIRP	
			dBm	mW
1855.0-1905	QPSK	50/0	23.85	242.7
	16QAM		22.95	197.2

Part 27 LTE Band 4 MODE (1.4 MHz BANDWIDTH)				
Frequency range (MHz)	Modulation	Start RB and RB offset	EIRP	
			dBm	mW
1710.7-1754.3	QPSK	6/0	23.03	200.9
	16QAM		22.13	163.3

Part 27 LTE Band 4 MODE (3.0- MHz BANDWIDTH)				
Frequency range (MHz)	Modulation	Start RB and RB offset	EIRP	
			dBm	mW
1711.5-1753.5	QPSK	15/0	23.00	199.5
	16QAM		22.00	158.5

Part 27 LTE Band 4 MODE (5.0 MHz BANDWIDTH)				
Frequency range (MHz)	Modulation	Start RB and RB offset	EIRP	
			dBm	mW
1712.5-1752.5	QPSK	25/0	22.73	187.5
	16QAM		21.73	148.9

Part 27 LTE Band 4 MODE (10.0 MHz BANDWIDTH)				
Frequency range (MHz)	Modulation	Start RB and RB offset	EIRP	
			dBm	mW
1715.0-1755.0	QPSK	50/0	22.07	161.1
	16QAM		21.07	127.9

This report shall not be reproduced except in full, without the written approval of UL CCS.

Part 22 LTE Band 5 MODE (1.4 MHz BANDWIDTH)				
Frequency range (MHz)	Modulation	Start RB and RB offset	EIRP	
			dBm	mW
824.7-848.3	QPSK	6/0	22.00	158.5
	16QAM		21.00	125.9

Part 22 LTE Band 5 MODE (3.0- MHz BANDWIDTH)				
Frequency range (MHz)	Modulation	Start RB and RB offset	EIRP	
			dBm	mW
825.5 - 847.5	QPSK	15/0	21.90	154.9
	16QAM		20.80	120.2

Part 22 LTE Band 5 MODE (5.0 MHz BANDWIDTH)				
Frequency range (MHz)	Modulation	Start RB and RB offset	EIRP	
			dBm	mW
826.5 -846.5	QPSK	25/0	21.70	147.9
	16QAM		20.70	117.5

Part 22 LTE Band 5 MODE (10.0 MHz BANDWIDTH)				
Frequency range (MHz)	Modulation	Start RB and RB offset	EIRP	
			dBm	mW
829.0 - 844.0	QPSK	50/0	21.30	134.9
	16QAM		20.30	107.2

Part 27 LTE Band 12 MODE (1.4 MHz BANDWIDTH)				
Frequency range (MHz)	Modulation	Start RB and RB offset	EIRP	
			dBm	mW
699.7 - 715.3	QPSK	6/0	22.50	177.8
	16QAM		21.20	131.8

Part 27 LTE Band 12 MODE (3.0- MHz BANDWIDTH)				
Frequency range (MHz)	Modulation	Start RB and RB offset	EIRP	
			dBm	mW
700.5 - 714.5	QPSK	15/0	24.07	255.3
	16QAM		22.87	193.6

Part 27 LTE Band 12 MODE (5.0 MHz BANDWIDTH)				
Frequency range (MHz)	Modulation	Start RB and RB offset	EIRP	
			dBm	mW
701.5 - 713.5	QPSK	25/0	24.57	286.4
	16QAM		23.04	201.4

Part 27 LTE Band 12 MODE (10.0 MHz BANDWIDTH)				
Frequency range (MHz)	Modulation	Start RB and RB offset	EIRP	
			dBm	mW
704.0 - 711.0	QPSK	50/0	23.00	199.5
	16QAM		22.00	158.5

This report shall not be reproduced except in full, without the written approval of UL CCS.

Part 24 LTE Band 25 MODE (1.4 MHz BANDWIDTH)				
Frequency range (MHz)	Modulation	Start RB and RB offset	EIRP	
			dBm	mW
1850.7-1914.5	QPSK	6/0	22.15	164.1
	16QAM		20.95	124.5

Part 24 LTE Band 25 MODE (3.0- MHz BANDWIDTH)				
Frequency range (MHz)	Modulation	Start RB and RB offset	EIRP	
			dBm	mW
1851.5-1913.5	QPSK	15/0	22.45	175.8
	16QAM		21.45	139.6

Part 24 LTE Band 25 MODE (5.0 MHz BANDWIDTH)				
Frequency range (MHz)	Modulation	Start RB and RB offset	EIRP	
			dBm	mW
1852.5-1912.5	QPSK	25/0	22.76	188.8
	16QAM		21.66	146.6

Part 24 LTE Band 25 MODE (10.0 MHz BANDWIDTH)				
Frequency range (MHz)	Modulation	Start RB and RB offset	EIRP	
			dBm	mW
1855.0-1905.0	QPSK	50/0	22.25	167.9
	16QAM		21.29	134.6

5.4. DESCRIPTION OF AVAILABLE ANTENNAS

The radio utilizes a band gap type integral antenna with a maximum peak gain as follow:

Frequency (MHz)	Gain (dBi)
BC0, 824 – 894MHz	-2.99
BC1, 1850-1900MHz	-0.18
BC15, 1710-1755MHz	-3.10
LTE Band 12, 698-746MHz	-4.15
LTE Band 2, 1850-1990MHz	-4.70
LTE Band 4, 1710-1755MHz	-5.83
LTE Band 5, 824 – 844MHz	-2.07
LTE Band 25, 1850-1995MHz	-5.10

This report shall not be reproduced except in full, without the written approval of UL CCS.

5.5. SOFTWARE AND FIRMWARE

The EUT software installed during testing was LAP8960IR120417.

The EUT is linked with Agilent 8960 and CMW500 Communication Test Sets.

5.6. WORST-CASE CONFIGURATION AND MODE

The worst-case is EUT on the highest power. Based on Peak Power measurement investigations, the following modes should be considered as worst-case scenario for all other measurements.

Worst-case modes:
- CDMA 2000 1xRTT
- CDMA 2000 EVDO REV. A
- LTE Band 2, 4, 5, 12 and 25

For the fundamental investigation, since the EUT is a portable device that has three orientations; an X, Y and Z orientations and the worst among X, Y, and Z with AC/DC adapter and headset have been investigated. The worst case was found to be a Y-position with AC/DC adapter and headset for 1xRTT Cell and PCS bands and Z-Position for EVDO PCS band without AC Adapter. And on LTE bands, the worst case was at Z position.

This report shall not be reproduced except in full, without the written approval of UL CCS.

5.7. DESCRIPTION OF TEST SETUP

RADIATED TESTS SUPPORT EQUIPMENT

Support Equipment List			
Description	Manufacturer	Model	Serial Number
AC Adapter	LG	MCS-02WR	190000054
Headset	LG	NA	NA

I/O CABLES (RF Conducted Test)

I/O CABLE LIST						
Cable No.	Port	# of Identic Ports	Connector Type	Cable Type	Cable Length	Remarks
1	RF In/Out	1	Spectrum Analyzer	UN-SHELDED	None	N/A
2	RF out	1	Directional Coupler	UN-SHELDED	0.1m	N/A
3	RF In/Out	1	Communication Call box	UN-SHELDED	0.5m	N/A

I/O CABLES (RF Radiated Test)

I/O CABLE LIST						
Cable No.	Port	# of Identical Ports	Connector Type	Cable Type	Cable Length	Remarks
1	AC	1	115VAC	UN-SHELDED	1.0m	N/A
2	DC	1	DC	UN-SHELDED	1.0m	Volume control on
3	Audio	1	Earphone	UN-SHELDED	1.0m	NA
4	RF In/Out	1	Horn	UN-SHELDED	5m	NA

TEST SETUP

This report shall not be reproduced except in full, without the written approval of UL CCS.

RADIATED SETUP

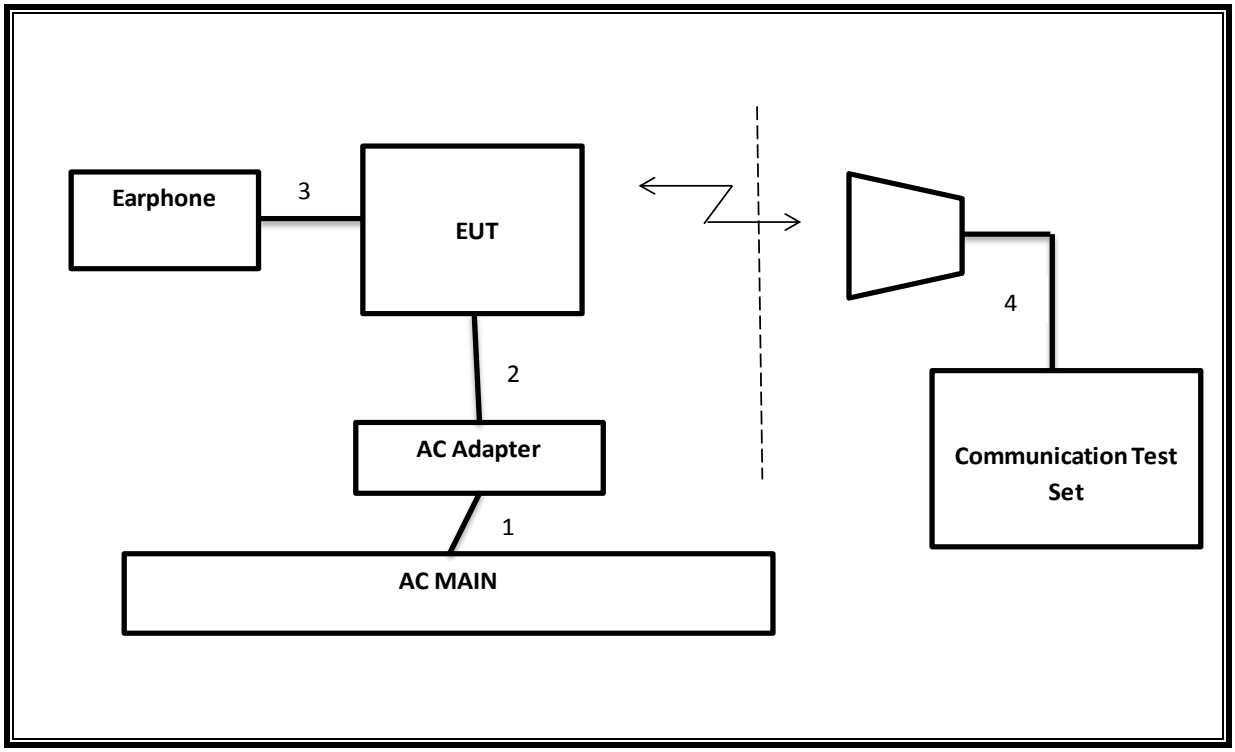

This report shall not be reproduced except in full, without the written approval of UL CCS.

6. TEST AND MEASUREMENT EQUIPMENT

The following test and measurement equipment was utilized for the tests documented in this report:

TEST EQUIPMENT LIST				
Description	**Manufacturer**	**Model**	**Asset**	**Cal Due**
Spectrum Analyzer, 26.5 GHz	Agilent / HP	E4440A	C01176	12/13/13
Spectrum Analyzer, 44 GHz	Agilent / HP	E4446A	C01069	12/20/13
Antenna, Horn, 18 GHz	EMCO	3115	C00783	10/25/13
Antenna, Horn, 18 GHz	EMCO	3115	C00945	12/11/13
Antenna, Bilog, 2 GHz	Sunol Sciences	JB1	C01011	03/23/13
Preamplifier, 26.5 GHz	Agilent / HP	8449B	C01063	10/22/13
Communication Test Set	Agilent / HP	E5515C	C01086	11/10/13
Communication Test Set	R & S	CMW500	None	06/28/13
Highpass Filter, 1.5 GHz	Micro-Tronics	HPM13193	N02689`	CNR
Highpass Filter, 2.7 GHz	Micro-Tronics	HPM13194	N02687	CNR
Vector Signal Generator	Agilent / HP	E4438C	None	07/06/13
Antenna, Tuned Dipole 400~1000 MHz	ETS	3121C DB4	C00993	02/01/14

This report shall not be reproduced except in full, without the written approval of UL CCS.

7. RADIATED TEST RESULTS

7.1. RADIATED POWER (ERP & EIRP)

RULE PART(S)

FCC: §2.1046, §22.913, §24.232, §27.50(d) (2)

LIMITS

22.913(a) - The ERP of mobile transmitters and auxiliary test transmitters must not exceed 7 Watts.

24.232(c) - Mobile/portable stations are limited to 2 watts e.i.r.p. peak power and the equipment must employ means to limit the power to the minimum necessary for successful communications.

27.50 (c)(10) Portable stations (hand-held devices) transmitting in the 746–757 MHz, 758–763 MHz, 776–793 MHz, and 805–806 MHz bands are limited to 3 watts ERP.

27.50 (d)(4) The following power and antenna height requirements apply to stations transmitting in the 1710–1755 MHz and 2110–2155 MHz bands: Fixed, mobile, and portable (hand-held) stations operating in the 1710–1755 MHz band are limited to 1 watt EIRP.

TEST PROCEDURE

ANSI / TIA / EIA 603C Clause 2.2.17

MODES TESTED

- CDMA 2000 1xRTT, RC1 S02.
- CDMA 2000 EVDO REV. A
- LTE Band 2, 4, 5, 12, 12 and 25.

RESULTS

This report shall not be reproduced except in full, without the written approval of UL CCS.

CELLULAR BAND (ERP)

Mode	Channel	f (MHz)	ERP	
			dBm	mW
1xRTT	1013	824.70	24.15	260.02
	384	836.60	24.20	263.03
	777	848.31	25.00	316.23
EVDO REV A	1013	824.70	25.20	331.13
	384	836.60	24.72	296.48
	777	848.31	25.10	323.59

PCS BAND (EIRP)

Mode	Channel	f (MHz)	EIRP	
			dBm	mW
1xRTT	25	1851.25	28.40	691.83
	600	1880.00	28.25	668.34
	1175	1908.75	28.64	731.14
EVDO REV. A	25	1851.25	29.30	851.14
	600	1880.00	29.35	860.99
	1175	1908.75	29.34	859.01

AWS BAND (EIRP)

Mode	Channel	f (MHz)	EIRP	
			dBm	mW
1xRTT	25	1711.25	25.10	323.59
	450	1732.50	26.62	459.20
	875	1753.75	26.83	481.95
EVDO REV. A	25	1711.25	26.50	446.68
	460	1732.50	27.02	503.50
	895	1753.75	27.13	516.42

This report shall not be reproduced except in full, without the written approval of UL CCS.

EIRP LTE BAND 2

Mode	RB/RB SIZE	f (MHz)	EIRP	
			dBm	mW
1.4 MHZ BAND QPSK	6/0	1850.70	23.88	244.34
		1880.00	23.55	226.46
		1909.30	23.24	210.86
1.4 MHZ BAND 16QAM		1850.70	23.00	199.53
		1880.00	22.55	179.89
		1909.30	22.34	171.40
3.0 MHZ BAND QPSK	15/0	1851.50	23.60	229.09
		1880.00	24.05	254.10
		1908.50	23.54	225.94
3.0 MHZ BAND 16QAM		1851.50	22.60	181.97
		1880.00	23.14	206.06
		1908.50	22.44	175.39
5.0 MHZ BAND QPSK	25/0	1852.50	23.80	239.88
		1880.00	24.05	254.10
		1907.50	24.04	253.51
5.0 MHZ BAND 16QAM		1852.50	22.90	194.98
		1880.00	23.05	201.84
		1907.50	23.14	206.06
10.0 MHZ BAND QPSK	50/0	1855.00	23.70	234.42
		1880.00	23.85	242.66
		1905.00	23.84	242.10
10.0 MHZ BAND 16QAM		1855.00	22.80	190.55
		1880.00	22.95	197.24
		1905.00	22.94	196.79

This report shall not be reproduced except in full, without the written approval of UL CCS.

EIRP LTE BAND 4

Mode	RB/RB SIZE	f (MHz)	EIRP	
			dBm	mW
1.4 MHZ BAND QPSK	6/0	1710.70	22.80	190.55
		1732.50	22.72	187.07
		1754.30	23.02	200.45
1.4 MHZ BAND 16QAM		1710.70	21.90	154.88
		1732.50	21.72	148.59
		1754.30	22.13	163.31
3.0 MHZ BAND QPSK	15/0	1711.50	23.00	199.53
		1732.50	22.62	182.81
		1753.50	22.93	196.34
3.0 MHZ BAND 16QAM		1711.50	22.00	158.49
		1732.50	21.42	138.68
		1753.50	21.83	152.41
5.0 MHZ BAND QPSK	25/0	1712.50	22.30	169.82
		1732.50	22.22	166.72
		1752.50	22.73	187.50
5.0 MHZ BAND 16QAM		1712.50	21.30	134.90
		1732.50	21.22	132.43
		1752.50	21.73	148.94
10.0 MHZ BAND QPSK	50/0	1715.00	22.07	161.06
		1732.50	19.81	95.72
		1750.00	21.45	139.64
10.0 MHZ BAND 16QAM		1715.00	21.07	127.94
		1732.50	18.81	76.03
		1750.00	20.45	110.92

This report shall not be reproduced except in full, without the written approval of UL CCS.

ERP LTE BAND 5

Mode	RB/RB SIZE	f (MHz)	ERP	
			dBm	mW
1.4 MHZ BAND QPSK	6/0	824.70	22.00	158.49
		836.50	21.70	147.91
		848.30	21.10	128.82
1.4 MHZ BAND 16QAM		824.70	21.00	125.89
		836.50	20.60	114.82
		848.30	19.90	97.72
3.0 MHZ BAND QPSK	15/0	825.50	21.90	154.88
		836.50	21.50	141.25
		847.50	21.30	134.90
3.0 MHZ BAND 16QAM		825.50	20.80	120.23
		836.50	20.40	109.65
		847.50	20.20	104.71
5.0 MHZ BAND QPSK	25/0	826.50	21.53	142.23
		836.50	21.30	134.90
		846.50	21.70	147.91
5.0 MHZ BAND 16QAM		826.50	20.50	112.20
		836.50	20.20	104.71
		846.50	20.70	117.49
10.0 MHZ BAND QPSK	50/0	829.00	20.80	120.23
		836.50	21.30	134.90
		844.00	21.00	125.89
10.0 MHZ BAND 16QAM		829.00	19.80	95.50
		836.50	20.30	107.15
		844.00	19.90	97.72

This report shall not be reproduced except in full, without the written approval of UL CCS.

ERP LTE BAND 12

Mode	RB/RB SIZE	f (MHz)	ERP	
			dBm	mW
1.4 MHZ BAND QPSK	6/0	699.70	22.50	177.83
		707.50	22.10	162.18
		715.30	22.30	169.82
1.4 MHZ BAND 16QAM		699.70	21.20	131.83
		707.50	21.00	125.89
		715.30	20.60	114.82
3.0 MHZ BAND QPSK	15/0	700.50	24.07	255.27
		707.50	23.94	247.74
		714.50	23.91	246.04
3.0 MHZ BAND 16QAM		700.50	22.87	193.64
		707.50	22.34	171.40
		714.50	22.71	186.64
5.0 MHZ BAND QPSK	25/0	701.50	24.57	286.42
		707.50	24.44	277.97
		713.50	23.11	204.64
5.0 MHZ BAND 16QAM		701.50	22.97	198.15
		707.50	23.04	201.37
		713.50	21.91	155.24
10.0 MHZ BAND QPSK	50/0	704.00	22.40	173.78
		707.50	23.00	199.53
		711.00	22.70	186.21
10.0 MHZ BAND 16QAM		704.00	21.00	125.89
		707.50	22.00	158.49
		711.00	21.50	141.25

This report shall not be reproduced except in full, without the written approval of UL CCS.

EIRP LTE BAND 25

Mode	RB/RB SIZE	f (MHz)	EIRP	
			dBm	mW
1.4 MHZ BAND QPSK	6/0	1850.70	21.07	127.94
		1882.50	21.21	132.13
		1914.30	22.15	164.06
1.4 MHZ BAND 16QAM		1850.70	20.07	101.62
		1882.50	20.11	102.57
		1914.30	20.95	124.45
3.0 MHZ BAND QPSK	15/0	1851.50	22.07	161.06
		1882.50	22.21	166.34
		1913.50	22.45	175.79
3.0 MHZ BAND 16QAM		1851.50	20.97	125.03
		1882.50	21.11	129.12
		1913.50	21.45	139.64
5.0 MHZ BAND QPSK	25/0	1852.50	22.19	165.58
		1882.50	22.35	171.79
		1912.50	22.76	188.80
5.0 MHZ BAND 16QAM		1852.50	21.29	134.59
		1882.50	21.25	133.35
		1912.50	21.66	146.55
10.0 MHZ BAND QPSK	50/0	1855.00	22.19	165.58
		1882.50	22.25	167.88
		1910.00	22.16	164.44
10.0 MHZ BAND 16QAM		1855.00	21.29	134.59
		1882.50	21.25	133.35
		1910.00	21.06	127.64

This report shall not be reproduced except in full, without the written approval of UL CCS.

7.1.1. CDMA2000 1xRTT

1xRTT 850 BAND (ERP)

High Frequency Substitution Measurement
Compliance Certification Services Chamber B

Company: LG
Project #: 13U14853
Date: 02/11/13
Test Engineer: Mona Hua
Configuration: EUT Only
Mode: CDMA 2000, 1xRTT, BC0, ERP

Test Equipment:
Receiving: Sunol T243, and Chamber B N-type Cable (Setup this one for testing EUT)
Substitution: Dipole S/N: 00022117, 4ft SMA Cable (SN # 208947003) Warehouse.

f MHz	SG reading (dBm)	Ant. Pol. (H/V)	Cable Loss (dB)	Antenna Gain (dBd)	ERP (dBm)	Limit (dBm)	Margin (dB)	Notes
Low Ch								
824.70	24.65	V	0.5	0.0	24.15	38.5	-14.3	
824.70	10.30	H	0.5	0.0	9.80	38.5	-28.6	
Mid Ch								
836.52	24.70	V	0.5	0.0	24.20	38.5	-14.2	
836.52	9.70	H	0.5	0.0	9.20	38.5	-29.2	
High Ch								
848.31	25.50	V	0.5	0.0	25.00	38.5	-13.4	
848.31	11.00	H	0.5	0.0	10.50	38.5	-27.9	

This report shall not be reproduced except in full, without the written approval of UL CCS.

EVDO REV A 850 BAND (ERP)

High Frequency Substitution Measurement
Compliance Certification Services Chamber B

Company: LG
Project #: 13U14853
Date: 02/12/13
Test Engineer: Mona Hua
Configuration: EUT Only
Mode: CDMA 2000, EvDo, BC0, ERP

Test Equipment:
Receiving: Sunol T243, and Chamber B N-type Cable (Setup this one for testing EUT)
Substitution: Dipole S/N: 00022117, 4ft SMA Cable (SN # 208947003) Warehouse.

f MHz	SG reading (dBm)	Ant. Pol. (H/V)	Cable Loss (dB)	Antenna Gain (dBd)	ERP (dBm)	Limit (dBm)	Margin (dB)	Notes
Low Ch								
824.70	25.70	V	0.5	0.0	25.20	38.5	-13.2	
824.70	13.50	H	0.5	0.0	13.00	38.5	-25.4	
Mid Ch								
836.52	25.22	V	0.5	0.0	24.72	38.5	-13.7	
836.52	14.00	H	0.5	0.0	13.50	38.5	-24.9	
High Ch								
848.31	25.60	V	0.5	0.0	25.10	38.5	-13.3	
848.31	14.20	H	0.5	0.0	13.70	38.5	-24.7	

This report shall not be reproduced except in full, without the written approval of UL CCS.

1xRTT 1900 BAND (EIRP)

High Frequency Fundamental Measurement
Compliance Certification Services Chamber B

Company: LG
Project #: 13U14853
Date: 02/11/13
Test Engineer: Mona Hua
Configuration: EUT with AC adapter and headphone
Mode: CDMA 2000, 1xRTT, BC1, EIRP

Test Equipment:
Receiving: Horn T59, and Chamber B SMA Cables
Substitution: Horn T217 Substitution, 4ft SMA Cable (244639001) Warehouse

f GHz	SG reading (dBm)	Ant. Pol. (H/V)	Cable Loss (dB)	Antenna Gain (dBi)	EIRP (dBm)	Limit (dBm)	Delta (dB)	Notes
Low Ch								
1.851	21.2	V	0.85	8.05	28.40	33.0	-4.6	
1.851	17.0	H	0.85	7.89	24.04	33.0	-9.0	
Mid Ch								
1.880	21.0	V	0.85	8.10	28.25	33.0	-4.8	
1.880	17.8	H	0.85	7.88	24.83	33.0	-8.2	
High Ch								
1.909	21.3	V	0.85	8.19	28.64	33.0	-4.4	
1.909	16.2	H	0.85	7.95	23.30	33.0	-9.7	

This report shall not be reproduced except in full, without the written approval of UL CCS.

EVDO REV A 1900 BAND (EIRP)

High Frequency Fundamental Measurement
Compliance Certification Services Chamber B

Company: LG
Project #: 13U14853
Date: 02/12/13
Test Engineer: Mona Hua
Configuration: EUT with AC adapter and headset
Mode: CDMA 2000, EvDo, BC1, EIRP

Test Equipment:
Receiving: Horn T59, and Chamber B SMA Cables
Substitution: Horn T217 Substitution, 4ft SMA Cable (244639001) Warehouse

f GHz	SG reading (dBm)	Ant. Pol. (H/V)	Cable Loss (dB)	Antenna Gain (dBi)	EIRP (dBm)	Limit (dBm)	Delta (dB)	Notes
Low Ch								
1.851	22.1	V	0.85	8.05	29.30	33.0	-3.7	
1.851	18.8	H	0.85	7.89	25.84	33.0	-7.2	
Mid Ch								
1.880	22.1	V	0.85	8.10	29.35	33.0	-3.7	
1.880	20.3	H	0.85	7.88	27.33	33.0	-5.7	
High Ch								
1.909	22.0	V	0.85	8.19	29.34	33.0	-3.7	
1.909	19.5	H	0.85	7.95	26.60	33.0	-6.4	

This report shall not be reproduced except in full, without the written approval of UL CCS.

1xRTT 1700 BAND (EIRP)

High Frequency Fundamental Measurement
Compliance Certification Services Chamber B

Company: LG
Project #: 13U14853
Date: 02/11/13
Test Engineer: Mona Hua
Configuration: EUT with AC adapter and headphone
Mode: CDMA 2000, 1xRTT, BC15, EIRP

Test Equipment:
Receiving: Horn T59, and Chamber B SMA Cables
Substitution: Horn T217 Substitution, 4ft SMA Cable (244639001) Warehouse

f GHz	SG reading (dBm)	Ant. Pol. (H/V)	Cable Loss (dB)	Antenna Gain (dBi)	EIRP (dBm)	Limit (dBm)	Delta (dB)	Notes
Low Ch								
1.711	17.6	V	0.85	8.35	25.10	30.0	-4.9	
1.711	14.3	H	0.85	8.45	21.90	30.0	-8.1	
Mid Ch								
1.733	19.2	V	0.85	8.27	26.62	30.0	-3.4	
1.733	15.7	H	0.85	8.34	23.19	30.0	-6.8	
High Ch								
1.754	19.5	V	0.85	8.18	26.83	30.0	-3.2	
1.754	15.8	H	0.85	8.23	23.18	30.0	-6.8	

This report shall not be reproduced except in full, without the written approval of UL CCS.

EVDO REV A, 1700 BAND (EIRP)

High Frequency Fundamental Measurement
Compliance Certification Services Chamber B

Company: LG
Project #: 13U14853
Date: 02/12/13
Test Engineer: Mona Hua
Configuration: EUT with AC adapter and headset
Mode: CDMA 2000, EvDo, BC15, EIRP

Test Equipment:
Receiving: Horn T59, and Chamber B SMA Cables
Substitution: Horn T217 Substitution, 4ft SMA Cable (244639001) Warehouse

f GHz	SG reading (dBm)	Ant. Pol. (H/V)	Cable Loss (dB)	Antenna Gain (dBi)	EIRP (dBm)	Limit (dBm)	Delta (dB)	Notes
Low Ch								
1.711	19.0	V	0.85	8.35	26.50	30.0	-3.5	
1.711	15.0	H	0.85	8.45	22.60	30.0	-7.4	
Mid Ch								
1.733	19.6	V	0.85	8.27	27.02	30.0	-3.0	
1.733	15.9	H	0.85	8.34	23.39	30.0	-6.6	
High Ch								
1.754	19.8	V	0.85	8.18	27.13	30.0	-2.9	
1.754	17.4	H	0.85	8.23	24.78	30.0	-5.2	

This report shall not be reproduced except in full, without the written approval of UL CCS.

7.1.2. LTE Band 2

1.4MHz BAND WIDTH QPSK (EIRP)

High Frequency Fundamental Measurement
Compliance Certification Services Chamber B

Company: LG
Project #: 13U14853
Date: 02/13/13
Test Engineer: Mona Hua
Configuration: EUT with AC adapter and headset
Mode: LTE band 2, 1.4MHz BW
QPSK, Peak, RB6-0

Test Equipment:
Receiving: Horn T59, and Chamber B SMA Cables
Substitution: Horn T217 Substitution, 4ft SMA Cable (244639001) Warehouse

f GHz	SG reading (dBm)	Ant. Pol. (H/V)	Cable Loss (dB)	Antenna Gain (dBi)	EIRP (dBm)	Limit (dBm)	Delta (dB)	Notes
Low Ch								
1.851	16.7	V	0.85	8.05	23.88	33.0	-9.1	
1.851	13.5	H	0.85	7.89	20.49	33.0	-12.5	
Mid Ch								
1.880	16.3	V	0.85	8.10	23.55	33.0	-9.5	
1.880	12.9	H	0.85	7.88	19.93	33.0	-13.1	
High Ch								
1.909	15.9	V	0.85	8.19	23.24	33.0	-9.8	
1.909	12.8	H	0.85	7.95	19.90	33.0	-13.1	

Rev. 3.17.11

This report shall not be reproduced except in full, without the written approval of UL CCS.

1.4MHz BAND WIDTH 16QAM (EIRP)

High Frequency Fundamental Measurement
Compliance Certification Services Chamber B

Company: LG
Project #: 13U14853
Date: 02/13/13
Test Engineer: Mona Hua
Configuration: EUT with AC adapter and headset
Mode: LTE band 2, 1.4MHz BW
16QAM, Peak, RB6-0

Test Equipment:
Receiving: Horn T59, and Chamber B SMA Cables
Substitution: Horn T217 Substitution, 4ft SMA Cable (244639001) Warehouse

f GHz	SG reading (dBm)	Ant. Pol. (H/V)	Cable Loss (dB)	Antenna Gain (dBi)	EIRP (dBm)	Limit (dBm)	Delta (dB)	Notes
Low Ch								
1.851	15.8	V	0.85	8.05	23.00	33.0	-10.0	
1.851	12.4	H	0.85	7.89	19.44	33.0	-13.6	
Mid Ch								
1.880	15.3	V	0.85	8.10	22.55	33.0	-10.5	
1.880	11.8	H	0.85	7.88	18.83	33.0	-14.2	
High Ch								
1.909	15.0	V	0.85	8.19	22.34	33.0	-10.7	
1.909	11.5	H	0.85	7.95	18.60	33.0	-14.4	

Rev. 3.17.11

3.0MHz BAND WIDTH QPSK (EIRP)

High Frequency Fundamental Measurement
Compliance Certification Services Chamber B

Company: LG
Project #: 13U14853
Date: 02/13/13
Test Engineer: Mona Hua
Configuration: EUT with Headset and AC Adapter
Mode: LTE band 2, 3MHz BW
QPSK, Peak, RB15-0

Test Equipment:
Receiving: Horn T59, and Chamber B SMA Cables
Substitution: Horn T217 Substitution, 4ft SMA Cable (244639001) Warehouse

f GHz	SG reading (dBm)	Ant. Pol. (H/V)	Cable Loss (dB)	Antenna Gain (dBi)	EIRP (dBm)	Limit (dBm)	Delta (dB)	Notes
Low Ch								
1.852	16.4	V	0.85	8.05	23.60	33.0	-9.4	
1.852	14.0	H	0.85	7.89	20.99	33.0	-12.0	
Mid Ch								
1.880	16.8	V	0.85	8.10	24.05	33.0	-9.0	
1.880	13.6	H	0.85	7.88	20.63	33.0	-12.4	
High Ch								
1.909	16.2	V	0.85	8.19	23.54	33.0	-9.5	
1.909	14.0	H	0.85	7.95	21.10	33.0	-11.9	

Rev. 3.17.11

This report shall not be reproduced except in full, without the written approval of UL CCS.

3.0MHz BAND WIDTH 16QAM (EIRP)

High Frequency Fundamental Measurement
Compliance Certification Services Chamber B

Company: LG
Project #: 13U14853
Date: 02/13/13
Test Engineer: Mona Hua
Configuration: EUT with Headset and AC Adapter
Mode: LTE band 2, 3MHz BW
16QAM, Peak, RB15-0

Test Equipment:
Receiving: Horn T59, and Chamber B SMA Cables
Substitution: Horn T217 Substitution, 4ft SMA Cable (244639001) Warehouse

f GHz	SG reading (dBm)	Ant. Pol. (H/V)	Cable Loss (dB)	Antenna Gain (dBi)	EIRP (dBm)	Limit (dBm)	Delta (dB)	Notes
Low Ch								
1.852	15.4	V	0.85	8.05	22.60	33.0	-10.4	
1.852	13.0	H	0.85	7.89	20.04	33.0	-13.0	
Mid Ch								
1.880	15.9	V	0.85	8.10	23.14	33.0	-9.9	
1.880	12.6	H	0.85	7.88	19.63	33.0	-13.4	
High Ch								
1.909	15.1	V	0.85	8.19	22.44	33.0	-10.6	
1.909	12.6	H	0.85	7.95	19.70	33.0	-13.3	

Rev. 3.17.11

5.0MHz BAND WIDTH QPSK (EIRP)

High Frequency Fundamental Measurement
Compliance Certification Services Chamber B

Company: LG
Project #: 13U14853
Date: 02/13/13
Test Engineer: Mona Hua
Configuration: EUT with AC adapter and headset
Mode: LTE band 2, 5MHz BW
QPSK, Peak, RB25-0

Test Equipment:
Receiving: Horn T59, and Chamber B SMA Cables
Substitution: Horn T217 Substitution, 4ft SMA Cable (244639001) Warehouse

f GHz	SG reading (dBm)	Ant. Pol. (H/V)	Cable Loss (dB)	Antenna Gain (dBi)	EIRP (dBm)	Limit (dBm)	Delta (dB)	Notes
Low Ch								
1.853	16.6	V	0.85	8.05	23.80	33.0	-9.2	
1.853	11.3	H	0.85	7.89	18.34	33.0	-14.7	
Mid Ch								
1.880	16.8	V	0.85	8.10	24.05	33.0	-9.0	
1.880	11.0	H	0.85	7.88	18.03	33.0	-15.0	
High Ch								
1.908	16.7	V	0.85	8.19	24.04	33.0	-9.0	
1.908	12.7	H	0.85	7.95	19.80	33.0	-13.2	

Rev. 3.17.11

This report shall not be reproduced except in full, without the written approval of UL CCS.

5.0MHz BAND WIDTH 16QAM (EIRP)

High Frequency Fundamental Measurement
Compliance Certification Services Chamber B

Company: LG
Project #: 13U14853
Date: 02/13/13
Test Engineer: Mona Hua
Configuration: EUT with AC adapter and headset
Mode: LTE band 2, 5MHz BW
16QAM, Peak, RB25-0

Test Equipment:
Receiving: Horn T59, and Chamber B SMA Cables
Substitution: Horn T217 Substitution, 4ft SMA Cable (244639001) Warehouse

f GHz	SG reading (dBm)	Ant. Pol. (H/V)	Cable Loss (dB)	Antenna Gain (dBi)	EIRP (dBm)	Limit (dBm)	Delta (dB)	Notes
Low Ch								
1.853	15.7	V	0.85	8.05	22.90	33.0	-10.1	
1.853	10.4	H	0.85	7.89	17.44	33.0	-15.6	
Mid Ch								
1.880	15.8	V	0.85	8.10	23.05	33.0	-10.0	
1.880	10.1	H	0.85	7.88	17.13	33.0	-15.9	
High Ch								
1.908	15.8	V	0.85	8.19	23.14	33.0	-9.9	
1.908	11.5	H	0.85	7.95	18.60	33.0	-14.4	

Rev. 3.17.11

10.0MHz BAND WIDTH QPSK (EIRP)

High Frequency Fundamental Measurement
Compliance Certification Services Chamber B

Company: LG
Project #: 13U14853
Date: 02/13/13
Test Engineer: Mona Hua
Configuration: EUT with AC adapter and headset
Mode: LTE band 2, 10MHz BW
QPSK, Peak, RB50-0

Test Equipment:
Receiving: Horn T59, and Chamber B SMA Cables
Substitution: Horn T217 Substitution, 4ft SMA Cable (244639001) Warehouse

f GHz	SG reading (dBm)	Ant. Pol. (H/V)	Cable Loss (dB)	Antenna Gain (dBi)	EIRP (dBm)	Limit (dBm)	Delta (dB)	Notes
Low Ch								
1.855	16.5	V	0.85	8.05	23.70	33.0	-9.3	
1.855	12.0	H	0.85	7.89	19.04	33.0	-14.0	
Mid Ch								
1.880	16.6	V	0.85	8.10	23.85	33.0	-9.2	
1.880	12.8	H	0.85	7.88	19.83	33.0	-13.2	
High Ch								
1.905	16.5	V	0.85	8.19	23.84	33.0	-9.2	
1.905	12.9	H	0.85	7.95	20.00	33.0	-13.0	

Rev. 3.17.11

This report shall not be reproduced except in full, without the written approval of UL CCS.

10.0MHz BAND WIDTH 16QAM (EIRP)

High Frequency Fundamental Measurement
Compliance Certification Services Chamber B

Company: LG
Project #: 13U14853
Date: 02/13/13
Test Engineer: Mona Hua
Configuration: EUT with AC adapter and headset
Mode: LTE band 2, 10MHz BW
16QAM, Peak, RB50-0

Test Equipment:
Receiving: Horn T59, and Chamber B SMA Cables
Substitution: Horn T217 Substitution, 4ft SMA Cable (244639001) Warehouse

f GHz	SG reading (dBm)	Ant. Pol. (H/V)	Cable Loss (dB)	Antenna Gain (dBi)	EIRP (dBm)	Limit (dBm)	Delta (dB)	Notes
Low Ch								
1.855	15.6	V	0.85	8.05	22.80	33.0	-10.2	
1.855	8.8	H	0.85	7.89	15.84	33.0	-17.2	
Mid Ch								
1.880	15.7	V	0.85	8.10	22.95	33.0	-10.1	
1.880	11.7	H	0.85	7.88	18.73	33.0	-14.3	
High Ch								
1.905	15.6	V	0.85	8.19	22.94	33.0	-10.1	
1.905	11.9	H	0.85	7.95	19.00	33.0	-14.0	

Rev. 3.17.11

This report shall not be reproduced except in full, without the written approval of UL CCS.

7.1.3. LTE Band 4

1.4MHz BAND WIDTH QPSK (EIRP)

High Frequency Fundamental Measurement
Compliance Certification Services Chamber B

Company: LG
Project #: 13U14853
Date: 02/14/13
Test Engineer: Mona Hua
Configuration: EUT with AC adapter only
Mode: LTE band 4, 1.4MHz BW
QPSK, Peak, RB6-0

Test Equipment:
Receiving: Horn T59, and Chamber B SMA Cables
Substitution: Horn T217 Substitution, 4ft SMA Cable (244639001) Warehouse

f GHz	SG reading (dBm)	Ant. Pol. (H/V)	Cable Loss (dB)	Antenna Gain (dBi)	EIRP (dBm)	Limit (dBm)	Delta (dB)	Notes
Low Ch								
1.711	15.3	V	0.85	8.35	22.80	30.0	-7.2	
1.711	9.1	H	0.85	8.45	16.70	30.0	-13.3	
Mid Ch								
1.733	15.3	V	0.85	8.27	22.72	30.0	-7.3	
1.733	10.0	H	0.85	8.34	17.49	30.0	-12.5	
High Ch								
1.754	15.7	V	0.85	8.18	23.03	30.0	-7.0	
1.754	10.4	H	0.85	8.23	17.78	30.0	-12.2	

Rev. 3.17.11

This report shall not be reproduced except in full, without the written approval of UL CCS.

1.4MHz BAND WIDTH 16QAM (EIRP)

High Frequency Fundamental Measurement
Compliance Certification Services Chamber B

Company: LG
Project #: 13U14853
Date: 02/14/13
Test Engineer: Mona Hua
Configuration: EUT with AC adapter only
Mode: LTE band 4, 1.4MHz BW
16QAM, Peak, RB6-0

Test Equipment:
Receiving: Horn T59, and Chamber B SMA Cables
Substitution: Horn T217 Substitution, 4ft SMA Cable (244639001) Warehouse

f GHz	SG reading (dBm)	Ant. Pol. (H/V)	Cable Loss (dB)	Antenna Gain (dBi)	EIRP (dBm)	Limit (dBm)	Delta (dB)	Notes
Low Ch								
1.711	14.4	V	0.85	8.35	21.90	30.0	-8.1	
1.711	8.4	H	0.85	8.45	16.00	30.0	-14.0	
Mid Ch								
1.733	14.3	V	0.85	8.27	21.72	30.0	-8.3	
1.733	9.0	H	0.85	8.34	16.49	30.0	-13.5	
High Ch								
1.754	14.8	V	0.85	8.18	22.13	30.0	-7.9	
1.754	9.5	H	0.85	8.23	16.88	30.0	-13.1	

Rev. 3.17.11

This report shall not be reproduced except in full, without the written approval of UL CCS.

3.0MHz BAND WIDTH QPSK (EIRP)

High Frequency Fundamental Measurement
Compliance Certification Services Chamber B

Company: LG
Project #: 13U14853
Date: 02/14/13
Test Engineer: Mona Hua
Configuration: EUT with AC adapter only
Mode: LTE band 4, 3MHz BW
QPSK, Peak, RB15-0

Test Equipment:
Receiving: Horn T59, and Chamber B SMA Cables
Substitution: Horn T217 Substitution, 4ft SMA Cable (244639001) Warehouse

f GHz	SG reading (dBm)	Ant. Pol. (H/V)	Cable Loss (dB)	Antenna Gain (dBi)	EIRP (dBm)	Limit (dBm)	Delta (dB)	Notes
Low Ch								
1.712	15.5	V	0.85	8.35	23.00	30.0	-7.0	
1.712	14.0	H	0.85	8.45	21.60	30.0	-8.4	
Mid Ch								
1.733	15.2	V	0.85	8.27	22.62	30.0	-7.4	
1.733	14.2	H	0.85	8.34	21.69	30.0	-8.3	
High Ch								
1.754	15.6	V	0.85	8.18	22.93	30.0	-7.1	
1.754	14.3	H	0.85	8.23	21.68	30.0	-8.3	

Rev. 3.17.11

3.0MHz BAND WIDTH 16QAM (EIRP)

High Frequency Fundamental Measurement
Compliance Certification Services Chamber B

Company: LG
Project #: 13U14853
Date: 02/14/13
Test Engineer: Mona Hua
Configuration: EUT with AC adapter only
Mode: LTE band 4, 3MHz BW
16QAM, Peak, RB15-0

Test Equipment:
Receiving: Horn T59, and Chamber B SMA Cables
Substitution: Horn T217 Substitution, 4ft SMA Cable (244639001) Warehouse

f GHz	SG reading (dBm)	Ant. Pol. (H/V)	Cable Loss (dB)	Antenna Gain (dBi)	EIRP (dBm)	Limit (dBm)	Delta (dB)	Notes
Low Ch								
1.712	14.5	V	0.85	8.35	22.00	30.0	-8.0	
1.712	12.5	H	0.85	8.45	20.10	30.0	-9.9	
Mid Ch								
1.733	14.0	V	0.85	8.27	21.42	30.0	-8.6	
1.733	13.1	H	0.85	8.34	20.59	30.0	-9.4	
High Ch								
1.754	14.5	V	0.85	8.18	21.83	30.0	-8.2	
1.754	13.0	H	0.85	8.23	20.38	30.0	-9.6	

Rev. 3.17.11

This report shall not be reproduced except in full, without the written approval of UL CCS.

5.0MHz BAND WIDTH QPSK (EIRP)

High Frequency Fundamental Measurement
Compliance Certification Services Chamber B

Company: LG
Project #: 13U14853
Date: 02/14/13
Test Engineer: Mona Hua
Configuration: EUT with AC adapter only
Mode: LTE band 4, 5MHz BW
QPSK, Peak, RB25-0

Test Equipment:
Receiving: Horn T59, and Chamber B SMA Cables
Substitution: Horn T217 Substitution, 4ft SMA Cable (244639001) Warehouse

f GHz	SG reading (dBm)	Ant. Pol. (H/V)	Cable Loss (dB)	Antenna Gain (dBi)	EIRP (dBm)	Limit (dBm)	Delta (dB)	Notes
Low Ch								
1.713	14.8	V	0.85	8.35	22.30	30.0	-7.7	
1.713	13.0	H	0.85	8.45	20.60	30.0	-9.4	
Mid Ch								
1.733	14.8	V	0.85	8.27	22.22	30.0	-7.8	
1.733	13.0	H	0.85	8.34	20.49	30.0	-9.5	
High Ch								
1.753	15.4	V	0.85	8.18	22.73	30.0	-7.3	
1.753	13.0	H	0.85	8.23	20.38	30.0	-9.6	

Rev. 3.17.11

5.0MHz BAND WIDTH 16QAM (EIRP)

High Frequency Fundamental Measurement
Compliance Certification Services Chamber B

Company: LG
Project #: 13U14853
Date: 02/14/13
Test Engineer: Mona Hua
Configuration: EUT with AC adapter only
Mode: LTE band 4, 5MHz BW
16QAM, Peak, RB25-0

Test Equipment:
Receiving: Horn T59, and Chamber B SMA Cables
Substitution: Horn T217 Substitution, 4ft SMA Cable (244639001) Warehouse

f GHz	SG reading (dBm)	Ant. Pol. (H/V)	Cable Loss (dB)	Antenna Gain (dBi)	EIRP (dBm)	Limit (dBm)	Delta (dB)	Notes
Low Ch								
1.713	13.8	V	0.85	8.35	21.30	30.0	-8.7	
1.713	12.0	H	0.85	8.45	19.60	30.0	-10.4	
Mid Ch								
1.733	13.8	V	0.85	8.27	21.22	30.0	-8.8	
1.733	12.0	H	0.85	8.34	19.49	30.0	-10.5	
High Ch								
1.753	14.4	V	0.85	8.18	21.73	30.0	-8.3	
1.753	12.0	H	0.85	8.23	19.38	30.0	-10.6	

Rev. 3.17.11

This report shall not be reproduced except in full, without the written approval of UL CCS.

10.0MHz BAND WIDTH QPSK (EIRP)

High Frequency Fundamental Measurement
Compliance Certification Services Chamber B

Company: LG
Project #: 13U14853
Date: 02/13/13
Test Engineer: Mona Hua
Configuration: EUT with AC adapter only
Mode: LTE band 4, 10MHz BW
QPSK, Peak, RB50-0

Test Equipment:
Receiving: Horn T59, and Chamber B SMA Cables
Substitution: Horn T217 Substitution, 4ft SMA Cable (244639001) Warehouse

f GHz	SG reading (dBm)	Ant. Pol. (H/V)	Cable Loss (dB)	Antenna Gain (dBi)	EIRP (dBm)	Limit (dBm)	Delta (dB)	Notes
Low Ch								
1.715	14.3	V	0.85	8.62	22.07	30.0	-7.9	
1.715	12.0	H	0.85	8.47	19.62	30.0	-10.4	
Mid Ch								
1.733	12.2	V	0.85	8.46	19.81	30.0	-10.2	
1.733	11.0	H	0.85	8.36	18.51	30.0	-11.5	
High Ch								
1.750	14.0	V	0.85	8.30	21.45	30.0	-8.6	
1.750	12.6	H	0.85	8.25	20.00	30.0	-10.0	

Rev. 3.17.11

This report shall not be reproduced except in full, without the written approval of UL CCS.

10.0MHz BAND WIDTH 16QAM (EIRP)

High Frequency Fundamental Measurement
Compliance Certification Services Chamber B

Company: LG
Project #: 13U14853
Date: 02/13/13
Test Engineer: Mona Hua
Configuration: EUT with AC adapter only
Mode: LTE band 4, 10MHz BW
16QAM, Peak, RB50-0

Test Equipment:
Receiving: Horn T59, and Chamber B SMA Cables
Substitution: Horn T217 Substitution, 4ft SMA Cable (244639001) Warehouse

f GHz	SG reading (dBm)	Ant. Pol. (H/V)	Cable Loss (dB)	Antenna Gain (dBi)	EIRP (dBm)	Limit (dBm)	Delta (dB)	Notes
Low Ch								
1.715	13.3	V	0.85	8.62	21.07	30.0	-8.9	
1.715	10.8	H	0.85	8.47	18.42	30.0	-11.6	
Mid Ch								
1.733	11.2	V	0.85	8.46	18.81	30.0	-11.2	
1.733	10.0	H	0.85	8.36	17.51	30.0	-12.5	
High Ch								
1.750	13.0	V	0.85	8.30	20.45	30.0	-9.6	
1.750	11.4	H	0.85	8.25	18.80	30.0	-11.2	

Rev. 3.17.11

This report shall not be reproduced except in full, without the written approval of UL CCS.

7.1.4. LTE Band 5

1.4MHz BAND WIDTH QPSK (ERP)

High Frequency Substitution Measurement
Compliance Certification Services Chamber B

Company: LG
Project #: 13U14853
Date: 02/15/13
Test Engineer: Mona Hua
Configuration: EUT only
Mode: LTE Band 5 , 1.4MHz BW
QPSK

Test Equipment:
Receiving: Sunol T243, and Chamber B N-type Cable (Setup this one for testing EUT)
Substitution: Dipole S/N: 00022117, 4ft SMA Cable (SN # 208947003) Warehouse.

f MHz	SG reading (dBm)	Ant. Pol. (H/V)	Cable Loss (dB)	Antenna Gain (dBd)	ERP (dBm)	Limit (dBm)	Margin (dB)	Notes
Low Ch								
824.70	22.60	V	0.6	0.0	22.00	38.5	-16.4	
824.70	10.50	H	0.6	0.0	9.90	38.5	-28.5	
Mid Ch								
836.50	22.30	V	0.6	0.0	21.70	38.5	-16.7	
836.50	14.00	H	0.6	0.0	13.40	38.5	-25.0	
High Ch								
848.30	21.70	V	0.6	0.0	21.10	38.5	-17.3	
848.30	15.20	H	0.6	0.0	14.60	38.5	-23.8	

Rev. 3.17.11

This report shall not be reproduced except in full, without the written approval of UL CCS.

1.4MHz BAND WIDTH 16QAM (ERP)

High Frequency Substitution Measurement
Compliance Certification Services Chamber B

Company: LG
Project #: 13U14853
Date: 02/15/13
Test Engineer: Mona Hua
Configuration: EUT only
Mode: LTE Band 5 , 1.4MHz BW
16QAM

Test Equipment:
Receiving: Sunol T243, and Chamber B N-type Cable (Setup this one for testing EUT)
Substitution: Dipole S/N: 00022117, 4ft SMA Cable (SN # 208947003) Warehouse.

f MHz	SG reading (dBm)	Ant. Pol. (H/V)	Cable Loss (dB)	Antenna Gain (dBd)	ERP (dBm)	Limit (dBm)	Margin (dB)	Notes
Low Ch								
824.70	21.60	V	0.6	0.0	21.00	38.5	-17.4	
824.70	9.70	H	0.6	0.0	9.10	38.5	-29.3	
Mid Ch								
836.50	21.20	V	0.6	0.0	20.60	38.5	-17.8	
836.50	13.00	H	0.6	0.0	12.40	38.5	-26.0	
High Ch								
848.30	20.50	V	0.6	0.0	19.90	38.5	-18.5	
848.30	14.10	H	0.6	0.0	13.50	38.5	-24.9	

Rev. 3.17.11

3.0MHz BAND WIDTH QPSK (ERP)

High Frequency Substitution Measurement
Compliance Certification Services Chamber B

Company: LG
Project #: 13U14853
Date: 02/15/13
Test Engineer: Mona Hua
Configuration: EUT only
Mode: LTE Band 5 , 3MHz BW
QPSK

Test Equipment:
Receiving: Sunol T243, and Chamber B N-type Cable (Setup this one for testing EUT)
Substitution: Dipole S/N: 00022117, 4ft SMA Cable (SN # 208947003) Warehouse.

f MHz	SG reading (dBm)	Ant. Pol. (H/V)	Cable Loss (dB)	Antenna Gain (dBd)	ERP (dBm)	Limit (dBm)	Margin (dB)	Notes
Low Ch								
825.50	22.50	V	0.6	0.0	21.90	38.5	-16.5	
825.50	14.10	H	0.6	0.0	13.50	38.5	-24.9	
Mid Ch								
836.50	22.10	V	0.6	0.0	21.50	38.5	-16.9	
836.50	14.40	H	0.6	0.0	13.80	38.5	-24.6	
High Ch								
847.50	21.90	V	0.6	0.0	21.30	38.5	-17.1	
847.50	14.00	H	0.6	0.0	13.40	38.5	-25.0	

Rev. 3.17.11

This report shall not be reproduced except in full, without the written approval of UL CCS.

3.0MHz BAND WIDTH 16QAM (ERP)

High Frequency Substitution Measurement
Compliance Certification Services Chamber B

Company: LG
Project #: 13U14853
Date: 02/15/13
Test Engineer: Mona Hua
Configuration: EUT only
Mode: LTE Band 5 , 3MHz BW
16QAM

Test Equipment:
Receiving: Sunol T243, and Chamber B N-type Cable (Setup this one for testing EUT)
Substitution: Dipole S/N: 00022117, 4ft SMA Cable (SN # 208947003) Warehouse.

f MHz	SG reading (dBm)	Ant. Pol. (H/V)	Cable Loss (dB)	Antenna Gain (dBd)	ERP (dBm)	Limit (dBm)	Margin (dB)	Notes
Low Ch								
825.50	21.40	V	0.6	0.0	20.80	38.5	-17.6	
825.50	14.00	H	0.6	0.0	13.40	38.5	-25.0	
Mid Ch								
836.50	21.00	V	0.6	0.0	20.40	38.5	-18.0	
836.50	13.50	H	0.6	0.0	12.90	38.5	-25.5	
High Ch								
847.50	20.80	V	0.6	0.0	20.20	38.5	-18.2	
847.50	13.00	H	0.6	0.0	12.40	38.5	-26.0	

Rev. 3.17.11

5.0MHz BAND WIDTH QPSK (ERP)

High Frequency Substitution Measurement
Compliance Certification Services Chamber B

Company: LG
Project #: 13U14853
Date: 02/15/13
Test Engineer: Mona Hua
Configuration: EUT only
Mode: LTE Band 5 , 5MHz BW
QPSK

Test Equipment:
Receiving: Sunol T243, and Chamber B N-type Cable (Setup this one for testing EUT)
Substitution: Dipole S/N: 00022117, 4ft SMA Cable (SN # 208947003) Warehouse.

f MHz	SG reading (dBm)	Ant. Pol. (H/V)	Cable Loss (dB)	Antenna Gain (dBd)	ERP (dBm)	Limit (dBm)	Margin (dB)	Notes
Low Ch								
826.50	22.13	V	0.6	0.0	21.53	38.5	-16.9	
826.50	12.10	H	0.6	0.0	11.50	38.5	-26.9	
Mid Ch								
836.50	21.90	V	0.6	0.0	21.30	38.5	-17.1	
836.50	12.60	H	0.6	0.0	12.00	38.5	-26.4	
High Ch								
846.50	22.30	V	0.6	0.0	21.70	38.5	-16.7	
846.50	12.40	H	0.6	0.0	11.80	38.5	-26.6	

Rev. 3.17.11

This report shall not be reproduced except in full, without the written approval of UL CCS.

5.0MHz BAND WIDTH 16QAM (ERP)

High Frequency Substitution Measurement
Compliance Certification Services Chamber B

Company: LG
Project #: 13U14853
Date: 02/15/13
Test Engineer: Mona Hua
Configuration: EUT only
Mode: LTE Band 5 , 5MHz BW
16QAM

Test Equipment:
Receiving: Sunol T243, and Chamber B N-type Cable (Setup this one for testing EUT)
Substitution: Dipole S/N: 00022117, 4ft SMA Cable (SN # 208947003) Warehouse.

f MHz	SG reading (dBm)	Ant. Pol. (H/V)	Cable Loss (dB)	Antenna Gain (dBd)	ERP (dBm)	Limit (dBm)	Margin (dB)	Notes
Low Ch								
826.50	21.10	V	0.6	0.0	20.50	38.5	-17.9	
826.50	11.00	H	0.6	0.0	10.40	38.5	-28.0	
Mid Ch								
836.50	20.80	V	0.6	0.0	20.20	38.5	-18.2	
836.50	11.50	H	0.6	0.0	10.90	38.5	-27.5	
High Ch								
846.50	21.30	V	0.6	0.0	20.70	38.5	-17.7	
846.50	11.40	H	0.6	0.0	10.80	38.5	-27.6	

Rev. 3.17.11

10.0MHz BAND WIDTH QPSK (ERP)

High Frequency Substitution Measurement
Compliance Certification Services Chamber B

Company: LG
Project #: 13U14853
Date: 02/15/13
Test Engineer: Mona Hua
Configuration: EUT only
Mode: LTE Band 5 , 10MHz BW
QPSK

Test Equipment:
Receiving: Sunol T243, and Chamber B N-type Cable (Setup this one for testing EUT)
Substitution: Dipole S/N: 00022117, 4ft SMA Cable (SN # 208947003) Warehouse.

f MHz	SG reading (dBm)	Ant. Pol. (H/V)	Cable Loss (dB)	Antenna Gain (dBd)	ERP (dBm)	Limit (dBm)	Margin (dB)	Notes
Low Ch								
829.00	21.40	V	0.6	0.0	20.80	38.5	-17.6	
829.00	17.00	H	0.6	0.0	16.40	38.5	-22.0	
Mid Ch								
836.50	21.90	V	0.6	0.0	21.30	38.5	-17.1	
836.50	16.70	H	0.6	0.0	16.10	38.5	-22.3	
High Ch								
844.00	21.60	V	0.6	0.0	21.00	38.5	-17.4	
844.00	17.40	H	0.6	0.0	16.80	38.5	-21.6	

Rev. 3.17.11

This report shall not be reproduced except in full, without the written approval of UL CCS.

10.0MHz BAND WIDTH 16QAM (ERP)

Compliance Certification Services Chamber B

Company: LG
Project #: 13U14853
Date: 02/15/13
Test Engineer: Mona Hua
Configuration: EUT only
Mode: LTE Band 5 , 10MHz BW
16QAM

Test Equipment:
Receiving: Sunol T243, and Chamber B N-type Cable (Setup this one for testing EUT)
Substitution: Dipole S/N: 00022117, 4ft SMA Cable (SN # 208947003) Warehouse.

f MHz	SG reading (dBm)	Ant. Pol. (H/V)	Cable Loss (dB)	Antenna Gain (dBd)	ERP (dBm)	Limit (dBm)	Margin (dB)	Notes
Low Ch								
829.00	20.40	V	0.6	0.0	19.80	38.5	-18.6	
829.00	16.00	H	0.6	0.0	15.40	38.5	-23.0	
Mid Ch								
836.50	20.90	V	0.6	0.0	20.30	38.5	-18.1	
836.50	15.80	H	0.6	0.0	15.20	38.5	-23.2	
High Ch								
844.00	20.50	V	0.6	0.0	19.90	38.5	-18.5	
844.00	16.50	H	0.6	0.0	15.90	38.5	-22.5	

Rev. 3.17.11

This report shall not be reproduced except in full, without the written approval of UL CCS.

7.1.5. LTE Band 12

1.4MHz BAND WIDTH QPSK (ERP)

High Frequency Substitution Measurement
Compliance Certification Services Chamber A

Company: LG
Project #: 13U14853
Date: 02/14/13
Test Engineer: Mona Hua
Configuration: EUT Only
Mode: TX, LTE band 5, 1.4MHz BW
QPSK, Peak, RB6-0

Test Equipment:
Receiving: Sunol T243, and Chamber A N-type Cable (Setup this one for testing EUT)
Substitution: Dipole S/N: 00022117, 6ft SMA Cable (SN # 208947003) Warehouse.

f MHz	SG reading (dBm)	Ant. Pol. (H/V)	Cable Loss (dB)	Antenna Gain (dBd)	ERP (dBm)	Limit (dBm)	Margin (dB)	Notes
Low Ch								
699.70	23.00	V	0.5	0.0	22.50	34.5	-12.0	
699.70	12.00	H	0.5	0.0	11.50	34.5	-23.0	
Mid Ch								
707.50	22.60	V	0.5	0.0	22.10	34.5	-12.4	
707.50	12.60	H	0.5	0.0	12.10	34.5	-22.4	
High Ch								
715.30	22.80	V	0.5	0.0	22.30	34.5	-12.2	
715.30	14.30	H	0.5	0.0	13.80	34.5	-20.7	

This report shall not be reproduced except in full, without the written approval of UL CCS.

1.4MHz BAND WIDTH 16QAM (ERP)

High Frequency Substitution Measurement
Compliance Certification Services Chamber A

Company: LG
Project #: 13U14853
Date: 02/14/13
Test Engineer: Mona Hua
Configuration: EUT Only
Mode: TX, LTE band 5, 1.4MHz BW
16QAM, Peak, RB6-0

Test Equipment:
Receiving: Sunol T243, and Chamber A N-type Cable (Setup this one for testing EUT)
Substitution: Dipole S/N: 00022117, 6ft SMA Cable (SN # 208947003) Warehouse.

f MHz	SG reading (dBm)	Ant. Pol. (H/V)	Cable Loss (dB)	Antenna Gain (dBd)	ERP (dBm)	Limit (dBm)	Margin (dB)	Notes
Low Ch								
699.70	21.70	V	0.5	0.0	21.20	34.8	-13.6	
699.70	13.00	H	0.5	0.0	12.50	34.8	-22.3	
Mid Ch								
707.50	21.50	V	0.5	0.0	21.00	34.8	-13.8	
707.50	12.50	H	0.5	0.0	12.00	34.8	-22.8	
High Ch								
715.30	21.10	V	0.5	0.0	20.60	34.8	-14.2	
715.30	13.00	H	0.5	0.0	12.50	34.8	-22.3	

3.0MHz BAND WIDTH QPSK (ERP)

High Frequency Substitution Measurement
Compliance Certification Services Chamber A

Company: LG
Project #: 13U14853
Date: 02/14/13
Test Engineer: Mona Hua
Configuration: EUT Only
Mode: TX, LTE band 12, 3MHz BW
QPSK, Peak, RB15-0

Test Equipment:
Receiving: Sunol T243, and Chamber A N-type Cable (Setup this one for testing EUT)
Substitution: Dipole S/N: 00022117, 6ft SMA Cable (SN # 208947003) Warehouse.

f MHz	SG reading (dBm)	Ant. Pol. (H/V)	Cable Loss (dB)	Antenna Gain (dBd)	ERP (dBm)	Limit (dBm)	Margin (dB)	Notes
Low Ch								
700.50	24.57	V	0.5	0.0	24.07	38.5	-14.4	
700.50	12.70	H	0.5	0.0	12.20	38.5	-26.2	
Mid Ch								
707.50	24.44	V	0.5	0.0	23.94	38.5	-14.5	
707.50	12.90	H	0.5	0.0	12.40	38.5	-26.1	
High Ch								
714.50	24.41	V	0.5	0.0	23.91	38.5	-14.5	
714.50	14.50	H	0.5	0.0	14.00	38.5	-24.4	

This report shall not be reproduced except in full, without the written approval of UL CCS.

3.0MHz BAND WIDTH 16QAM (ERP)

High Frequency Substitution Measurement
Compliance Certification Services Chamber A

Company: LG
Project #: 13U14853
Date: 02/14/13
Test Engineer: Mona Hua
Configuration: EUT Only
Mode: TX, LTE band 12, 3MHz BW
16QAM, Peak, RB15-0

Test Equipment:
Receiving: Sunol T243, and Chamber A N-type Cable (Setup this one for testing EUT)
Substitution: Dipole S/N: 00022117, 6ft SMA Cable (SN # 208947003) Warehouse.

f MHz	SG reading (dBm)	Ant. Pol. (H/V)	Cable Loss (dB)	Antenna Gain (dBd)	ERP (dBm)	Limit (dBm)	Margin (dB)	Notes
Low Ch								
700.50	23.37	V	0.5	0.0	22.87	38.5	-15.6	
700.50	11.90	H	0.5	0.0	11.40	38.5	-27.0	
Mid Ch								
707.50	22.84	V	0.5	0.0	22.34	38.5	-16.1	
707.50	11.80	H	0.5	0.0	11.30	38.5	-27.2	
High Ch								
714.50	23.21	V	0.5	0.0	22.71	38.5	-15.7	
714.50	13.40	H	0.5	0.0	12.90	38.5	-25.5	

5.0MHz BAND WIDTH QPSK (ERP)

High Frequency Substitution Measurement
Compliance Certification Services Chamber A

Company: LG
Project #: 13U14853
Date: 02/14/13
Test Engineer: Mona Hua
Configuration: EUT Only
Mode: TX, LTE band 12, 5MHz BW
QPSK, Peak, RB25-0

Test Equipment:
Receiving: Sunol T243, and Chamber A N-type Cable (Setup this one for testing EUT)
Substitution: Dipole S/N: 00022117, 6ft SMA Cable (SN # 208947003) Warehouse.

f MHz	SG reading (dBm)	Ant. Pol. (H/V)	Cable Loss (dB)	Antenna Gain (dBd)	ERP (dBm)	Limit (dBm)	Margin (dB)	Notes
Low Ch								
701.50	25.07	V	0.5	0.0	24.57	38.5	-13.9	
701.50	13.50	H	0.5	0.0	13.00	38.5	-25.4	
Mid Ch								
707.50	24.94	V	0.5	0.0	24.44	38.5	-14.0	
707.50	13.40	H	0.5	0.0	12.90	38.5	-25.6	
High Ch								
713.50	23.61	V	0.5	0.0	23.11	38.5	-15.3	
713.50	14.30	H	0.5	0.0	13.80	38.5	-24.6	

This report shall not be reproduced except in full, without the written approval of UL CCS.

5.0MHz BAND WIDTH 16QAM (ERP)

High Frequency Substitution Measurement
Compliance Certification Services Chamber A

Company: LG
Project #: 13U14853
Date: 02/14/13
Test Engineer: Mona Hua
Configuration: EUT Only
Mode: TX, LTE band 12, 5MHz BW
16QAM, Peak, RB25-0

Test Equipment:
Receiving: Sunol T243, and Chamber A N-type Cable (Setup this one for testing EUT)
Substitution: Dipole S/N: 00022117, 6ft SMA Cable (SN # 208947003) Warehouse.

f MHz	SG reading (dBm)	Ant. Pol. (H/V)	Cable Loss (dB)	Antenna Gain (dBd)	ERP (dBm)	Limit (dBm)	Margin (dB)	Notes
Low Ch								
701.50	23.47	V	0.5	0.0	22.97	38.5	-15.5	
701.50	12.30	H	0.5	0.0	11.80	38.5	-26.6	
Mid Ch								
707.50	23.54	V	0.5	0.0	23.04	38.5	-15.4	
707.50	12.10	H	0.5	0.0	11.60	38.5	-26.9	
High Ch								
713.50	22.41	V	0.5	0.0	21.91	38.5	-16.5	
713.50	13.00	H	0.5	0.0	12.50	38.5	-25.9	

10.0MHz BAND WIDTH QPSK (ERP)

High Frequency Substitution Measurement
Compliance Certification Services Chamber A

Company: LG
Project #: 13U14853
Date: 02/14/13
Test Engineer: Mona Hua
Configuration: EUT Only
Mode: TX, LTE band 12, 10MHz BW
QPSK, Peak

Test Equipment:
Receiving: Sunol T243, and Chamber A N-type Cable (Setup this one for testing EUT)
Substitution: Dipole S/N: 00022117, 6ft SMA Cable (SN # 208947003) Warehouse.

f MHz	SG reading (dBm)	Ant. Pol. (H/V)	Cable Loss (dB)	Antenna Gain (dBd)	ERP (dBm)	Limit (dBm)	Margin (dB)	Notes
Low Ch								
704.00	22.90	V	0.5	0.0	22.40	38.5	-16.0	
704.00	11.90	H	0.5	0.0	11.40	38.5	-27.0	
Mid Ch								
707.50	23.50	V	0.5	0.0	23.00	38.5	-15.4	
707.50	11.40	H	0.5	0.0	10.90	38.5	-27.5	
High Ch								
711.00	23.20	V	0.5	0.0	22.70	38.5	-15.7	
711.00	11.40	H	0.5	0.0	10.90	38.5	-27.5	

This report shall not be reproduced except in full, without the written approval of UL CCS.

10.0MHz BAND WIDTH 16QAM (ERP)

High Frequency Substitution Measurement
Compliance Certification Services Chamber A

Company: LG
Project #: 13U14853
Date: 02/14/13
Test Engineer: Mona Hua
Configuration: EUT Only
Mode: TX, LTE band 12, 10MHz BW
16QAM, Peak

Test Equipment:
Receiving: Sunol T243, and Chamber A N-type Cable (Setup this one for testing EUT)
Substitution: Dipole S/N: 00022117, 6ft SMA Cable (SN # 208947003) Warehouse.

f MHz	SG reading (dBm)	Ant. Pol. (H/V)	Cable Loss (dB)	Antenna Gain (dBd)	ERP (dBm)	Limit (dBm)	Margin (dB)	Notes
Low Ch								
704.00	21.50	V	0.5	0.0	21.00	38.5	-17.4	
704.00	10.60	H	0.5	0.0	10.10	38.5	-28.3	
Mid Ch								
707.50	22.50	V	0.5	0.0	22.00	38.5	-16.4	
707.50	9.50	H	0.5	0.0	9.00	38.5	-29.4	
High Ch								
711.00	22.00	V	0.5	0.0	21.50	38.5	-16.9	
711.00	11.00	H	0.5	0.0	10.50	38.5	-27.9	

This report shall not be reproduced except in full, without the written approval of UL CCS.

7.1.6. LTE Band 25

1.4MHz BAND WIDTH QPSK (EIRP)

High Frequency Fundamental Measurement
Compliance Certification Services Chamber B

Company: LG
Project #: 13U14853
Date: 02/14/13
Test Engineer: Mona Hua
Configuration: EUT with AC adapter and headset
Mode: LTE band 25, 1.4MHz BW
QPSK, Peak, RB6-0

Test Equipment:
Receiving: Horn T59, and Chamber B SMA Cables
Substitution: Horn T217 Substitution, 4ft SMA Cable (244639001) Warehouse

f GHz	SG reading (dBm)	Ant. Pol. (H/V)	Cable Loss (dB)	Antenna Gain (dBi)	EIRP (dBm)	Limit (dBm)	Delta (dB)	Notes
Low Ch								
1.851	13.3	V	0.85	8.62	21.07	33.0	-11.9	
1.851	8.4	H	0.85	8.47	16.02	33.0	-17.0	
Mid Ch								
1.883	13.6	V	0.85	8.46	21.21	33.0	-11.8	
1.883	9.0	H	0.85	8.36	16.51	33.0	-16.5	
High Ch								
1.914	14.7	V	0.85	8.30	22.15	33.0	-10.9	
1.914	9.2	H	0.85	8.25	16.60	33.0	-16.4	

Rev. 3.17.11

This report shall not be reproduced except in full, without the written approval of UL CCS.

1.4MHz BAND WIDTH 16QAM (EIRP)

High Frequency Fundamental Measurement
Compliance Certification Services Chamber B

Company: LG
Project #: 13U14853
Date: 02/14/13
Test Engineer: Mona Hua
Configuration: EUT with AC adapter and headset
Mode: LTE band 25, 1.4MHz BW
16QAM, Peak, RB6-0

Test Equipment:
Receiving: Horn T59, and Chamber B SMA Cables
Substitution: Horn T217 Substitution, 4ft SMA Cable (244639001) Warehouse

f GHz	SG reading (dBm)	Ant. Pol. (H/V)	Cable Loss (dB)	Antenna Gain (dBi)	EIRP (dBm)	Limit (dBm)	Delta (dB)	Notes
Low Ch								
1.851	12.3	V	0.85	8.62	20.07	33.0	-12.9	
1.851	7.3	H	0.85	8.47	14.92	33.0	-18.1	
Mid Ch								
1.883	12.5	V	0.85	8.46	20.11	33.0	-12.9	
1.883	8.0	H	0.85	8.36	15.51	33.0	-17.5	
High Ch								
1.914	13.5	V	0.85	8.30	20.95	33.0	-12.1	
1.914	8.3	H	0.85	8.25	15.70	33.0	-17.3	

Rev. 3.17.11

3.0MHz BAND WIDTH QPSK (EIRP)

High Frequency Fundamental Measurement
Compliance Certification Services Chamber B

Company: LG
Project #: 13U14853
Date: 02/14/13
Test Engineer: Mona Hua
Configuration: EUT with AC adapter and headset
Mode: LTE band 25, 3MHz BW
QPSK, Peak, RB15-0

Test Equipment:
Receiving: Horn T59, and Chamber B SMA Cables
Substitution: Horn T217 Substitution, 4ft SMA Cable (244639001) Warehouse

f GHz	SG reading (dBm)	Ant. Pol. (H/V)	Cable Loss (dB)	Antenna Gain (dBi)	EIRP (dBm)	Limit (dBm)	Delta (dB)	Notes
Low Ch								
1.852	14.3	V	0.85	8.62	22.07	33.0	-10.9	
1.852	13.3	H	0.85	8.47	20.92	33.0	-12.1	
Mid Ch								
1.883	14.6	V	0.85	8.46	22.21	33.0	-10.8	
1.883	12.9	H	0.85	8.36	20.41	33.0	-12.6	
High Ch								
1.914	15.0	V	0.85	8.30	22.45	33.0	-10.6	
1.914	13.7	H	0.85	8.25	21.10	33.0	-11.9	

Rev. 3.17.11

This report shall not be reproduced except in full, without the written approval of UL CCS.

3.0MHz BAND WIDTH 16QAM (EIRP)

High Frequency Fundamental Measurement
Compliance Certification Services Chamber B

Company: LG
Project #: 13U14853
Date: 02/14/13
Test Engineer: Mona Hua
Configuration: EUT with AC adapter and headset
Mode: LTE band 25, 3MHz BW
16QAM, Peak, RB15-0

Test Equipment:
Receiving: Horn T59, and Chamber B SMA Cables
Substitution: Horn T217 Substitution, 4ft SMA Cable (244639001) Warehouse

f GHz	SG reading (dBm)	Ant. Pol. (H/V)	Cable Loss (dB)	Antenna Gain (dBi)	EIRP (dBm)	Limit (dBm)	Delta (dB)	Notes
Low Ch								
1.852	13.2	V	0.85	8.62	20.97	33.0	-12.0	
1.852	12.0	H	0.85	8.47	19.62	33.0	-13.4	
Mid Ch								
1.883	13.5	V	0.85	8.46	21.11	33.0	-11.9	
1.883	11.9	H	0.85	8.36	19.41	33.0	-13.6	
High Ch								
1.914	14.0	V	0.85	8.30	21.45	33.0	-11.6	
1.914	12.6	H	0.85	8.25	20.00	33.0	-13.0	

Rev. 3.17.11

5.0MHz BAND WIDTH QPSK (EIRP)

High Frequency Fundamental Measurement
Compliance Certification Services Chamber B

Company: LG
Project #: 13U14853
Date: 02/14/13
Test Engineer: Mona Hua
Configuration: EUT with AC adapter and headset
Mode: LTE band 25, 5MHz BW
QPSK, RB25-0

Test Equipment:
Receiving: Horn T59, and Chamber B SMA Cables
Substitution: Horn T217 Substitution, 4ft SMA Cable (244639001) Warehouse

f GHz	SG reading (dBm)	Ant. Pol. (H/V)	Cable Loss (dB)	Antenna Gain (dBi)	EIRP (dBm)	Limit (dBm)	Delta (dB)	Notes
Low Ch								
1.853	15.0	V	0.85	8.04	22.19	33.0	-10.8	
1.853	12.1	H	0.85	7.90	19.15	33.0	-13.9	
Mid Ch								
1882.5	15.1	V	0.85	8.10	22.35	33.0	-10.7	
1882.5	11.8	H	0.85	7.88	18.83	33.0	-14.2	
High Ch								
1.913	15.4	V	0.85	8.21	22.76	33.0	-10.2	
1.913	12.0	H	0.85	7.98	19.13	33.0	-13.9	

Rev. 3.17.11

This report shall not be reproduced except in full, without the written approval of UL CCS.

5.0MHz BAND WIDTH 16QAM (EIRP)

High Frequency Fundamental Measurement
Compliance Certification Services Chamber B

Company: LG
Project #: 13U14853
Date: 02/14/13
Test Engineer: Mona Hua
Configuration: EUT with AC adapter and headset
Mode: LTE band 25, 5MHz BW
16QAM, RB25-0

Test Equipment:
Receiving: Horn T59, and Chamber B SMA Cables
Substitution: Horn T217 Substitution, 4ft SMA Cable (244639001) Warehouse

f GHz	SG reading (dBm)	Ant. Pol. (H/V)	Cable Loss (dB)	Antenna Gain (dBi)	EIRP (dBm)	Limit (dBm)	Delta (dB)	Notes
Low Ch								
1.853	14.1	V	0.85	8.04	21.29	33.0	-11.7	
1.853	11.0	H	0.85	7.90	18.05	33.0	-15.0	
Mid Ch								
1882.5	14.0	V	0.85	8.10	21.25	33.0	-11.8	
1882.5	10.7	H	0.85	7.88	17.73	33.0	-15.3	
High Ch								
1.913	14.3	V	0.85	8.21	21.66	33.0	-11.3	
1.913	11.0	H	0.85	7.98	18.13	33.0	-14.9	

Rev. 3.17.11

10.0MHz BAND WIDTH QPSK (EIRP)

High Frequency Fundamental Measurement
Compliance Certification Services Chamber B

Company: LG
Project #: 13U14853
Date: 02/14/13
Test Engineer: Mona Hua
Configuration: EUT with AC adapter and headset
Mode: LTE band 25, 10MHz BW
QPSK, RB50-0

Test Equipment:
Receiving: Horn T59, and Chamber B SMA Cables
Substitution: Horn T217 Substitution, 4ft SMA Cable (244639001) Warehouse

f GHz	SG reading (dBm)	Ant. Pol. (H/V)	Cable Loss (dB)	Antenna Gain (dBi)	EIRP (dBm)	Limit (dBm)	Delta (dB)	Notes
Low Ch								
1.855	15.0	V	0.85	8.04	22.19	33.0	-10.8	
1.855	12.0	H	0.85	7.90	19.05	33.0	-14.0	
Mid Ch								
1882.5	15.0	V	0.85	8.10	22.25	33.0	-10.8	
1882.5	12.5	H	0.85	7.88	19.53	33.0	-13.5	
High Ch								
1.910	14.8	V	0.85	8.21	22.16	33.0	-10.8	
1.910	13.0	H	0.85	7.98	20.13	33.0	-12.9	

Rev. 3.17.11

This report shall not be reproduced except in full, without the written approval of UL CCS.

10.0MHz BAND WIDTH 16QAM (EIRP)

High Frequency Fundamental Measurement
Compliance Certification Services Chamber B

Company: LG
Project #: 13U14853
Date: 02/14/13
Test Engineer: Mona Hua
Configuration: EUT with AC adapter and headset
Mode: LTE band 25, 10MHz BW
16QAM, RB50-0

Test Equipment:
Receiving: Horn T59, and Chamber B SMA Cables
Substitution: Horn T217 Substitution, 4ft SMA Cable (244639001) Warehouse

f GHz	SG reading (dBm)	Ant. Pol. (H/V)	Cable Loss (dB)	Antenna Gain (dBi)	EIRP (dBm)	Limit (dBm)	Delta (dB)	Notes
Low Ch								
1.855	14.1	V	0.85	8.04	21.29	33.0	-11.7	
1.855	11.0	H	0.85	7.90	18.05	33.0	-15.0	
Mid Ch								
1882.5	14.0	V	0.85	8.10	21.25	33.0	-11.8	
1882.5	11.4	H	0.85	7.88	18.43	33.0	-14.6	
High Ch								
1.910	13.7	V	0.85	8.21	21.06	33.0	-11.9	
1.910	12.0	H	0.85	7.98	19.13	33.0	-13.9	

Rev. 3.17.11

This report shall not be reproduced except in full, without the written approval of UL CCS.

7.2. FIELD STRENGTH OF SPURIOUS RADIATION

RULE PART(S)

FCC: §2.1053, §22.917, §24.238, & §27.53

LIMIT

§22.917 (e) and §24.238 (a): Out of band emissions. The power of any emission outside of the authorized operating frequency ranges must be attenuated below the transmitting power (P) by a factor of at least 43 + 10 log (P) dB.

§27.53 (g) For operations in the 698–746 MHz band, the power of any emission outside a licensee's frequency band(s) of operation shall be attenuated below the transmitter power (P) within the licensed band(s) of operation, measured in watts, by at least 43 + 10 log (P) dB.

§27.53 (h) For operations in the 1710–1755 MHz and 2110–2155 MHz bands, the power of any emission outside a licensee's frequency block shall be attenuated below the transmitter power (P) by at least 43 + 10 log10(P) dB.

TEST PROCEDURE

For Cellular equipment - Compliance with these rules is based on the use of measurement instrumentation employing a resolution bandwidth of 100 kHz or greater. In the 1 MHz bands immediately outside and adjacent to the frequency block a resolution bandwidth of at least one percent of the emission bandwidth of the fundamental emission of the transmitter may be employed. A narrower resolution bandwidth is permitted in all cases to improve measurement accuracy provided the measured power is integrated over the full required measurement bandwidth (i.e. 100 kHz or 1 percent of emission bandwidth, as specified). The emission bandwidth is defined as the width of the signal between two points, one below the carrier center frequency and one above the carrier center frequency, outside of which all emissions are attenuated at least 26 dB below the transmitter power.

For PCS equipment - Compliance with these rules is based on the use of measurement instrumentation employing a resolution bandwidth of 1 MHz or greater. However, in the 1 MHz bands immediately outside and adjacent to the frequency block a resolution bandwidth of at least one percent of the emission bandwidth of the fundamental emission of the transmitter may be employed. A narrower resolution bandwidth is permitted in all cases to improve measurement accuracy provided the measured power is integrated over the full required measurement bandwidth (i.e. 1 MHz or 1 percent of emission bandwidth, as specified). The emission bandwidth is defined as the width of the signal between two points, one below the carrier center frequency and one above the carrier center frequency, outside of which all emissions are attenuated at least 26 dB below the transmitter power.

MODES TESTED

- CDMA 2000 1xRTT
- CDMA 2000 EVDO REV. A
- LTE Band 2, 4, 5, 12, and 25

RESULTS

This report shall not be reproduced except in full, without the written approval of UL CCS.

7.2.1. CDMA2000

1xRTT 850MHz BAND (ERP)

Compliance Certification Services
Above 1GHz High Frequency Substitution Measurement

Company: LG
Project #: 13U14853
Date: 02/22/13
Test Engineer: Lieu Nguyen
Configuration: EUT with AC adapter and headphone
Mode: CDMA 2000, 1xRTT, BC0

Chamber	Pre-amplifer	Filter	Limit
5m Chamber B	T145 8449B	Filter 1	Part 22

f GHz	SG reading (dBm)	Ant. Pol. (H/V)	Distance (m)	Preamp (dB)	Filter (dB)	ERP (dBm)	Limit (dBm)	Delta (dB)	Notes
Low Ch, 824.7MHz									
1.649	-11.4	V	3.0	35.5	1.0	-45.9	-13.0	-32.9	
2.474	-16.4	V	3.0	35.4	1.0	-50.8	-13.0	-37.8	
1.649	-10.1	H	3.0	35.5	1.0	-44.6	-13.0	-31.6	
2.474	-13.4	H	3.0	35.4	1.0	-47.8	-13.0	-34.8	
Mid Ch, 836.52MHz									
1.673	-9.2	V	3.0	35.5	1.0	-43.7	-13.0	-30.7	
2.510	-11.1	V	3.0	35.4	1.0	-45.5	-13.0	-32.5	
1.673	-8.3	H	3.0	35.5	1.0	-42.9	-13.0	-29.9	
2.510	-16.2	H	3.0	35.4	1.0	-50.6	-13.0	-37.6	
High Ch, 848.31MHz									
1.697	-9.5	V	3.0	35.5	1.0	-44.0	-13.0	-31.0	
2.545	-5.3	V	3.0	35.4	1.0	-39.8	-13.0	-26.8	
1.697	-8.2	H	3.0	35.5	1.0	-42.7	-13.0	-29.7	
2.545	-10.1	H	3.0	35.4	1.0	-44.5	-13.0	-31.5	

Rev. 03.03.09
Note: No other emissions were detected above the system noise floor.

This report shall not be reproduced except in full, without the written approval of UL CCS.

EVDO REV A 850MHz BAND (ERP)

Compliance Certification Services
Above 1GHz High Frequency Substitution Measurement

Company: LG
Project #: 13U14853
Date: 02/12/13
Test Engineer: Mona Hua
Configuration: EUT with AC adapter and headphone
Mode: CDMA 2000, EVDO, BC0

Chamber	Pre-amplifer	Filter	Limit
5m Chamber B	T145 8449B	Filter 1	Part 22

f GHz	SG reading (dBm)	Ant. Pol. (H/V)	Distance (m)	Preamp (dB)	Filter (dB)	ERP (dBm)	Limit (dBm)	Delta (dB)	Notes
Low Ch, 824.7MHz									
1.649	-9.1	V	3.0	35.5	1.0	-43.6	-13.0	-30.6	
2.474	-9.7	V	3.0	35.4	1.0	-44.1	-13.0	-31.1	
1.649	-6.1	H	3.0	35.5	1.0	-40.6	-13.0	-27.6	
2.474	-9.6	H	3.0	35.4	1.0	-44.0	-13.0	-31.0	
Mid Ch, 836.52MHz									
1.673	-9.2	V	3.0	35.5	1.0	-43.7	-13.0	-30.7	
2.510	-11.1	V	3.0	35.4	1.0	-45.5	-13.0	-32.5	
1.673	-7.8	H	3.0	35.5	1.0	-42.4	-13.0	-29.4	
2.510	-10.1	H	3.0	35.4	1.0	-44.5	-13.0	-31.5	
High Ch, 848.31MHz									
1.697	-7.9	V	3.0	35.5	1.0	-42.4	-13.0	-29.4	
2.545	-8.4	V	3.0	35.4	1.0	-42.9	-13.0	-29.9	
1.697	-9.3	H	3.0	35.5	1.0	-43.8	-13.0	-30.8	
2.545	-6.3	H	3.0	35.4	1.0	-40.7	-13.0	-27.7	

Rev. 03.03.09
Note: No other emissions were detected above the system noise floor.

This report shall not be reproduced except in full, without the written approval of UL CCS.

1xRTT 1900MHz BAND (EIRP)

Compliance Certification Services
Above 1GHz High Frequency Substitution Measurement

Company: LG
Project #: 13U14853
Date: 02/22/13
Test Engineer: Lieu Nguyen
Configuration: EUT with AC adapter and headphone
Mode: CDMA 2000, 1xRTT, BC1

Chamber	Pre-amplifer	Filter	Limit
5m Chamber B	T145 8449B	Filter 1	Part 24

f GHz	SG reading (dBm)	Ant. Pol. (H/V)	Distance (m)	Preamp (dB)	Filter (dB)	EIRP (dBm)	Limit (dBm)	Delta (dB)	Notes
Low Ch, 1851.25MHz									
3.703	-3.7	V	3.0	35.4	1.0	-38.0	-13.0	-25.0	
5.554	-14.3	V	3.0	35.4	1.0	-48.7	-13.0	-35.7	
3.703	-3.4	H	3.0	35.4	1.0	-37.7	-13.0	-24.7	
5.554	-13.9	H	3.0	35.4	1.0	-48.3	-13.0	-35.3	
Mid Ch, 1880MHz									
3.760	-1.9	V	3.0	35.3	1.0	-36.3	-13.0	-23.3	
5.640	-16.8	V	3.0	35.4	1.0	-51.2	-13.0	-38.2	
3.760	-3.1	H	3.0	35.3	1.0	-37.4	-13.0	-24.4	
5.640	-14.7	H	3.0	35.4	1.0	-49.2	-13.0	-36.2	
High Ch, 1908.75MHz									
3.818	-2.5	V	3.0	35.3	1.0	-36.8	-13.0	-23.8	
5.726	-15.8	V	3.0	35.4	1.0	-50.3	-13.0	-37.3	
3.818	-3.9	H	3.0	35.3	1.0	-38.2	-13.0	-25.2	
5.726	-13.7	H	3.0	35.4	1.0	-48.1	-13.0	-35.1	

Rev. 03.03.09
Note: No other emissions were detected above the system noise floor.

This report shall not be reproduced except in full, without the written approval of UL CCS.

EVDO REV A, 1900MHz BAND (EIRP)

Compliance Certification Services
Above 1GHz High Frequency Substitution Measurement

Company: LG
Project #: 13U14853
Date: 02/12/13
Test Engineer: Mona Hua
Configuration: EUT with AC adapter and headphone
Mode: CDMA 2000, EVDO REV A, BC1

Chamber	Pre-amplifer	Filter	Limit
5m Chamber B	T145 8449B	Filter 1	Part 24

f GHz	SG reading (dBm)	Ant. Pol. (H/V)	Distance (m)	Preamp (dB)	Filter (dB)	EIRP (dBm)	Limit (dBm)	Delta (dB)	Notes
Low Ch, 1851.25MHz									
3.703	-1.4	V	3.0	35.4	1.0	-35.7	-13.0	-22.7	
5.554	-5.1	V	3.0	35.4	1.0	-39.5	-13.0	-26.5	
3.703	-0.2	H	3.0	35.4	1.0	-34.5	-13.0	-21.5	
5.554	-3.7	H	3.0	35.4	1.0	-38.1	-13.0	-25.1	
Mid Ch, 1880MHz									
3.760	-1.4	V	3.0	35.3	1.0	-35.8	-13.0	-22.8	
5.640	-7.2	V	3.0	35.4	1.0	-41.6	-13.0	-28.6	
3.760	-2.1	H	3.0	35.3	1.0	-36.4	-13.0	-23.4	
5.640	-5.4	H	3.0	35.4	1.0	-39.9	-13.0	-26.9	
High Ch, 1908.75MHz									
3.818	-2.1	V	3.0	35.3	1.0	-36.4	-13.0	-23.4	
5.726	-5.6	V	3.0	35.4	1.0	-40.1	-13.0	-27.1	
3.818	-3.0	H	3.0	35.3	1.0	-37.3	-13.0	-24.3	
5.726	-3.3	H	3.0	35.4	1.0	-37.7	-13.0	-24.7	

Rev. 03.03.09
Note: No other emissions were detected above the system noise floor.

This report shall not be reproduced except in full, without the written approval of UL CCS.

1xRTT 1700MHz BAND (EIRP)

Compliance Certification Services
Above 1GHz High Frequency Substitution Measurement

Company: LG
Project #: 13U14853
Date: 02/22/13
Test Engineer: Lieu Nguyen
Configuration: EUT with AC adapter and headphone
Mode: CDMA 2000, 1xRTT, BC15

Chamber	Pre-amplifer	Filter	Limit
5m Chamber B	T145 8449B	Filter 1	Part 27

f GHz	SG reading (dBm)	Ant. Pol. (H/V)	Distance (m)	Preamp (dB)	Filter (dB)	EIRP (dBm)	Limit (dBm)	Delta (dB)	Notes
Low Ch, 1711.25MHz									
3.423	0.3	V	3.0	35.5	1.0	-34.1	-13.0	-21.1	
5.134	-14.8	V	3.0	35.3	1.0	-49.1	-13.0	-36.1	
3.423	-4.6	H	3.0	35.5	1.0	-39.1	-13.0	-26.1	
5.134	-13.7	H	3.0	35.3	1.0	-48.0	-13.0	-35.0	
Mid Ch, 1732.5MHz									
3.465	-3.9	V	3.0	35.5	1.0	-38.4	-13.0	-25.4	
5.196	-14.7	V	3.0	35.3	1.0	-49.1	-13.0	-36.1	
3.465	0.0	H	3.0	35.5	1.0	-34.4	-13.0	-21.4	
5.196	-12.9	H	3.0	35.3	1.0	-47.2	-13.0	-34.2	
High Ch, 1753.75MHz									
3.508	-3.9	V	3.0	35.4	1.0	-38.4	-13.0	-25.4	
5.261	-16.5	V	3.0	35.3	1.0	-50.9	-13.0	-37.9	
3.508	-3.5	H	3.0	35.4	1.0	-38.0	-13.0	-25.0	
5.261	-14.6	H	3.0	35.3	1.0	-48.9	-13.0	-35.9	

Rev. 03.03.09
Note: No other emissions were detected above the system noise floor.

This report shall not be reproduced except in full, without the written approval of UL CCS.

EVDO REV A, 1700 BAND (EIRP)

Compliance Certification Services
Above 1GHz High Frequency Substitution Measurement

Company: LG
Project #: 13U14853
Date: 02/12/13
Test Engineer: Mona Hua
Configuration: EUT with AC adapter and headphone
Mode: CDMA 2000, EvDo, BC15

Chamber	Pre-amplifer	Filter	Limit
5m Chamber B	T145 8449B	Filter 1	Part 27

f GHz	SG reading (dBm)	Ant. Pol. (H/V)	Distance (m)	Preamp (dB)	Filter (dB)	EIRP (dBm)	Limit (dBm)	Delta (dB)	Notes
Low Ch, 1711.25MHz									
3.423	-4.1	V	3.0	35.5	1.0	-38.5	-13.0	-25.5	
6.845	-3.4	V	3.0	35.7	1.0	-38.1	-13.0	-25.1	
3.423	0.5	H	3.0	35.5	1.0	-34.0	-13.0	-21.0	
6.845	2.2	H	3.0	35.7	1.0	-32.5	-13.0	-19.5	
Mid Ch, 1732.5MHz									
3.465	-4.0	V	3.0	35.5	1.0	-38.5	-13.0	-25.5	
5.198	-5.4	V	3.0	35.3	1.0	-39.8	-13.0	-26.8	
3.465	2.5	H	3.0	35.5	1.0	-31.9	-13.0	-18.9	
6.930	0.4	H	3.0	35.7	1.0	-34.3	-13.0	-21.3	
High Ch, 1753.75MHz									
3.508	-4.3	V	3.0	35.4	1.0	-38.8	-13.0	-25.8	
5.261	-4.1	V	3.0	35.3	1.0	-38.5	-13.0	-25.5	
3.508	-0.5	H	3.0	35.4	1.0	-35.0	-13.0	-22.0	
5.261	-5.5	H	3.0	35.3	1.0	-39.8	-13.0	-26.8	

Rev. 03.03.09
Note: No other emissions were detected above the system noise floor.

This report shall not be reproduced except in full, without the written approval of UL CCS.

7.2.2. *LTE Band 2*

1.4MHz BAND WIDTH QPSK (EIRP)

Compliance Certification Services
Above 1GHz High Frequency Substitution Measurement

Company: LG
Project #: 13U14853
Date:01/29/2013 02/19/13
Test Engineer: Lieu Nguyen
Configuration: EUT with AC adapter
Mode: LTE Band 2, 1.4MHz QPSK

Chamber	Pre-amplifer	Filter	Limit
5m Chamber B	T145 8449B	Filter 1	Part 24

f GHz	SG reading (dBm)	Ant. Pol. (H/V)	Distance (m)	Preamp (dB)	Filter (dB)	ERP (dBm)	Limit (dBm)	Delta (dB)	Notes
Low Ch, (1850.7MHz)									
3.700	0.3	V	3.0	35.4	1.0	-34.0	-13.0	-21.0	
5.551	-12.2	V	3.0	35.4	1.0	-46.6	-13.0	-33.6	
3.700	8.6	H	3.0	35.4	1.0	-25.7	-13.0	-12.7	
5.551	-14.7	H	3.0	35.4	1.0	-49.1	-13.0	-36.1	
Mid Ch, (1880MHz)									
3.758	0.0	V	3.0	35.3	1.0	-34.4	-13.0	-21.4	
5.638	-12.8	V	3.0	35.4	1.0	-47.3	-13.0	-34.3	
3.758	4.2	H	3.0	35.3	1.0	-30.1	-13.0	-17.1	
5.638	-14.4	H	3.0	35.4	1.0	-48.9	-13.0	-35.9	
High Ch, (1909.3MHz)									
3.817	-0.5	V	3.0	35.3	1.0	-34.8	-13.0	-21.8	
5.726	-13.5	V	3.0	35.4	1.0	-48.0	-13.0	-35.0	
3.817	2.6	H	3.0	35.3	1.0	-31.7	-13.0	-18.7	
5.726	-15.5	H	3.0	35.4	1.0	-49.9	-13.0	-36.9	

Rev. 03.03.09
Note: No other emissions were detected above the system noise floor.

This report shall not be reproduced except in full, without the written approval of UL CCS.

1.4MHz BAND WIDTH 16QAM

Compliance Certification Services
Above 1GHz High Frequency Substitution Measurement

Company: LG
Project #: 13U14853
Date:01/29/2013 02/19/13
Test Engineer: Lieu Nguyen
Configuration: EUT with AC adapter
Mode: LTE Band 2, 1.4MHz 16QAM

Chamber	Pre-amplifer	Filter	Limit
5m Chamber B	T145 8449B	Filter 1	Part 24

f GHz	SG reading (dBm)	Ant. Pol. (H/V)	Distance (m)	Preamp (dB)	Filter (dB)	ERP (dBm)	Limit (dBm)	Delta (dB)	Notes
Low Ch, (1850.7MHz)									
3.700	-3.2	V	3.0	35.4	1.0	-37.5	-13.0	-24.5	
5.609	-10.0	V	3.0	35.4	1.0	-44.4	-13.0	-31.4	
3.700	8.0	H	3.0	35.4	1.0	-26.3	-13.0	-13.3	
5.609	-15.1	H	3.0	35.4	1.0	-49.5	-13.0	-36.5	
Mid Ch, (1880MHz)									
3.759	-1.3	V	3.0	35.3	1.0	-35.7	-13.0	-22.7	
3.638	-17.4	V	3.0	35.4	1.0	-51.8	-13.0	-38.8	
3.759	3.6	H	3.0	35.3	1.0	-30.7	-13.0	-17.7	
3.638	-19.9	H	3.0	35.4	1.0	-54.3	-13.0	-41.3	
High Ch, (1909.3MHz)									
3.817	1.0	V	3.0	35.3	1.0	-33.3	-13.0	-20.3	
5.726	-13.1	V	3.0	35.4	1.0	-47.6	-13.0	-34.6	
3.817	2.4	H	3.0	35.3	1.0	-31.9	-13.0	-18.9	
5.726	-15.5	H	3.0	35.4	1.0	-49.9	-13.0	-36.9	

Rev. 03.03.09
Note: No other emissions were detected above the system noise floor.

This report shall not be reproduced except in full, without the written approval of UL CCS.

3.0MHz BAND WIDTH QPSK (EIRP)

Compliance Certification Services
Above 1GHz High Frequency Substitution Measurement

Company: LG
Project #: 13U14853
Date: 02/19/13
Test Engineer: Mona Hua
Configuration: EUT and AC Adapter
Mode: LTE Band 2, 3MHz QPSK

Chamber	Pre-amplifer	Filter	Limit
3M Chamber	T34 8449B	Filter 1	Part 24

f GHz	SG reading (dBm)	Ant. Pol. (H/V)	Distance (m)	Preamp (dB)	Filter (dB)	EIRP (dBm)	Limit (dBm)	Delta (dB)	Notes
Low Ch, (1851.5MHz)									
3.701	9.8	V	3.0	35.4	1.0	-24.6	-13.0	-11.6	
5.551	-11.9	V	3.0	34.7	1.0	-45.6	-13.0	-32.6	
3.701	8.7	H	3.0	35.4	1.0	-25.7	-13.0	-12.7	
5.551	-13.8	H	3.0	34.7	1.0	-47.5	-13.0	-34.5	
Mid Ch, (1880MHz)									
3.757	7.0	V	3.0	35.3	1.0	-27.4	-13.0	-14.4	
5.636	-11.5	V	3.0	34.7	1.0	-45.2	-13.0	-32.2	
3.757	4.8	H	3.0	35.3	1.0	-29.5	-13.0	-16.5	
5.636	-13.2	H	3.0	34.7	1.0	-47.0	-13.0	-34.0	
High Ch, (1908.5MHz)									
3.814	2.5	V	3.0	35.3	1.0	-31.8	-13.0	-18.8	
5.722	-15.6	V	3.0	34.7	1.0	-49.4	-13.0	-36.4	
3.814	3.0	H	3.0	35.3	1.0	-31.3	-13.0	-18.3	
5.722	-16.3	H	3.0	34.7	1.0	-50.0	-13.0	-37.0	

Rev. 03.03.09
Note: No other emissions were detected above the system noise floor.

This report shall not be reproduced except in full, without the written approval of UL CCS.

3.0MHz BAND WIDTH 16QAM (EIRP)

Compliance Certification Services
Above 1GHz High Frequency Substitution Measurement

Company: LG
Project #: 13U14853
Date: 02/19/13
Test Engineer: Mona Hua
Configuration: EUT and AC Adapter
Mode: LTE Band 2, 3MHz 16QAM

Chamber	Pre-amplifer	Filter	Limit
3M Chamber	T34 8449B	Filter 1	Part 24

f GHz	SG reading (dBm)	Ant. Pol. (H/V)	Distance (m)	Preamp (dB)	Filter (dB)	EIRP (dBm)	Limit (dBm)	Delta (dB)	Notes
Low Ch, (1851.5MHz)									
3.701	10.4	V	3.0	35.4	1.0	-24.0	-13.0	-11.0	
5.551	-11.7	V	3.0	34.7	1.0	-45.4	-13.0	-32.4	
3.701	7.8	H	3.0	35.4	1.0	-26.6	-13.0	-13.6	
5.551	-14.5	H	3.0	34.7	1.0	-48.2	-13.0	-35.2	
Mid Ch, (1880MHz)									
3.757	5.4	V	3.0	35.3	1.0	-29.0	-13.0	-16.0	
5.636	-10.8	V	3.0	34.7	1.0	-44.6	-13.0	-31.6	
3.757	4.5	H	3.0	35.3	1.0	-29.9	-13.0	-16.9	
5.636	-14.1	H	3.0	34.7	1.0	-47.8	-13.0	-34.8	
High Ch, (1908.5MHz)									
3.814	3.4	V	3.0	35.3	1.0	-30.9	-13.0	-17.9	
5.722	-16.3	V	3.0	34.7	1.0	-50.1	-13.0	-37.1	
3.814	2.0	H	3.0	35.3	1.0	-32.3	-13.0	-19.3	
5.722	-16.1	H	3.0	34.7	1.0	-49.8	-13.0	-36.8	

Rev. 03.03.09
Note: No other emissions were detected above the system noise floor.

This report shall not be reproduced except in full, without the written approval of UL CCS.

5.0MHz BAND WIDTH QPSK

Compliance Certification Services
Above 1GHz High Frequency Substitution Measurement

Company: LG
Project #: 13U14853
Date: 02/19/13
Test Engineer: Mona Hua
Configuration: EUT and AC Adapter
Mode: LTE Band 2, 5MHz QPSK

Chamber	Pre-amplifer	Filter	Limit
3m Chamber	T34 8449B	Filter 1	Part 24

f GHz	SG reading (dBm)	Ant. Pol. (H/V)	Distance (m)	Preamp (dB)	Filter (dB)	EIRP (dBm)	Limit (dBm)	Delta (dB)	Notes
Low Ch, (1852.5MHz)									
3.701	10.5	V	3.0	35.4	1.0	-23.9	-13.0	-10.9	
5.551	-11.4	V	3.0	34.7	1.0	-45.1	-13.0	-32.1	
3.701	3.4	H	3.0	35.4	1.0	-31.0	-13.0	-18.0	
5.551	-15.8	H	3.0	34.7	1.0	-49.5	-13.0	-36.5	
Mid Ch, (1880MHz)									
3.755	6.3	V	3.0	35.3	1.0	-28.1	-13.0	-15.1	
5.634	-11.5	V	3.0	34.7	1.0	-45.3	-13.0	-32.3	
3.755	0.0	H	3.0	35.3	1.0	-34.4	-13.0	-21.4	
5.634	-14.1	H	3.0	34.7	1.0	-47.8	-13.0	-34.8	
High Ch, (1907.5MHz)									
3.811	3.2	V	3.0	35.3	1.0	-31.1	-13.0	-18.1	
5.716	-15.4	V	3.0	34.7	1.0	-49.1	-13.0	-36.1	
3.811	-0.7	H	3.0	35.3	1.0	-35.0	-13.0	-22.0	
5.716	-15.5	H	3.0	34.7	1.0	-49.2	-13.0	-36.2	

Rev. 03.03.09
Note: No other emissions were detected above the system noise floor.

This report shall not be reproduced except in full, without the written approval of UL CCS.

5.0MHz BAND WIDTH 16QAM (EIRP)

Compliance Certification Services
Above 1GHz High Frequency Substitution Measurement

Company: LG
Project #: 13U14853
Date: 02/19/13
Test Engineer: Mona Hua
Configuration: EUT and AC Adapter
Mode: LTE Band 2, 5MHz 16QAM

Chamber	Pre-amplifer	Filter	Limit
3m Chamber	T34 8449B	Filter 1	Part 24

f GHz	SG reading (dBm)	Ant. Pol. (H/V)	Distance (m)	Preamp (dB)	Filter (dB)	EIRP (dBm)	Limit (dBm)	Delta (dB)	Notes
Low Ch, (1852.5MHz)									
3.701	10.0	V	3.0	35.4	1.0	-24.4	-13.0	-11.4	
5.551	-11.0	V	3.0	34.7	1.0	-44.7	-13.0	-31.7	
3.701	3.6	H	3.0	35.4	1.0	-30.8	-13.0	-17.8	
5.551	-14.5	H	3.0	34.7	1.0	-48.3	-13.0	-35.3	
Mid Ch, (1880MHz)									
3.755	6.2	V	3.0	35.3	1.0	-28.1	-13.0	-15.1	
5.634	-11.7	V	3.0	34.7	1.0	-45.5	-13.0	-32.5	
3.755	0.0	H	3.0	35.3	1.0	-34.3	-13.0	-21.3	
5.634	-16.1	H	3.0	34.7	1.0	-49.8	-13.0	-36.8	
High Ch, (1907.5MHz)									
3.811	2.6	V	3.0	35.3	1.0	-31.7	-13.0	-18.7	
5.716	-15.6	V	3.0	34.7	1.0	-49.3	-13.0	-36.3	
3.811	0.1	H	3.0	35.3	1.0	-34.2	-13.0	-21.2	
5.716	-16.5	H	3.0	34.7	1.0	-50.2	-13.0	-37.2	

Rev. 03.03.09
Note: No other emissions were detected above the system noise floor.

This report shall not be reproduced except in full, without the written approval of UL CCS.

10.0MHz BAND WIDTH QPSK

Compliance Certification Services
Above 1GHz High Frequency Substitution Measurement

Company: LG
Project #: 13U14853
Date: 02/19/13
Test Engineer: Mona Hua
Configuration: EUT and AC Adapter
Mode: LTE Band 2, 10.0MHz QPSK

Chamber	Pre-amplifer	Filter	Limit
3m Chamber	T34 8449B	Filter 1	Part 24

f GHz	SG reading (dBm)	Ant. Pol. (H/V)	Distance (m)	Preamp (dB)	Filter (dB)	EIRP (dBm)	Limit (dBm)	Delta (dB)	Notes
Low Ch, (1855.0MHz)									
3.701	9.9	V	3.0	35.4	1.0	-24.5	-13.0	-11.5	
5.552	-11.1	V	3.0	34.7	1.0	-44.9	-13.0	-31.9	
3.701	3.6	H	3.0	35.4	1.0	-30.8	-13.0	-17.8	
5.552	-16.8	H	3.0	34.7	1.0	-50.5	-13.0	-37.5	
Mid Ch, (1880MHz)									
3.751	4.7	V	3.0	35.4	1.0	-29.6	-13.0	-16.6	
5.628	-9.9	V	3.0	34.7	1.0	-43.7	-13.0	-30.7	
3.751	0.3	H	3.0	35.4	1.0	-34.0	-13.0	-21.0	
5.628	-13.6	H	3.0	34.7	1.0	-47.4	-13.0	-34.4	
High Ch, (1905MHz)									
3.810	5.5	V	3.0	35.3	1.0	-28.8	-13.0	-15.8	
5.715	-10.9	V	3.0	34.7	1.0	-44.7	-13.0	-31.7	
3.810	1.2	H	3.0	35.3	1.0	-33.0	-13.0	-20.0	
5.715	-13.0	H	3.0	34.7	1.0	-46.7	-13.0	-33.7	

Rev. 03.03.09
Note: No other emissions were detected above the system noise floor.

This report shall not be reproduced except in full, without the written approval of UL CCS.

10.0MHz BAND WIDTH 16QAM

Compliance Certification Services
Above 1GHz High Frequency Substitution Measurement

Company: LG
Project #: 13U14853
Date: 02/19/13
Test Engineer: Mona Hua
Configuration: EUT and AC Adapter
Mode: LTE Band 2, 10.0MHz 16QAM

Chamber	Pre-amplifer	Filter	Limit
3m Chamber	T34 8449B	Filter 1	Part 24

f GHz	SG reading (dBm)	Ant. Pol. (H/V)	Distance (m)	Preamp (dB)	Filter (dB)	EIRP (dBm)	Limit (dBm)	Delta (dB)	Notes
Low Ch, (1855.0MHz)									
3.701	9.9	V	3.0	35.4	1.0	-24.5	-13.0	-11.5	
5.552	-11.0	V	3.0	34.7	1.0	-44.8	-13.0	-31.8	
3.701	4.4	H	3.0	35.4	1.0	-30.0	-13.0	-17.0	
5.552	-14.9	H	3.0	34.7	1.0	-48.6	-13.0	-35.6	
Mid Ch, (1880MHz)									
3.751	4.4	V	3.0	35.4	1.0	-30.0	-13.0	-17.0	
5.628	-9.8	V	3.0	34.7	1.0	-43.5	-13.0	-30.5	
3.751	1.5	H	3.0	35.4	1.0	-32.9	-13.0	-19.9	
5.628	-14.4	H	3.0	34.7	1.0	-48.2	-13.0	-35.2	
High Ch, (1905MHz)									
3.810	5.1	V	3.0	35.3	1.0	-29.1	-13.0	-16.1	
5.715	-12.1	V	3.0	34.7	1.0	-45.8	-13.0	-32.8	
3.810	2.7	H	3.0	35.3	1.0	-31.6	-13.0	-18.6	
5.715	-12.3	H	3.0	34.7	1.0	-46.0	-13.0	-33.0	

Rev. 03.03.09
Note: No other emissions were detected above the system noise floor.

This report shall not be reproduced except in full, without the written approval of UL CCS.

7.2.3. *LTE Band 4*

1.4MHz BAND WIDTH QPSK (EIRP)

Compliance Certification Services
Above 1GHz High Frequency Substitution Measurement

Company: LG
Project #: 13U14853
Date:01/29/2013 02/19/13
Test Engineer: Mona Hua
Configuration: EUT with AC adapter
Mode: LTE Band 4, 1.4MHz QPSK

Chamber	Pre-amplifer	Filter	Limit
3m Chamber	T34 8449B	Filter 1	Part 27

f GHz	SG reading (dBm)	Ant. Pol. (H/V)	Distance (m)	Preamp (dB)	Filter (dB)	EIRP (dBm)	Limit (dBm)	Delta (dB)	Notes
Low Ch, (1710.7MHz)									
3.421	1.9	V	3.0	35.7	1.0	-32.7	-13.0	-19.7	
5.132	-15.3	V	3.0	34.7	1.0	-49.0	-13.0	-36.0	
3.421	2.1	H	3.0	35.7	1.0	-32.6	-13.0	-19.6	
5.132	-15.6	H	3.0	34.7	1.0	-49.3	-13.0	-36.3	
Mid Ch, (1732.5MHz)									
3.464	2.4	V	3.0	35.6	1.0	-32.3	-13.0	-19.3	
5.196	-12.7	V	3.0	34.7	1.0	-46.4	-13.0	-33.4	
3.464	0.8	H	3.0	35.6	1.0	-33.8	-13.0	-20.8	
5.196	-12.8	H	3.0	34.7	1.0	-46.5	-13.0	-33.5	
High Ch, (1754.3MHz)									
3.508	-0.9	V	3.0	35.6	1.0	-35.5	-13.0	-22.5	
5.263	-12.0	V	3.0	34.7	1.0	-45.7	-13.0	-32.7	
3.508	-2.3	H	3.0	35.6	1.0	-36.9	-13.0	-23.9	
5.263	-10.3	H	3.0	34.7	1.0	-44.0	-13.0	-31.0	

Rev. 03.03.09
Note: No other emissions were detected above the system noise floor.

This report shall not be reproduced except in full, without the written approval of UL CCS.

1.4MHz BAND WIDTH 16QAM (EIRP)

Compliance Certification Services
Above 1GHz High Frequency Substitution Measurement

Company: LG
Project #: 13U14853
Date:01/29/2013 02/19/13
Test Engineer: Mona Hua
Configuration: EUT with AC adapter
Mode: LTE Band 4, 1.4MHz 16QAM

Chamber	Pre-amplifer	Filter	Limit
3m Chamber	T34 8449B	Filter 1	Part 27

f GHz	SG reading (dBm)	Ant. Pol. (H/V)	Distance (m)	Preamp (dB)	Filter (dB)	EIRP (dBm)	Limit (dBm)	Delta (dB)	Notes
Low Ch, (1710.7MHz)									
3.421	1.9	V	3.0	35.7	1.0	-32.8	-13.0	-19.8	
5.132	-14.7	V	3.0	34.7	1.0	-48.4	-13.0	-35.4	
3.421	3.0	H	3.0	35.7	1.0	-31.7	-13.0	-18.7	
5.132	-14.6	H	3.0	34.7	1.0	-48.3	-13.0	-35.3	
Mid Ch, (1732.5MHz)									
3.464	2.7	V	3.0	35.6	1.0	-32.0	-13.0	-19.0	
5.196	-12.4	V	3.0	34.7	1.0	-46.1	-13.0	-33.1	
3.464	1.3	H	3.0	35.6	1.0	-33.3	-13.0	-20.3	
5.196	-13.8	H	3.0	34.7	1.0	-47.5	-13.0	-34.5	
High Ch, (1754.3MHz)									
3.508	-0.1	V	3.0	35.6	1.0	-34.7	-13.0	-21.7	
5.263	-12.9	V	3.0	34.7	1.0	-46.6	-13.0	-33.6	
3.508	-2.2	H	3.0	35.6	1.0	-36.8	-13.0	-23.8	
5.263	-10.8	H	3.0	34.7	1.0	-44.5	-13.0	-31.5	

Rev. 03.03.09
Note: No other emissions were detected above the system noise floor.

This report shall not be reproduced except in full, without the written approval of UL CCS.

3.0MHz BAND WIDTH QPSK (EIRP)

Compliance Certification Services
Above 1GHz High Frequency Substitution Measurement

Company: LG
Project #: 13U14853
Date:01/29/2013 02/19/13
Test Engineer: Mona Hua
Configuration: EUT with AC adapter
Mode: LTE Band 4, 3MHz QPSK

Chamber	Pre-amplifer	Filter	Limit
3m Chamber	T34 8449B	Filter 1	Part 27

f GHz	SG reading (dBm)	Ant. Pol. (H/V)	Distance (m)	Preamp (dB)	Filter (dB)	EIRP (dBm)	Limit (dBm)	Delta (dB)	Notes
Low Ch, (1711.5MHz)									
3.421	2.8	V	3.0	35.7	1.0	-31.9	-13.0	-18.9	
5.131	-14.8	V	3.0	34.7	1.0	-48.5	-13.0	-35.5	
3.421	2.9	H	3.0	35.7	1.0	-31.8	-13.0	-18.8	
5.131	-13.4	H	3.0	34.7	1.0	-47.1	-13.0	-34.1	
Mid Ch, (1732.5MHz)									
3.463	3.9	V	3.0	35.6	1.0	-30.8	-13.0	-17.8	
5.194	-14.9	V	3.0	34.7	1.0	-48.6	-13.0	-35.6	
3.463	3.4	H	3.0	35.6	1.0	-31.2	-13.0	-18.2	
5.194	-11.8	H	3.0	34.7	1.0	-45.5	-13.0	-32.5	
High Ch, (1753.5MHz)									
3.504	-1.3	V	3.0	35.6	1.0	-35.9	-13.0	-22.9	
5.257	-12.3	V	3.0	34.7	1.0	-46.0	-13.0	-33.0	
3.504	-0.6	H	3.0	35.6	1.0	-35.2	-13.0	-22.2	
5.257	-10.1	H	3.0	34.7	1.0	-43.8	-13.0	-30.8	

Rev. 03.03.09
Note: No other emissions were detected above the system noise floor.

This report shall not be reproduced except in full, without the written approval of UL CCS.

3.0MHz BAND WIDTH 16QAM (EIRP)

Compliance Certification Services
Above 1GHz High Frequency Substitution Measurement

Company: LG
Project #: 13U14853
Date:01/29/2013 02/19/13
Test Engineer: Mona Hua
Configuration: EUT with AC adapter
Mode: LTE Band 4, 5MHz 16QAM

Chamber	Pre-amplifer	Filter	Limit
3m Chamber	T34 8449B	Filter 1	Part 27

f GHz	SG reading (dBm)	Ant. Pol. (H/V)	Distance (m)	Preamp (dB)	Filter (dB)	EIRP (dBm)	Limit (dBm)	Delta (dB)	Notes
Low Ch, (1712.5MHz)									
3.421	1.6	V	3.0	35.7	1.0	-33.1	-13.0	-20.1	
5.130	-15.1	V	3.0	34.7	1.0	-48.8	-13.0	-35.8	
3.421	1.8	H	3.0	35.7	1.0	-32.9	-13.0	-19.9	
5.130	-14.0	H	3.0	34.7	1.0	-47.7	-13.0	-34.7	
Mid Ch, (1732.5MHz)									
3.460	3.0	V	3.0	35.6	1.0	-31.6	-13.0	-18.6	
5.191	-16.5	V	3.0	34.7	1.0	-50.2	-13.0	-37.2	
3.460	3.4	H	3.0	35.6	1.0	-31.2	-13.0	-18.2	
5.191	-12.1	H	3.0	34.7	1.0	-45.8	-13.0	-32.8	
High Ch, (1752.5MHz)									
3.501	-0.3	V	3.0	35.6	1.0	-34.9	-13.0	-21.9	
5.251	-14.8	V	3.0	34.7	1.0	-48.5	-13.0	-35.5	
3.501	-1.7	H	3.0	35.6	1.0	-36.3	-13.0	-23.3	
5.251	-12.5	H	3.0	34.7	1.0	-46.2	-13.0	-33.2	

Rev. 03.03.09
Note: No other emissions were detected above the system noise floor.

This report shall not be reproduced except in full, without the written approval of UL CCS.

5.0MHz BAND WIDTH QPSK (EIRP)

Compliance Certification Services
Above 1GHz High Frequency Substitution Measurement

Company: LG
Project #: 13U14853
Date:01/29/2013 02/19/13
Test Engineer: Mona Hua
Configuration: EUT with AC adapter
Mode: LTE Band 4, 5MHz QPSK

Chamber	Pre-amplifer	Filter	Limit
3m Chamber	T34 8449B	Filter 1	Part 27

f GHz	SG reading (dBm)	Ant. Pol. (H/V)	Distance (m)	Preamp (dB)	Filter (dB)	EIRP (dBm)	Limit (dBm)	Delta (dB)	Notes
Low Ch, (1712.5MHz)									
3.421	1.8	V	3.0	35.7	1.0	-32.9	-13.0	-19.9	
5.130	-14.0	V	3.0	34.7	1.0	-47.7	-13.0	-34.7	
3.421	3.0	H	3.0	35.7	1.0	-31.7	-13.0	-18.7	
5.130	-14.3	H	3.0	34.7	1.0	-48.0	-13.0	-35.0	
Mid Ch, (1732.5MHz)									
3.460	3.6	V	3.0	35.6	1.0	-31.1	-13.0	-18.1	
5.191	-15.5	V	3.0	34.7	1.0	-49.2	-13.0	-36.2	
3.460	3.5	H	3.0	35.6	1.0	-31.1	-13.0	-18.1	
5.191	-12.0	H	3.0	34.7	1.0	-45.7	-13.0	-32.7	
High Ch, (1752.5MHz)									
3.501	-0.6	V	3.0	35.6	1.0	-35.2	-13.0	-22.2	
5.251	-13.9	V	3.0	34.7	1.0	-47.6	-13.0	-34.6	
3.501	-1.4	H	3.0	35.6	1.0	-36.0	-13.0	-23.0	
5.251	-12.7	H	3.0	34.7	1.0	-46.4	-13.0	-33.4	

Rev. 03.03.09
Note: No other emissions were detected above the system noise floor.

This report shall not be reproduced except in full, without the written approval of UL CCS.

5.0MHz BAND WIDTH 16QAM (EIRP)

Compliance Certification Services
Above 1GHz High Frequency Substitution Measurement

Company: LG
Project #: 13U14853
Date:01/29/2013 02/19/13
Test Engineer: Mona Hua
Configuration: EUT with AC adapter
Mode: LTE Band 4, 5MHz 16QAM

Chamber	Pre-amplifer	Filter	Limit
3m Chamber	T34 8449B	Filter 1	Part 27

f GHz	SG reading (dBm)	Ant. Pol. (H/V)	Distance (m)	Preamp (dB)	Filter (dB)	EIRP (dBm)	Limit (dBm)	Delta (dB)	Notes
Low Ch, (1712.5MHz)									
3.421	1.6	V	3.0	35.7	1.0	-33.1	-13.0	-20.1	
5.130	-15.1	V	3.0	34.7	1.0	-48.8	-13.0	-35.8	
3.421	1.8	H	3.0	35.7	1.0	-32.9	-13.0	-19.9	
5.130	-14.0	H	3.0	34.7	1.0	-47.7	-13.0	-34.7	
Mid Ch, (1732.5MHz)									
3.460	3.0	V	3.0	35.6	1.0	-31.6	-13.0	-18.6	
5.191	-16.5	V	3.0	34.7	1.0	-50.2	-13.0	-37.2	
3.460	3.4	H	3.0	35.6	1.0	-31.2	-13.0	-18.2	
5.191	-12.1	H	3.0	34.7	1.0	-45.8	-13.0	-32.8	
High Ch, (1752.5MHz)									
3.501	-0.3	V	3.0	35.6	1.0	-34.9	-13.0	-21.9	
5.251	-14.8	V	3.0	34.7	1.0	-48.5	-13.0	-35.5	
3.501	-1.7	H	3.0	35.6	1.0	-36.3	-13.0	-23.3	
5.251	-12.5	H	3.0	34.7	1.0	-46.2	-13.0	-33.2	

Rev. 03.03.09
Note: No other emissions were detected above the system noise floor.

This report shall not be reproduced except in full, without the written approval of UL CCS.

10.0MHz BAND WIDTH QPSK (EIRP)

Compliance Certification Services
Above 1GHz High Frequency Substitution Measurement

Company: LG
Project #: 13U14853
Date:01/29/2013 02/19/13
Test Engineer: Mona Hua
Configuration: EUT with AC adapter
Mode: LTE Band 4, 10MHz QPSK

Chamber	Pre-amplifer	Filter	Limit
3m Chamber	T34 8449B	Filter 1	Part 27

f GHz	SG reading (dBm)	Ant. Pol. (H/V)	Distance (m)	Preamp (dB)	Filter (dB)	EIRP (dBm)	Limit (dBm)	Delta (dB)	Notes
Low Ch, (1715MHz)									
3.421	2.1	V	3.0	35.7	1.0	-32.5	-13.0	-19.5	
5.131	-13.2	V	3.0	34.7	1.0	-46.9	-13.0	-33.9	
3.421	3.0	H	3.0	35.7	1.0	-31.7	-13.0	-18.7	
5.131	-13.4	H	3.0	34.7	1.0	-47.1	-13.0	-34.1	
Mid Ch, (1732.5MHz)									
3.456	3.9	V	3.0	35.6	1.0	-30.7	-13.0	-17.7	
5.184	-13.6	V	3.0	34.7	1.0	-47.3	-13.0	-34.3	
3.456	4.4	H	3.0	35.6	1.0	-30.2	-13.0	-17.2	
5.184	-11.5	H	3.0	34.7	1.0	-45.2	-13.0	-32.2	
High Ch, (1750MHz)									
3.491	-0.2	V	3.0	35.6	1.0	-34.9	-13.0	-21.9	
5.236	-18.2	V	3.0	34.7	1.0	-51.9	-13.0	-38.9	
3.491	-0.9	H	3.0	35.6	1.0	-35.5	-13.0	-22.5	
5.236	-15.4	H	3.0	34.7	1.0	-49.1	-13.0	-36.1	

Rev. 03.03.09
Note: No other emissions were detected above the system noise floor.

This report shall not be reproduced except in full, without the written approval of UL CCS.

10.0MHz BAND WIDTH 16QAM (EIRP)

Compliance Certification Services
Above 1GHz High Frequency Substitution Measurement

Company: LG
Project #: 13U14853
Date:01/29/2013 02/19/13
Test Engineer: Mona Hua
Configuration: EUT with AC adapter
Mode: LTE Band 4, 10MHz 16QAM Harmonic

Chamber	Pre-amplifer	Filter	Limit
3m Chamber	T34 8449B	Filter 1	Part 27

f GHz	SG reading (dBm)	Ant. Pol. (H/V)	Distance (m)	Preamp (dB)	Filter (dB)	EIRP (dBm)	Limit (dBm)	Delta (dB)	Notes
Low Ch, (1715MHz)									
3.421	1.8	V	3.0	35.7	1.0	-32.8	-13.0	-19.8	
5.131	-14.7	V	3.0	34.7	1.0	-48.4	-13.0	-35.4	
3.421	3.2	H	3.0	35.7	1.0	-31.5	-13.0	-18.5	
5.131	-14.2	H	3.0	34.7	1.0	-47.9	-13.0	-34.9	
Mid Ch, (1732.5MHz)									
3.456	3.8	V	3.0	35.6	1.0	-30.8	-13.0	-17.8	
5.184	-13.5	V	3.0	34.7	1.0	-47.2	-13.0	-34.2	
3.456	4.4	H	3.0	35.6	1.0	-30.2	-13.0	-17.2	
5.184	-12.4	H	3.0	34.7	1.0	-46.1	-13.0	-33.1	
High Ch, (1750MHz)									
3.491	0.8	V	3.0	35.6	1.0	-33.9	-13.0	-20.9	
5.236	-18.0	V	3.0	34.7	1.0	-51.7	-13.0	-38.7	
3.491	0.2	H	3.0	35.6	1.0	-34.4	-13.0	-21.4	
5.236	-15.4	H	3.0	34.7	1.0	-49.1	-13.0	-36.1	

Rev. 03.03.09
Note: No other emissions were detected above the system noise floor.

This report shall not be reproduced except in full, without the written approval of UL CCS.

7.2.4. *LTE Band 5*

1.4MHz BAND WIDTH QPSK (ERP)

Compliance Certification Services
Above 1GHz High Frequency Substitution Measurement

Company: LG
Project #: 13U14853
Date:01/29/2013 02/16/13
Test Engineer: Mona Hua
Configuration: EUT with AC adapter
Mode: LTE Band 5, 1.4MHz QPSK

Chamber	Pre-amplifer	Filter	Limit
5m Chamber B	T145 8449B	Filter 1	Part 22

f GHz	SG reading (dBm)	Ant. Pol. (H/V)	Distance (m)	Preamp (dB)	Filter (dB)	ERP (dBm)	Limit (dBm)	Delta (dB)	Notes
Low Ch, (824.7MHz)									
1.648	-15.9	V	3.0	35.5	1.0	-50.4	-13.0	-37.4	
2.474	-13.4	V	3.0	35.4	1.0	-47.8	-13.0	-34.8	
1.649	-14.7	H	3.0	35.5	1.0	-49.2	-13.0	-36.2	
2.474	-15.1	H	3.0	35.4	1.0	-49.5	-13.0	-36.5	
Mid Ch, (836.5MHz)									
1.673	-18.7	V	3.0	35.5	1.0	-53.2	-13.0	-40.2	
2.509	-9.3	V	3.0	35.4	1.0	-43.7	-13.0	-30.7	
1.672	-16.5	H	3.0	35.5	1.0	-51.1	-13.0	-38.1	
2.508	-12.7	H	3.0	35.4	1.0	-47.1	-13.0	-34.1	
High Ch, (848.3MHz)									
1.697	-17.0	V	3.0	35.5	1.0	-51.5	-13.0	-38.5	
2.545	-14.1	V	3.0	35.4	1.0	-48.6	-13.0	-35.6	
1.696	-16.5	H	3.0	35.5	1.0	-51.0	-13.0	-38.0	
2.543	-11.2	H	3.0	35.4	1.0	-45.6	-13.0	-32.6	

Rev. 03.03.09
Note: No other emissions were detected above the system noise floor.

This report shall not be reproduced except in full, without the written approval of UL CCS.

1.4MHz BAND WIDTH 16QAM (ERP)

Compliance Certification Services
Above 1GHz High Frequency Substitution Measurement

Company: LG
Project #: 13U14853
Date:01/29/2013 02/16/13
Test Engineer: Mona Hua
Configuration: EUT with AC adapter
Mode: LTE Band 5, 1.4MHz 16QAM

Chamber	Pre-amplifer	Filter	Limit
5m Chamber B	T145 8449B	Filter 1	Part 22

f GHz	SG reading (dBm)	Ant. Pol. (H/V)	Distance (m)	Preamp (dB)	Filter (dB)	ERP (dBm)	Limit (dBm)	Delta (dB)	Notes
Low Ch, (824.7MHz)									
1.648	-14.7	V	3.0	35.5	1.0	-49.2	-13.0	-36.2	
2.474	-13.1	V	3.0	35.4	1.0	-47.5	-13.0	-34.5	
1.649	-14.3	H	3.0	35.5	1.0	-48.8	-13.0	-35.8	
2.472	-15.4	H	3.0	35.4	1.0	-49.8	-13.0	-36.8	
Mid Ch, (836.5MHz)									
1.673	-18.7	V	3.0	35.5	1.0	-53.2	-13.0	-40.2	
2.510	-9.4	V	3.0	35.4	1.0	-43.8	-13.0	-30.8	
1.672	-15.7	H	3.0	35.5	1.0	-50.2	-13.0	-37.2	
2.508	-12.2	H	3.0	35.4	1.0	-46.6	-13.0	-33.6	
High Ch, (848.3MHz)									
1.697	-16.8	V	3.0	35.5	1.0	-51.3	-13.0	-38.3	
2.545	-13.7	V	3.0	35.4	1.0	-48.2	-13.0	-35.2	
1.696	-15.9	H	3.0	35.5	1.0	-50.4	-13.0	-37.4	
2.544	-11.1	H	3.0	35.4	1.0	-45.5	-13.0	-32.5	

Rev. 03.03.09
Note: No other emissions were detected above the system noise floor.

This report shall not be reproduced except in full, without the written approval of UL CCS.

3.0MHz BAND WIDTH QPSK (ERP)

Compliance Certification Services
Above 1GHz High Frequency Substitution Measurement

Company: LG
Project #: 13U14853
Date:01/29/2013 02/16/13
Test Engineer: Mona Hua
Configuration: EUT with AC adapter
Mode: LTE Band 5, 3MHz QPSK

Chamber	Pre-amplifer	Filter	Limit
5m Chamber B	T145 8449B	Filter 1	Part 22

f GHz	SG reading (dBm)	Ant. Pol. (H/V)	Distance (m)	Preamp (dB)	Filter (dB)	ERP (dBm)	Limit (dBm)	Delta (dB)	Notes
Low Ch, (825.5MHz)									
1.648	-13.0	V	3.0	35.5	1.0	-47.6	-13.0	-34.6	
2.473	-11.3	V	3.0	35.4	1.0	-45.7	-13.0	-32.7	
1.648	-17.8	H	3.0	35.5	1.0	-52.4	-13.0	-39.4	
2.473	-11.8	H	3.0	35.4	1.0	-46.2	-13.0	-33.2	
Mid Ch, (836.5MHz)									
1.670	-18.8	V	3.0	35.5	1.0	-53.3	-13.0	-40.3	
2.506	-10.5	V	3.0	35.4	1.0	-44.9	-13.0	-31.9	
1.671	-16.2	H	3.0	35.5	1.0	-50.7	-13.0	-37.7	
2.505	-11.5	H	3.0	35.4	1.0	-45.9	-13.0	-32.9	
High Ch, (847.5MHz)									
1.692	-16.1	V	3.0	35.5	1.0	-50.7	-13.0	-37.7	
2.539	-9.1	V	3.0	35.4	1.0	-43.5	-13.0	-30.5	
1.693	-15.3	H	3.0	35.5	1.0	-49.8	-13.0	-36.8	
2.538	-9.1	H	3.0	35.4	1.0	-43.6	-13.0	-30.6	

Rev. 03.03.09
Note: No other emissions were detected above the system noise floor.

This report shall not be reproduced except in full, without the written approval of UL CCS.

3.0MHz BAND WIDTH 16QAM (ERP)

Compliance Certification Services
Above 1GHz High Frequency Substitution Measurement

Company: LG
Project #: 13U14853
Date:01/29/2013 02/16/13
Test Engineer: Mona Hua
Configuration: EUT with AC adapter
Mode: LTE Band 5, 3MHz 16QAM

Chamber	Pre-amplifer	Filter	Limit
5m Chamber B	T145 8449B	Filter 1	Part 22

f GHz	SG reading (dBm)	Ant. Pol. (H/V)	Distance (m)	Preamp (dB)	Filter (dB)	ERP (dBm)	Limit (dBm)	Delta (dB)	Notes
Low Ch, (825.5MHz)									
1.648	-15.1	V	3.0	35.5	1.0	-49.7	-13.0	-36.7	
2.473	-13.1	V	3.0	35.4	1.0	-47.5	-13.0	-34.5	
1.649	-16.8	H	3.0	35.5	1.0	-51.3	-13.0	-38.3	
2.473	-13.5	H	3.0	35.4	1.0	-47.9	-13.0	-34.9	
Mid Ch, (836.5MHz)									
1.671	-16.8	V	3.0	35.5	1.0	-51.3	-13.0	-38.3	
2.506	-10.9	V	3.0	35.4	1.0	-45.3	-13.0	-32.3	
1.671	-15.8	H	3.0	35.5	1.0	-50.4	-13.0	-37.4	
2.506	-12.8	H	3.0	35.4	1.0	-47.2	-13.0	-34.2	
High Ch, (847.5MHz)									
1.692	-16.4	V	3.0	35.5	1.0	-50.9	-13.0	-37.9	
2.538	-10.4	V	3.0	35.4	1.0	-44.8	-13.0	-31.8	
1.692	-14.8	H	3.0	35.5	1.0	-49.3	-13.0	-36.3	
2.538	-10.0	H	3.0	35.4	1.0	-44.5	-13.0	-31.5	

Rev. 03.03.09
Note: No other emissions were detected above the system noise floor.

This report shall not be reproduced except in full, without the written approval of UL CCS.

5.0MHz BAND WIDTH QPSK (ERP)

Compliance Certification Services
Above 1GHz High Frequency Substitution Measurement

Company: LG
Project #: 13U14853
Date:01/29/2013 02/16/13
Test Engineer: Mona Hua
Configuration: EUT with AC adapter
Mode: LTE Band 5, 5MHz QPSK

Chamber	Pre-amplifer	Filter	Limit
5m Chamber B	T145 8449B	Filter 1	Part 22

f GHz	SG reading (dBm)	Ant. Pol. (H/V)	Distance (m)	Preamp (dB)	Filter (dB)	ERP (dBm)	Limit (dBm)	Delta (dB)	Notes
Low Ch, (826.5MHz)									
1.649	-14.5	V	3.0	35.5	1.0	-49.0	-13.0	-36.0	
2.473	-14.6	V	3.0	35.4	1.0	-49.0	-13.0	-36.0	
1.649	-13.0	H	3.0	35.5	1.0	-47.6	-13.0	-34.6	
2.473	-14.8	H	3.0	35.4	1.0	-49.2	-13.0	-36.2	
Mid Ch, (836.5MHz)									
1.669	-16.3	V	3.0	35.5	1.0	-50.8	-13.0	-37.8	
2.504	-9.0	V	3.0	35.4	1.0	-43.4	-13.0	-30.4	
1.673	-15.3	H	3.0	35.5	1.0	-49.8	-13.0	-36.8	
2.510	-9.3	H	3.0	35.4	1.0	-43.7	-13.0	-30.7	
High Ch, (846.5MHz)									
1.689	-16.1	V	3.0	35.5	1.0	-50.6	-13.0	-37.6	
2.533	-11.3	V	3.0	35.4	1.0	-45.7	-13.0	-32.7	
1.693	-12.8	H	3.0	35.5	1.0	-47.3	-13.0	-34.3	
2.540	-10.7	H	3.0	35.4	1.0	-45.2	-13.0	-32.2	

Rev. 03.03.09
Note: No other emissions were detected above the system noise floor.

This report shall not be reproduced except in full, without the written approval of UL CCS.

5.0MHz BAND WIDTH 16QAM (ERP)

Compliance Certification Services
Above 1GHz High Frequency Substitution Measurement

Company:	LG
Project #:	13U14853
Date:01/29/2013	02/16/13
Test Engineer:	Mona Hua
Configuration:	EUT with AC adapter
Mode:	LTE Band 5, 5MHz 16QAM

Chamber	Pre-amplifer	Filter	Limit
5m Chamber B	T145 8449B	Filter 1	Part 22

f GHz	SG reading (dBm)	Ant. Pol. (H/V)	Distance (m)	Preamp (dB)	Filter (dB)	ERP (dBm)	Limit (dBm)	Delta (dB)	Notes
Low Ch, (826.5MHz)									
1.649	-14.1	V	3.0	35.5	1.0	-48.6	-13.0	-35.6	
2.473	-13.0	V	3.0	35.4	1.0	-47.4	-13.0	-34.4	
1.650	-12.2	H	3.0	35.5	1.0	-46.8	-13.0	-33.8	
2.473	-14.9	H	3.0	35.4	1.0	-49.3	-13.0	-36.3	
Mid Ch, (836.5MHz)									
1.669	-18.5	V	3.0	35.5	1.0	-53.1	-13.0	-40.1	
2.503	-8.1	V	3.0	35.4	1.0	-42.5	-13.0	-29.5	
1.673	-14.1	H	3.0	35.5	1.0	-48.7	-13.0	-35.7	
2.510	-9.2	H	3.0	35.4	1.0	-43.6	-13.0	-30.6	
High Ch, (846.5MHz)									
1.689	-16.9	V	3.0	35.5	1.0	-51.4	-13.0	-38.4	
2.533	-10.4	V	3.0	35.4	1.0	-44.8	-13.0	-31.8	
1.693	-13.6	H	3.0	35.5	1.0	-48.1	-13.0	-35.1	
2.540	-10.7	H	3.0	35.4	1.0	-45.2	-13.0	-32.2	

Rev. 03.03.09
Note: No other emissions were detected above the system noise floor.

This report shall not be reproduced except in full, without the written approval of UL CCS.

10.0MHz BAND WIDTH QPSK (ERP)

Compliance Certification Services
Above 1GHz High Frequency Substitution Measurement

Company: LG
Project #: 13U14853
Date: 02/16/13
Test Engineer: Mona Hua
Configuration: EUT with AC adapter
Mode: LTE Band 5, 10MHz QPSK

Chamber	Pre-amplifer	Filter	Limit
5m Chamber B	T145 8449B	Filter 1	Part 22

f GHz	SG reading (dBm)	Ant. Pol. (H/V)	Distance (m)	Preamp (dB)	Filter (dB)	ERP (dBm)	Limit (dBm)	Delta (dB)	Notes
Low Ch, (829.0MHz)									
1.658	-19.3	V	3.0	35.5	1.0	-53.8	-13.0	-40.8	
2.487	-6.7	V	3.0	35.4	1.0	-41.1	-13.0	-28.1	
1.658	-13.2	H	3.0	35.5	1.0	-47.7	-13.0	-34.7	
2.487	-12.6	H	3.0	35.4	1.0	-47.0	-13.0	-34.0	
Mid Ch, (836.5MHz)									
1.673	-17.0	V	3.0	35.5	1.0	-51.5	-13.0	-38.5	
2.510	-5.9	V	3.0	35.4	1.0	-40.3	-13.0	-27.3	
1.673	-19.6	H	3.0	35.5	1.0	-54.2	-13.0	-41.2	
2.510	-9.9	H	3.0	35.4	1.0	-44.3	-13.0	-31.3	
High Ch, (844.0MHz)									
1.688	-15.2	V	3.0	35.5	1.0	-49.7	-13.0	-36.7	
2.532	-17.0	V	3.0	35.4	1.0	-51.4	-13.0	-38.4	
1.688	-16.6	H	3.0	35.5	1.0	-51.1	-13.0	-38.1	
2.532	-7.7	H	3.0	35.4	1.0	-42.1	-13.0	-29.1	

Rev. 03.03.09
Note: No other emissions were detected above the system noise floor.

This report shall not be reproduced except in full, without the written approval of UL CCS.

10.0MHz BAND WIDTH 16QAM (ERP)

Compliance Certification Services
Above 1GHz High Frequency Substitution Measurement

Company: LG
Project #: 13U14853
Date: 02/16/13
Test Engineer: Mona Hua
Configuration: EUT with AC adapter
Mode: LTE Band 5, 10MHz 16QAM

Chamber	Pre-amplifer	Filter	Limit
5m Chamber B	T145 8449B	Filter 1	Part 22

f GHz	SG reading (dBm)	Ant. Pol. (H/V)	Distance (m)	Preamp (dB)	Filter (dB)	ERP (dBm)	Limit (dBm)	Delta (dB)	Notes
Low Ch, (829.0MHz)									
1.658	-18.3	V	3.0	35.5	1.0	-52.8	-13.0	-39.8	
2.487	-6.6	V	3.0	35.4	1.0	-41.0	-13.0	-28.0	
1.658	-14.8	H	3.0	35.5	1.0	-49.3	-13.0	-36.3	
2.487	-9.3	H	3.0	35.4	1.0	-43.7	-13.0	-30.7	
Mid Ch, (836.5MHz)									
1.673	-16.9	V	3.0	35.5	1.0	-51.4	-13.0	-38.4	
2.510	-7.2	V	3.0	35.4	1.0	-41.6	-13.0	-28.6	
1.673	-17.2	H	3.0	35.5	1.0	-51.8	-13.0	-38.8	
2.510	-9.7	H	3.0	35.4	1.0	-44.1	-13.0	-31.1	
High Ch, (844.0MHz)									
1.688	-13.4	V	3.0	35.5	1.0	-47.9	-13.0	-34.9	
2.532	-15.0	V	3.0	35.4	1.0	-49.4	-13.0	-36.4	
1.688	-17.8	H	3.0	35.5	1.0	-52.3	-13.0	-39.3	
2.532	-8.1	H	3.0	35.4	1.0	-42.5	-13.0	-29.5	

Rev. 03.03.09
Note: No other emissions were detected above the system noise floor.

This report shall not be reproduced except in full, without the written approval of UL CCS.

7.2.5. *LTE Band 12*

1.4MHz BAND WIDTH QPSK (ERP)

Compliance Certification Services
Above 1GHz High Frequency Substitution Measurement

Company: LG
Project #: 13U14853
Date:01/29/2013 02/19/13
Test Engineer: Lieu Nguyen
Configuration: EUT with AC adapter
Mode: LTE Band 12, 1.4MHz QPSK

Chamber	Pre-amplifer	Filter	Limit
5m Chamber B	T145 8449B	Filter 1	Part 27

f GHz	SG reading (dBm)	Ant. Pol. (H/V)	Distance (m)	Preamp (dB)	Filter (dB)	ERP (dBm)	Limit (dBm)	Delta (dB)	Notes
Low Ch, (699.7MHz)									
1.398	1.3	V	3.0	35.8	1.0	-33.5	-13.0	-20.5	
2.097	-8.8	V	3.0	35.4	1.0	-43.1	-13.0	-30.1	
1.400	-15.8	H	3.0	35.8	1.0	-50.5	-13.0	-37.5	
2.000	-8.2	H	3.0	35.3	1.0	-42.5	-13.0	-29.5	
Mid Ch, (707.5MHz)									
1.414	2.7	V	3.0	35.8	1.0	-32.1	-13.0	-19.1	
2.121	-6.7	V	3.0	35.4	1.0	-41.1	-13.0	-28.1	
1.414	-14.4	H	3.0	35.8	1.0	-49.1	-13.0	-36.1	
2.121	-8.5	H	3.0	35.4	1.0	-42.8	-13.0	-29.8	
High Ch, (715.3MHz)									
1.429	2.8	V	3.0	35.7	1.0	-31.9	-13.0	-18.9	
2.144	-9.0	V	3.0	35.4	1.0	-43.3	-13.0	-30.3	
1.424	-10.6	H	3.0	35.7	1.0	-45.4	-13.0	-32.4	
2.142	-5.3	H	3.0	35.4	1.0	-39.6	-13.0	-26.6	

Rev. 03.03.09
Note: No other emissions were detected above the system noise floor.

This report shall not be reproduced except in full, without the written approval of UL CCS.

1.4MHz BAND WIDTH 16QAM (ERP)

Compliance Certification Services
Above 1GHz High Frequency Substitution Measurement

Company: LG
Project #: 13U14853
Date:01/29/2013 02/19/13
Test Engineer: Lieu Nguyen
Configuration: EUT with AC adapter
Mode: LTE Band 12, 1.4MHz 16QAM Harmonic

Chamber	Pre-amplifer	Filter	Limit
5m Chamber B	T145 8449B	Filter 1	Part 27

f GHz	SG reading (dBm)	Ant. Pol. (H/V)	Distance (m)	Preamp (dB)	Filter (dB)	ERP (dBm)	Limit (dBm)	Delta (dB)	Notes
Low Ch, (699.7MHz)									
1.398	-2.6	V	3.0	35.8	1.0	-37.4	-13.0	-24.4	
2.097	-14.5	V	3.0	35.4	1.0	-48.9	-13.0	-35.9	
1.400	-14.2	H	3.0	35.8	1.0	-48.9	-13.0	-35.9	
2.100	-8.7	H	3.0	35.4	1.0	-43.1	-13.0	-30.1	
Mid Ch, (707.5MHz)									
1.414	2.1	V	3.0	35.8	1.0	-32.6	-13.0	-19.6	
2.121	-8.6	V	3.0	35.4	1.0	-43.0	-13.0	-30.0	
1.414	-14.5	H	3.0	35.8	1.0	-49.2	-13.0	-36.2	
2.121	-8.3	H	3.0	35.4	1.0	-42.7	-13.0	-29.7	
High Ch, (715.3MHz)									
1.429	3.3	V	3.0	35.7	1.0	-31.4	-13.0	-18.4	
2.144	-8.7	V	3.0	35.4	1.0	-43.1	-13.0	-30.1	
1.428	-11.5	H	3.0	35.7	1.0	-46.3	-13.0	-33.3	
2.142	-4.9	H	3.0	35.4	1.0	-39.3	-13.0	-26.3	

Rev. 03.03.09
Note: No other emissions were detected above the system noise floor.

This report shall not be reproduced except in full, without the written approval of UL CCS.

3.0MHz BAND WIDTH QPSK (ERP)

Compliance Certification Services
Above 1GHz High Frequency Substitution Measurement

Company: LG
Project #: 13U14853
Date:01/29/2013 02/18/13
Test Engineer: Lieu Nguyen
Configuration: EUT with AC adapter
Mode: LTE Band 12, 3MHz QPSK

Chamber	Pre-amplifer	Filter	Limit
5m Chamber B	T145 8449B	Filter 1	Part 27

f GHz	SG reading (dBm)	Ant. Pol. (H/V)	Distance (m)	Preamp (dB)	Filter (dB)	ERP (dBm)	Limit (dBm)	Delta (dB)	Notes
Low Ch, (700.5MHz)									
1.398	-18.6	V	3.0	35.8	1.0	-53.4	-13.0	-40.4	
2.098	-22.3	V	3.0	35.4	1.0	-56.6	-13.0	-43.6	
1.398	-16.9	H	3.0	35.8	1.0	-51.7	-13.0	-38.7	
2.097	-9.7	H	3.0	35.4	1.0	-44.1	-13.0	-31.1	
Mid Ch, (707.5MHz)									
1.413	-17.5	V	3.0	35.8	1.0	-52.3	-13.0	-39.3	
2.118	-12.9	V	3.0	35.4	1.0	-47.3	-13.0	-34.3	
1.412	-15.4	H	3.0	35.8	1.0	-50.1	-13.0	-37.1	
2.118	-7.1	H	3.0	35.4	1.0	-41.5	-13.0	-28.5	
High Ch, (714.5MHz)									
1.426	-15.6	V	3.0	35.7	1.0	-50.3	-13.0	-37.3	
2.139	-11.1	V	3.0	35.4	1.0	-45.5	-13.0	-32.5	
1.426	-12.5	H	3.0	35.7	1.0	-47.2	-13.0	-34.2	
2.139	-5.1	H	3.0	35.4	1.0	-39.5	-13.0	-26.5	

Rev. 03.03.09
Note: No other emissions were detected above the system noise floor.

This report shall not be reproduced except in full, without the written approval of UL CCS.

3.0MHz BAND WIDTH 16QAM (ERP)

Compliance Certification Services
Above 1GHz High Frequency Substitution Measurement

Company: LG
Project #: 13U14853
Date:01/29/2013 02/18/13
Test Engineer: Lieu Nguyen
Configuration: EUT with AC adapter
Mode: LTE Band 12, 3MHz 16QAM

Chamber	Pre-amplifer	Filter	Limit
5m Chamber B	T145 8449B	Filter 1	Part 27

f GHz	SG reading (dBm)	Ant. Pol. (H/V)	Distance (m)	Preamp (dB)	Filter (dB)	ERP (dBm)	Limit (dBm)	Delta (dB)	Notes
Low Ch, (700.5MHz)									
1.398	-18.4	V	3.0	35.8	1.0	-53.2	-13.0	-40.2	
2.097	-21.8	V	3.0	35.4	1.0	-56.2	-13.0	-43.2	
1.398	-17.0	H	3.0	35.8	1.0	-51.8	-13.0	-38.8	
2.097	-10.3	H	3.0	35.4	1.0	-44.7	-13.0	-31.7	
Mid Ch, (707.5MHz)									
1.413	-18.9	V	3.0	35.8	1.0	-53.7	-13.0	-40.7	
2.118	-11.2	V	3.0	35.4	1.0	-45.5	-13.0	-32.5	
1.412	-17.0	H	3.0	35.8	1.0	-51.7	-13.0	-38.7	
2.118	-9.6	H	3.0	35.4	1.0	-44.0	-13.0	-31.0	
High Ch, (714.5MHz)									
1.426	-14.8	V	3.0	35.7	1.0	-49.6	-13.0	-36.6	
2.139	-12.8	V	3.0	35.4	1.0	-47.1	-13.0	-34.1	
1.426	-12.0	H	3.0	35.7	1.0	-46.8	-13.0	-33.8	
2.139	-4.6	H	3.0	35.4	1.0	-39.0	-13.0	-26.0	

Rev. 03.03.09
Note: No other emissions were detected above the system noise floor.

This report shall not be reproduced except in full, without the written approval of UL CCS.

5.0MHz BAND WIDTH QPSK (ERP)

Compliance Certification Services
Above 1GHz High Frequency Substitution Measurement

Company: LG
Project #: 13U14853
Date:01/29/2013 02/18/13
Test Engineer: Mona Hua
Configuration: EUT with AC adapter
Mode: LTE Band 12, 5MHz QPSK

Chamber	Pre-amplifer	Filter	Limit
5m Chamber B	T145 8449B	Filter 1	Part 27

f GHz	SG reading (dBm)	Ant. Pol. (H/V)	Distance (m)	Preamp (dB)	Filter (dB)	ERP (dBm)	Limit (dBm)	Delta (dB)	Notes
Low Ch, (701.5MHz)									
1.398	-18.8	V	3.0	35.8	1.0	-53.6	-13.0	-40.6	
2.098	-16.7	V	3.0	35.4	1.0	-51.1	-13.0	-38.1	
1.399	-17.2	H	3.0	35.8	1.0	-52.0	-13.0	-39.0	
2.098	-12.2	H	3.0	35.4	1.0	-46.6	-13.0	-33.6	
Mid Ch, (707.5MHz)									
1.411	-13.2	V	3.0	35.8	1.0	-48.0	-13.0	-35.0	
2.116	-13.3	V	3.0	35.4	1.0	-47.7	-13.0	-34.7	
1.410	-11.1	H	3.0	35.8	1.0	-45.8	-13.0	-32.8	
2.116	-7.2	H	3.0	35.4	1.0	-41.5	-13.0	-28.5	
High Ch, (713.5MHz)									
1.423	-14.5	V	3.0	35.7	1.0	-49.3	-13.0	-36.3	
2.134	-9.9	V	3.0	35.4	1.0	-44.3	-13.0	-31.3	
1.423	-12.0	H	3.0	35.7	1.0	-46.7	-13.0	-33.7	
2.134	-2.6	H	3.0	35.4	1.0	-37.0	-13.0	-24.0	

Rev. 03.03.09
Note: No other emissions were detected above the system noise floor.

This report shall not be reproduced except in full, without the written approval of UL CCS.

5.0MHz BAND WIDTH 16QAM (ERP)

Compliance Certification Services
Above 1GHz High Frequency Substitution Measurement

Company: LG
Project #: 13U14853
Date:01/29/2013 02/18/13
Test Engineer: Mona Hua
Configuration: EUT with AC adapter
Mode: LTE Band 12, 5MHz 16QAM

Chamber	Pre-amplifer	Filter	Limit
5m Chamber B	T145 8449B	Filter 1	Part 27

f GHz	SG reading (dBm)	Ant. Pol. (H/V)	Distance (m)	Preamp (dB)	Filter (dB)	ERP (dBm)	Limit (dBm)	Delta (dB)	Notes
Low Ch, (701.5MHz)									
1.398	-19.3	V	3.0	35.8	1.0	-54.1	-13.0	-41.1	
2.098	-14.6	V	3.0	35.4	1.0	-49.0	-13.0	-36.0	
1.399	-17.3	H	3.0	35.8	1.0	-52.1	-13.0	-39.1	
2.098	-12.4	H	3.0	35.4	1.0	-46.8	-13.0	-33.8	
Mid Ch, (707.5MHz)									
1.411	-14.8	V	3.0	35.8	1.0	-49.6	-13.0	-36.6	
2.116	-12.5	V	3.0	35.4	1.0	-46.9	-13.0	-33.9	
1.410	-13.6	H	3.0	35.8	1.0	-48.3	-13.0	-35.3	
2.116	-7.1	H	3.0	35.4	1.0	-41.5	-13.0	-28.5	
High Ch, (713.5MHz)									
1.423	-14.8	V	3.0	35.7	1.0	-49.6	-13.0	-36.6	
2.134	-10.0	V	3.0	35.4	1.0	-44.4	-13.0	-31.4	
1.423	-11.7	H	3.0	35.7	1.0	-46.5	-13.0	-33.5	
2.134	-3.3	H	3.0	35.4	1.0	-37.6	-13.0	-24.6	

Rev. 03.03.09
Note: No other emissions were detected above the system noise floor.

This report shall not be reproduced except in full, without the written approval of UL CCS.

10.0MHz BAND WIDTH QPSK (ERP)

Compliance Certification Services
Above 1GHz High Frequency Substitution Measurement

Company: LG
Project #: 13U14853
Date:01/29/2013 02/18/13
Test Engineer: Mona Hua
Configuration: EUT with AC adapter
Mode: LTE Band 12, 10MHz QPSK

Chamber	Pre-amplifer	Filter	Limit
5m Chamber B	T145 8449B	Filter 1	Part 27

f GHz	SG reading (dBm)	Ant. Pol. (H/V)	Distance (m)	Preamp (dB)	Filter (dB)	ERP (dBm)	Limit (dBm)	Delta (dB)	Notes
Low Ch, (704.0MHz)									
1.399	-12.2	V	3.0	35.8	1.0	-47.0	-13.0	-34.0	
2.099	-7.1	V	3.0	35.4	1.0	-41.5	-13.0	-28.5	
1.399	-9.0	H	3.0	35.8	1.0	-43.7	-13.0	-30.7	
2.099	-9.1	H	3.0	35.4	1.0	-43.5	-13.0	-30.5	
Mid Ch, (707.5MHz)									
1.406	-13.1	V	3.0	35.8	1.0	-47.8	-13.0	-34.8	
2.109	-9.7	V	3.0	35.4	1.0	-44.1	-13.0	-31.1	
1.406	-12.1	H	3.0	35.8	1.0	-46.9	-13.0	-33.9	
2.109	-5.2	H	3.0	35.4	1.0	-39.6	-13.0	-26.6	
High Ch, (711.0MHz)									
1.413	-11.3	V	3.0	35.8	1.0	-46.1	-13.0	-33.1	
2.120	-8.0	V	3.0	35.4	1.0	-42.4	-13.0	-29.4	
1.413	-13.7	H	3.0	35.8	1.0	-48.4	-13.0	-35.4	
2.120	-6.7	H	3.0	35.4	1.0	-41.1	-13.0	-28.1	

Rev. 03.03.09
Note: No other emissions were detected above the system noise floor.

This report shall not be reproduced except in full, without the written approval of UL CCS.

10.0MHz BAND WIDTH 16QAM (ERP)

Compliance Certification Services
Above 1GHz High Frequency Substitution Measurement

LG
13U14853
/2013 02/18/13
neer: Mona Hua
tion: EUT with AC adapter
LTE Band 12, 10MHz 16QAM

Chamber	Pre-amplifer	Filter	Limit
Chamber B	T145 8449B	Filter 1	Part 27

SG reading (dBm)	Ant. Pol. (H/V)	Distance (m)	Preamp (dB)	Filter (dB)	ERP (dBm)	Limit (dBm)	Delta (dB)	Notes
4.0MHz)								
-13.5	V	3.0	35.8	1.0	-48.3	-13.0	-35.3	
-8.3	V	3.0	35.4	1.0	-42.7	-13.0	-29.7	
-10.1	H	3.0	35.8	1.0	-44.8	-13.0	-31.8	
-9.7	H	3.0	35.4	1.0	-44.1	-13.0	-31.1	
7.5MHz)								
-14.0	V	3.0	35.8	1.0	-48.7	-13.0	-35.7	
-11.1	V	3.0	35.4	1.0	-45.5	-13.0	-32.5	
-13.0	H	3.0	35.8	1.0	-47.8	-13.0	-34.8	
-6.3	H	3.0	35.4	1.0	-40.7	-13.0	-27.7	
1.0MHz)								
-13.4	V	3.0	35.8	1.0	-48.2	-13.0	-35.2	
-9.6	V	3.0	35.4	1.0	-44.0	-13.0	-31.0	
-14.5	H	3.0	35.8	1.0	-49.3	-13.0	-36.3	
-6.9	H	3.0	35.4	1.0	-41.3	-13.0	-28.3	

9
er emissions were detected above the system noise floor.

This report shall not be reproduced except in full, without the written approval of UL CCS.

7.2.6. *LTE Band 25*

1.4MHz BAND WIDTH QPSK (EIRP)

Compliance Certification Services
Above 1GHz High Frequency Substitution Measurement

Company: LG
Project #: 13U14853
Date: 02/21/13
Test Engineer: Lieu Nguyen
Configuration: EUT and AC Adapter
Mode: LTE Band 25, 1.4MHz QPSK

Chamber	Pre-amplifer	Filter	Limit
3m Chamber	T34 8449B	Filter 1	Part 24

f GHz	SG reading (dBm)	Ant. Pol. (H/V)	Distance (m)	Preamp (dB)	Filter (dB)	EIRP (dBm)	Limit (dBm)	Delta (dB)	Notes
Low Ch, (1850.7MHz)									
3.701	3.3	V	3.0	35.4	1.0	-31.1	-13.0	-18.1	
5.560	-10.0	V	3.0	34.7	1.0	-43.7	-13.0	-30.7	
3.701	2.4	H	3.0	35.4	1.0	-32.0	-13.0	-19.0	
5.560	-10.2	H	3.0	34.7	1.0	-43.9	-13.0	-30.9	
Mid Ch, (1882.5MHz)									
3.763	-0.3	V	3.0	35.3	1.0	-34.6	-13.0	-21.6	
5.646	-20.1	V	3.0	34.7	1.0	-53.8	-13.0	-40.8	
3.763	-2.3	H	3.0	35.3	1.0	-36.6	-13.0	-23.6	
5.646	-11.6	H	3.0	34.7	1.0	-45.3	-13.0	-32.3	
High Ch, (1914.3MHz)									
3.828	-2.4	V	3.0	35.3	1.0	-36.6	-13.0	-23.6	
5.742	-10.7	V	3.0	34.7	1.0	-44.5	-13.0	-31.5	
3.827	-0.9	H	3.0	35.3	1.0	-35.1	-13.0	-22.1	
5.742	-11.4	H	3.0	34.7	1.0	-45.1	-13.0	-32.1	

Rev. 03.03.09
Note: No other emissions were detected above the system noise floor.

This report shall not be reproduced except in full, without the written approval of UL CCS.

1.4MHz BAND WIDTH 16QAM (EIRP)

Compliance Certification Services
Above 1GHz High Frequency Substitution Measurement

Company: LG
Project #: 13U14853
Date: 02/22/13
Test Engineer: Lieu Nguyen
Configuration: EUT and AC Adapter
Mode: LTE Band 25, 1.4MHz 16QAM

Chamber	Pre-amplifer	Filter	Limit
5m Chamber B	T145 8449B	Filter 1	Part 24

f GHz	SG reading (dBm)	Ant. Pol. (H/V)	Distance (m)	Preamp (dB)	Filter (dB)	EIRP (dBm)	Limit (dBm)	Delta (dB)	Notes
Low Ch, (1850.7MHz)									
3.692	-1.6	V	3.0	35.4	1.0	-36.0	-13.0	-23.0	
5.540	-12.7	V	3.0	35.4	1.0	-47.1	-13.0	-34.1	
3.692	0.8	H	3.0	35.4	1.0	-33.6	-13.0	-20.6	
5.540	-10.2	H	3.0	35.4	1.0	-44.6	-13.0	-31.6	
Mid Ch, (1882.5MHz)									
3.764	0.1	V	3.0	35.3	1.0	-34.3	-13.0	-21.3	
5.645	-14.1	V	3.0	35.4	1.0	-48.5	-13.0	-35.5	
3.764	-0.7	H	3.0	35.3	1.0	-35.0	-13.0	-22.0	
5.645	-10.9	H	3.0	35.4	1.0	-45.4	-13.0	-32.4	
High Ch, (1914.3MHz)									
3.828	-2.2	V	3.0	35.3	1.0	-36.5	-13.0	-23.5	
5.741	-12.7	V	3.0	35.5	1.0	-47.2	-13.0	-34.2	
3.828	-3.4	H	3.0	35.3	1.0	-37.7	-13.0	-24.7	
5.741	-10.1	H	3.0	35.5	1.0	-44.5	-13.0	-31.5	

Rev. 03.03.09
Note: No other emissions were detected above the system noise floor.

This report shall not be reproduced except in full, without the written approval of UL CCS.

3.0MHz BAND WIDTH QPSK (EIRP)

Compliance Certification Services
Above 1GHz High Frequency Substitution Measurement

Company: LG
Project #: 13U14853
Date: 02/20/13
Test Engineer: Lieu Nguyen
Configuration: EUT and AC Adapter
Mode: LTE Band 25, 3MHz QPSK

Chamber	Pre-amplifer	Filter	Limit
5m Chamber B	T145 8449B	Filter 1	Part 24

f GHz	SG reading (dBm)	Ant. Pol. (H/V)	Distance (m)	Preamp (dB)	Filter (dB)	EIRP (dBm)	Limit (dBm)	Delta (dB)	Notes
Low Ch, (1851.5MHz)									
3.698	6.7	V	3.0	35.4	1.0	-27.6	-13.0	-14.6	
5.548	-8.4	V	3.0	35.4	1.0	-42.8	-13.0	-29.8	
3.698	-0.2	H	3.0	35.4	1.0	-34.5	-13.0	-21.5	
5.548	-12.4	H	3.0	35.4	1.0	-46.8	-13.0	-33.8	
Mid Ch, (1882.5MHz)									
3.760	0.6	V	3.0	35.3	1.0	-33.8	-13.0	-20.8	
5.640	-14.2	V	3.0	35.4	1.0	-48.6	-13.0	-35.6	
3.760	0.2	H	3.0	35.3	1.0	-34.1	-13.0	-21.1	
5.640	-12.5	H	3.0	35.4	1.0	-47.0	-13.0	-34.0	
High Ch, (1913.5MHz)									
3.822	-2.1	V	3.0	35.3	1.0	-36.4	-13.0	-23.4	
5.733	-13.9	V	3.0	35.4	1.0	-48.4	-13.0	-35.4	
3.822	-4.0	H	3.0	35.3	1.0	-38.3	-13.0	-25.3	
5.733	-12.2	H	3.0	35.4	1.0	-46.6	-13.0	-33.6	

Rev. 03.03.09
Note: No other emissions were detected above the system noise floor.

This report shall not be reproduced except in full, without the written approval of UL CCS.

3.0MHz BAND WIDTH 16QAM (EIRP)

Compliance Certification Services
Above 1GHz High Frequency Substitution Measurement

Company: LG
Project #: 13U14853
Date: 02/20/13
Test Engineer: Lieu Nguyen
Configuration: EUT and AC Adapter
Mode: LTE Band 25, 3MHz 16QAM

Chamber	Pre-amplifer	Filter	Limit
5m Chamber B	T145 8449B	Filter 1	Part 24

f GHz	SG reading (dBm)	Ant. Pol. (H/V)	Distance (m)	Preamp (dB)	Filter (dB)	EIRP (dBm)	Limit (dBm)	Delta (dB)	Notes
Low Ch, (1851.5MHz)									
3.699	2.7	V	3.0	35.4	1.0	-31.7	-13.0	-18.7	
5.548	-14.2	V	3.0	35.4	1.0	-48.6	-13.0	-35.6	
3.698	1.2	H	3.0	35.4	1.0	-33.1	-13.0	-20.1	
5.547	-11.5	H	3.0	35.4	1.0	-45.9	-13.0	-32.9	
Mid Ch, (1882.5MHz)									
3.761	-0.1	V	3.0	35.3	1.0	-34.5	-13.0	-21.5	
5.641	-14.4	V	3.0	35.4	1.0	-48.8	-13.0	-35.8	
3.760	1.9	H	3.0	35.3	1.0	-32.5	-13.0	-19.5	
5.640	-11.0	H	3.0	35.4	1.0	-45.5	-13.0	-32.5	
High Ch, (1913.5MHz)									
3.822	-3.7	V	3.0	35.3	1.0	-38.0	-13.0	-25.0	
5.734	-14.3	V	3.0	35.4	1.0	-48.8	-13.0	-35.8	
3.822	-2.8	H	3.0	35.3	1.0	-37.1	-13.0	-24.1	
5.734	-11.8	H	3.0	35.4	1.0	-46.2	-13.0	-33.2	

Rev. 03.03.09
Note: No other emissions were detected above the system noise floor.

This report shall not be reproduced except in full, without the written approval of UL CCS.

5.0MHz BAND WIDTH QPSK (EIRP)

Compliance Certification Services
Above 1GHz High Frequency Substitution Measurement

Company: LG
Project #: 13U14853
Date: 02/20/13
Test Engineer: Lieu Nguyen
Configuration: EUT and AC Adapter
Mode: LTE Band 25, 5MHz QPSK

Chamber	Pre-amplifer	Filter	Limit
5m Chamber B	T145 8449B	Filter 1	Part 24

f GHz	SG reading (dBm)	Ant. Pol. (H/V)	Distance (m)	Preamp (dB)	Filter (dB)	EIRP (dBm)	Limit (dBm)	Delta (dB)	Notes
Low Ch, (1852.5MHz)									
3.701	1.7	V	3.0	35.4	1.0	-32.6	-13.0	-19.6	
5.551	-11.8	V	3.0	35.4	1.0	-46.2	-13.0	-33.2	
3.700	2.1	H	3.0	35.4	1.0	-32.3	-13.0	-19.3	
5.550	-10.8	H	3.0	35.4	1.0	-45.2	-13.0	-32.2	
Mid Ch, (1882.5MHz)									
3.760	-1.2	V	3.0	35.3	1.0	-35.6	-13.0	-22.6	
5.641	-13.5	V	3.0	35.4	1.0	-47.9	-13.0	-34.9	
3.760	-1.7	H	3.0	35.3	1.0	-36.0	-13.0	-23.0	
5.641	-11.0	H	3.0	35.4	1.0	-45.4	-13.0	-32.4	
High Ch, (1912.5MHz)									
3.819	-1.1	V	3.0	35.3	1.0	-35.4	-13.0	-22.4	
5.730	-12.9	V	3.0	35.4	1.0	-47.4	-13.0	-34.4	
3.820	-1.1	H	3.0	35.3	1.0	-35.4	-13.0	-22.4	
5.731	-10.8	H	3.0	35.4	1.0	-45.2	-13.0	-32.2	

Rev. 03.03.09
Note: No other emissions were detected above the system noise floor.

This report shall not be reproduced except in full, without the written approval of UL CCS.

5.0MHz BAND WIDTH 16QAM (EIRP)

Compliance Certification Services
Above 1GHz High Frequency Substitution Measurement

Company: LG
Project #: 13U14853
Date: 02/20/13
Test Engineer: Lieu Nguyen
Configuration: EUT and AC Adapter
Mode: LTE Band 25, 5MHz 16QAM

Chamber	Pre-amplifer	Filter	Limit
5m Chamber B	T145 8449B	Filter 1	Part 24

f GHz	SG reading (dBm)	Ant. Pol. (H/V)	Distance (m)	Preamp (dB)	Filter (dB)	EIRP (dBm)	Limit (dBm)	Delta (dB)	Notes
Low Ch, (1852.5MHz)									
3.701	0.4	V	3.0	35.4	1.0	-33.9	-13.0	-20.9	
3.551	-17.4	V	3.0	35.4	1.0	-51.8	-13.0	-38.8	
3.700	2.8	H	3.0	35.4	1.0	-31.5	-13.0	-18.5	
5.551	-12.3	H	3.0	35.4	1.0	-46.7	-13.0	-33.7	
Mid Ch, (1882.5MHz)									
3.760	-1.8	V	3.0	35.3	1.0	-36.2	-13.0	-23.2	
5.640	-12.3	V	3.0	35.4	1.0	-46.7	-13.0	-33.7	
3.760	-1.9	H	3.0	35.3	1.0	-36.2	-13.0	-23.2	
5.640	-9.9	H	3.0	35.4	1.0	-44.4	-13.0	-31.4	
High Ch, (1912MHz)									
3.820	-0.2	V	3.0	35.3	1.0	-34.5	-13.0	-21.5	
5.730	-11.8	V	3.0	35.4	1.0	-46.3	-13.0	-33.3	
3.820	-3.4	H	3.0	35.3	1.0	-37.7	-13.0	-24.7	
5.731	-10.5	H	3.0	35.4	1.0	-44.9	-13.0	-31.9	

Rev. 03.03.09
Note: No other emissions were detected above the system noise floor.

This report shall not be reproduced except in full, without the written approval of UL CCS.

10.0MHz BAND WIDTH QPSK (EIRP)

Compliance Certification Services
Above 1GHz High Frequency Substitution Measurement

Company: LG
Project #: 13U14853
Date: 02/20/13
Test Engineer: Lieu Nguyen
Configuration: EUT and AC Adapter
Mode: LTE Band 25, 10MHz QPSK

Chamber	Pre-amplifer	Filter	Limit
5m Chamber B	T145 8449B	Filter 1	Part 24

f GHz	SG reading (dBm)	Ant. Pol. (H/V)	Distance (m)	Preamp (dB)	Filter (dB)	EIRP (dBm)	Limit (dBm)	Delta (dB)	Notes
Low Ch, (1855MHz)									
3.701	5.2	V	3.0	35.4	1.0	-29.1	-13.0	-16.1	
5.552	-10.0	V	3.0	35.4	1.0	-44.4	-13.0	-31.4	
3.701	5.0	H	3.0	35.4	1.0	-29.3	-13.0	-16.3	
5.551	-10.2	H	3.0	35.4	1.0	-44.6	-13.0	-31.6	
Mid Ch, (1882.5MHz)									
3.756	8.3	V	3.0	35.3	1.0	-26.1	-13.0	-13.1	
5.634	-9.2	V	3.0	35.4	1.0	-43.6	-13.0	-30.6	
3.755	4.2	H	3.0	35.3	1.0	-30.1	-13.0	-17.1	
5.634	-9.3	H	3.0	35.4	1.0	-43.8	-13.0	-30.8	
High Ch, (1910MHz)									
3.811	4.3	V	3.0	35.3	1.0	-30.0	-13.0	-17.0	
5.716	-11.9	V	3.0	35.4	1.0	-46.4	-13.0	-33.4	
3.811	5.2	H	3.0	35.3	1.0	-29.1	-13.0	-16.1	
5.716	-9.4	H	3.0	35.4	1.0	-43.9	-13.0	-30.9	

Rev. 03.03.09
Note: No other emissions were detected above the system noise floor.

This report shall not be reproduced except in full, without the written approval of UL CCS.

10.0MHz BAND WIDTH 16QAM (EIRP)

Compliance Certification Services
Above 1GHz High Frequency Substitution Measurement

Company: LG
Project #: 13U14853
Date: 02/20/13
Test Engineer: Lieu Nguyen
Configuration: EUT and AC Adapter
Mode: LTE Band 25, 10MHz 16QAM

Chamber	Pre-amplifer	Filter	Limit
5m Chamber B	T145 8449B	Filter 1	Part 24

f GHz	SG reading (dBm)	Ant. Pol. (H/V)	Distance (m)	Preamp (dB)	Filter (dB)	EIRP (dBm)	Limit (dBm)	Delta (dB)	Notes
Low Ch, (1855MHz)									
3.701	3.1	V	3.0	35.4	1.0	-31.2	-13.0	-18.2	
5.551	-14.9	V	3.0	35.4	1.0	-49.3	-13.0	-36.3	
3.701	5.0	H	3.0	35.4	1.0	-29.3	-13.0	-16.3	
5.551	-12.5	H	3.0	35.4	1.0	-46.9	-13.0	-33.9	
Mid Ch, (1882.5MHz)									
3.755	3.0	V	3.0	35.3	1.0	-31.4	-13.0	-18.4	
5.633	-13.8	V	3.0	35.4	1.0	-48.3	-13.0	-35.3	
3.755	-3.1	H	3.0	35.3	1.0	-37.4	-13.0	-24.4	
5.633	-15.2	H	3.0	35.4	1.0	-49.7	-13.0	-36.7	
High Ch, (1910MHz)									
3.811	3.9	V	3.0	35.3	1.0	-30.4	-13.0	-17.4	
5.716	-13.0	V	3.0	35.4	1.0	-47.5	-13.0	-34.5	
3.811	3.4	H	3.0	35.3	1.0	-30.9	-13.0	-17.9	
5.716	-11.8	H	3.0	35.4	1.0	-46.3	-13.0	-33.3	

Rev. 03.03.09
Note: No other emissions were detected above the system noise floor.

This report shall not be reproduced except in full, without the written approval of UL CCS.