FCC CFR47 PART 22 SUBPART H (B5)
FCC CFR47 PART 24 SUBPART E (B2)
FCC CFR47 PART 27 SUBPART H (B12 17)
FCC CFR47 PART 27 SUBPART L (B4)
FCC CFR47 PART 27 SUBPART M (B7 B41)
FCC CFR47 PART 90 SUBPART S (B26)

C2PC CERTIFICATION TEST REPORT

FOR

CDMA/LTE PHONE + BLUETOOTH, DTS/b/g/n

MODEL NUMBER: LGLS751, LG-LS751, LS751

FCC ID: ZNFLS751

REPORT NUMBER: 15I20527-E1 REVISION A

ISSUE DATE: MAY 14, 2015

Prepared for
LG ELECTRONICS MOBILECOMM U.S.A., INC
1000 SYLVAN AVENUE
ENGLEWOOD CLIFFS,
NEW JERSEY, 07632, U.S.A

Prepared by
UL VERIFICATION SERVICES
47173 BENICIA STREET
FREMONT, CA 94538, U.S.A.
TEL: (510) 771-1000
FAX: (510) 661-0888

NVLAP LAB CODE 200065-0

Revision History

Rev.	Issue Date	Revisions	Revised By
---	05/06/15	Initial Issue	D. Coronia
A	05/14/15	Updated antenna information on Pg. 13	D. Coronia

UL VERIFICATION SERVICES INC. FORM NO: CCSUP4701I
47173 BENICIA STREET, FREMONT, CA 94538, USA TEL: (510) 771-1000 FAX: (510) 661-0888
This report shall not be reproduced except in full, without the written approval of UL Verification Services Inc.

TABLE OF CONTENTS

1. ATTESTATION OF TEST RESULTS 4
2. TEST METHODOLOGY 5
3. FACILITIES AND ACCREDITATION 5
4. CALIBRATION AND UNCERTAINTY 5
4.1. MEASURING INSTRUMENT CALIBRATION 5
4.2. SAMPLE CALCULATION 5
4.3. MEASUREMENT UNCERTAINTY 6
5. EQUIPMENT UNDER TEST 7
5.1. DESCRIPTION OF EUT 7
5.2. MAXIMUM OUTPUT POWER 7
5.3. MAXIMUM OUTPUT POWER (LTE) 8
5.4. DESCRIPTION OF AVAILABLE ANTENNAS 13
5.5. DESCRIPTION OF TEST SETUP 14
6. TEST AND MEASUREMENT EQUIPMENT 17
7. SUMMARY TABLE 18
8. CONDUCTED POWER VERIFICATION 19
8.1. CDMA2000 19
8.1.1. 1xRTT 19
8.1.2. 1xEV-DO Release 0 21
8.1.1. 1xEV-DO Rev. A 23
8.2. LTE OUTPUT VERIFICATION 25
8.2.1. LTE OUTPUT RESULT 25
9. RADIATED TEST RESULTS 43
9.1. RADIATED POWER (ERP & EIRP) 43
9.1.1. ERP/EIRP Results 44
9.1.2. LTE ERP/EIRP RESULTS 45
9.1.3. ERP/EIRP PLOTS 56
9.2. FIELD STRENGTH OF SPURIOUS RADIATION 132
9.2.1. SPURIOUS RADIATION PLOTS 133
10. SETUP PHOTOS 209

This report shall not be reproduced except in full, without the written approval of UL Verification Services Inc.

1. ATTESTATION OF TEST RESULTS

COMPANY NAME:	LG ELECTRONICS MOBILECOMM U.S.A., INC
EUT DESCRIPTION:	CDMA/LTE Phone + Bluetooth, DTS/b/g/n
MODEL:	LGLS751, LG-LS751, LS751
SERIAL NUMBER:	1WEAA (Radiated), 1WEA0 (Conducted)
DATE TESTED:	APRIL 20 – MAY 1, 2015

APPLICABLE STANDARDS	
STANDARD	**TEST RESULTS**
FCC PART 22H, 24E, 27H, 27L, 27M and 90S	PASS

UL Verification Services Inc. tested the above equipment in accordance with the requirements set forth in the above standards. All indications of Pass/Fail in this report are opinions expressed by UL Verification Services Inc. based on interpretations and/or observations of test results. Measurement Uncertainties were not taken into account and are published for informational purposes only. The test results show that the equipment tested is capable of demonstrating compliance with the requirements as documented in this report.

Note: The results documented in this report apply only to the tested sample, under the conditions and modes of operation as described herein. This document may not be altered or revised in any way unless done so by UL Verification Services Inc. and all revisions are duly noted in the revisions section. Any alteration of this document not carried out by UL Verification Services Inc. will constitute fraud and shall nullify the document. This report must not be used by the client to claim product certification, approval, or endorsement by NVLAP, NIST, any agency of the Federal Government, or any agency of any government.

Approved & Released For
UL Verification Services Inc. By:

DAN CORONIA
CONSUMER TECHNOLOGY DIVISION
WiSE PROJECT LEAD
UL VERIFICATION SERVICES INC

Tested By:

KIYA KEDIDA
CONSUMER TECHNOLOGY DIVISION
WiSE LAB ENGINEER
UL VERIFICATION SERVICES INC

This report shall not be reproduced except in full, without the written approval of UL Verification Services Inc.

2. TEST METHODOLOGY

The tests documented in this report were performed in accordance with TIA-603-C, FCC CFR 47 Part 22, FCC CFR Part 24, FCC CFR 47 Part 27, and FCC CFR 47 Part 90.

3. FACILITIES AND ACCREDITATION

The test sites and measurement facilities used to collect data are located at 47173 and 47266 Benicia Street, Fremont, California, USA. Line conducted emissions are measured only at the 47173 address. The following table identifies which facilities were utilized for radiated emission measurements documented in this report. Specific facilities are also identified in the test results sections.

47173 Benicia Street	47266 Benicia Street
☒ Chamber A(IC: 2324B-1)	☐ Chamber D(IC: 2324B-4)
☒ Chamber B(IC: 2324B-2)	☐ Chamber E(IC: 2324B-5)
☐ Chamber C(IC: 2324B-3)	☒ Chamber F(IC: 2324B-6)
	☒ Chamber G(IC: 2324B-7)
	☐ Chamber H(IC: 2324B-8)

UL Verification Services Inc. is accredited by NVLAP, Laboratory Code 200065-0. The full scope of accreditation can be viewed at http://ts.nist.gov/standards/scopes/2000650.htm.

4. CALIBRATION AND UNCERTAINTY

4.1. MEASURING INSTRUMENT CALIBRATION

The measuring equipment utilized to perform the tests documented in this report has been calibrated in accordance with the manufacturer's recommendations, and is traceable to recognized national standards

4.2. SAMPLE CALCULATION

Where relevant, the following sample calculation is provided:

EIRP = PSA reading with EUT worst orientation (dBm) + Path loss (dB) – cable loss(between the SG and substitution antenna) + Substitution Antenna Factor (dBi)

ERP = PSA reading with EUT worst orientation (dBm) + Path loss (dB) – cable loss(between the SG and substitution antenna)

(Path loss = Signal generator output – PSA reading with substitution antenna)

This report shall not be reproduced except in full, without the written approval of UL Verification Services Inc.

4.3. MEASUREMENT UNCERTAINTY

Where relevant, the following measurement uncertainty levels have been estimated for tests performed on the apparatus:

PARAMETER	UNCERTAINTY
Conducted Disturbance, 0.15 to 30 MHz	3.52 dB
Radiated Disturbance, 30 to 1000 MHz	4.94 dB
Radiated Disturbance, 1GHz to 40GHz	4.94 dB

Uncertainty figures are valid to a confidence level of 95%.

This report shall not be reproduced except in full, without the written approval of UL Verification Services Inc.

5. EQUIPMENT UNDER TEST

5.1. DESCRIPTION OF EUT

The EUT is a CDMA/LTE PHONE + BLUETOOTH, DTS/b/g/n.

5.2. MAXIMUM OUTPUT POWER

The transmitter has a maximum peak conducted and radiated ERP / EIRP output powers as follows:

FCC Part 22 and 24						
Band	Frequency Range(MHz)	Modulation	Conducted		Radiated	
			AVG(dBm)	AVG(mW)	AVG(dBm)	AVG(mW)
BC10	816~824	1xRTT	25.0	316.23	22.74	187.93
	816~824	EVDO REL. 0	24.8	302.00	22.60	181.97
BC0	824~849	1xRTT	24.6	288.40	23.50	223.87
	824~849	EVDO REL. 0	24.6	288.40	23.30	213.80
BC1	1850~1910	1xRTT	24.6	288.40	26.79	477.53
	1850~1910	EVDO REL. 0	24.7	295.12	27.15	518.80

This report shall not be reproduced except in full, without the written approval of UL Verification Services Inc.

5.3. MAXIMUM OUTPUT POWER (LTE)

The transmitter has a maximum peak conducted and radiated ERP/EIRP output powers as follows:

LTE Band 2

FCC Part 24							
Band	Frequency Range(MHz)	BandWidth (MHz)	Modulation	Conducted		Radiated	
				AVG(dBm)	AVG(mW)	AVG(dBm)	AVG(mW)
LTE2	1850~1910	20MHz	QPSK	23.7	234.42	25.90	389.05
			16QAM	22.7	186.21	25.24	334.20
		15MHz	QPSK	23.7	234.42	26.50	446.68
			16QAM	22.7	186.21	26.00	398.11
		10MHz	QPSK	23.6	229.09	26.00	398.11
			16QAM	22.7	186.21	25.40	346.74
		5MHz	QPSK	23.7	234.42	25.80	380.19
			16QAM	22.7	186.21	25.20	331.13
		3MHz	QPSK	23.5	226.33	26.00	398.11
			16QAM	22.7	186.21	25.50	354.81
		1.4MHz	QPSK	23.6	229.09	26.00	398.11
			16QAM	22.7	186.21	25.60	363.08

LTE Band 4

FCC Part 27							
Band	Frequency Range(MHz)	BandWidth (MHz)	Modulation	Conducted		Radiated	
				AVG(dBm)	AVG(mW)	AVG(dBm)	AVG(mW)
LTE4	1710~1755	20MHz	QPSK	23.4	220.41	22.13	163.31
			16QAM	22.7	186.21	20.93	123.88
		15MHz	QPSK	23.3	215.23	22.25	167.88
			16QAM	22.7	186.21	21.84	152.76
		10MHz	QPSK	23.3	212.28	22.13	163.31
			16QAM	22.7	186.21	21.36	136.77
		5MHz	QPSK	23.6	229.77	22.20	165.96
			16QAM	22.7	184.67	21.24	133.05
		3MHz	QPSK	23.3	214.08	22.35	171.79
			16QAM	22.7	186.21	22.15	164.06
		1.4MHz	QPSK	23.2	211.03	22.21	166.34
			16QAM	22.7	186.21	21.90	154.88

This report shall not be reproduced except in full, without the written approval of UL Verification Services Inc.

LTE Band 5

FCC Part 22							
Band	Frequency Range(MHz)	BandWidth (MHz)	Modulation	Conducted		Radiated	
				AVG(dBm)	AVG(mW)	AVG(dBm)	AVG(mW)
LTE5	824~849	10MHz	QPSK	23.1	204.46	21.80	151.36
			16QAM	22.6	183.99	21.20	131.83
		5MHz	QPSK	23.1	204.70	21.94	156.31
			16QAM	22.7	187.62	20.94	124.17
		3MHz	QPSK	23.1	206.03	22.35	171.79
			16QAM	22.5	177.88	21.93	155.96
		1.4MHz	QPSK	23.2	208.91	21.80	151.36
			16QAM	22.9	193.50	21.40	138.04

LTE Band 12

FCC Part 27							
Band	Frequency Range(MHz)	BandWidth (MHz)	Modulation	Conducted		Radiated	
				AVG(dBm)	AVG(mW)	AVG(dBm)	AVG(mW)
LTE12	699~716	10MHz	QPSK	23.8	238.92	19.70	93.33
			16QAM	23.2	208.93	18.90	77.62
		5MHz	QPSK	24.1	259.45	19.40	87.10
			16QAM	23.1	205.85	18.50	70.79
		3MHz	QPSK	23.7	234.58	19.70	93.33
			16QAM	23.0	199.53	19.40	87.10
		1.4MHz	QPSK	23.8	240.64	19.56	90.36
			16QAM	23.2	208.37	19.23	83.75

This report shall not be reproduced except in full, without the written approval of UL Verification Services Inc.

LTE Band 25

FCC Part 24							
Band	Frequency Range(MHz)	BandWidth (MHz)	Modulation	Conducted		Radiated	
				AVG(dBm)	AVG(mW)	AVG(dBm)	AVG(mW)
LTE25	1850~1915	20MHz	QPSK	23.7	232.83	25.90	389.05
			16QAM	22.7	186.21	25.24	334.20
		15MHz	QPSK	23.6	226.76	26.50	446.68
			16QAM	22.7	186.21	26.00	398.11
		10MHz	QPSK	23.3	214.08	26.00	398.11
			16QAM	22.7	186.21	25.40	346.74
		5MHz	QPSK	23.2	209.11	25.80	380.19
			16QAM	22.7	186.21	25.20	331.13
		3MHz	QPSK	23.4	219.43	26.00	398.11
			16QAM	22.7	186.21	25.50	354.81
		1.4MHz	QPSK	23.3	214.92	26.00	398.11
			16QAM	22.7	186.21	25.60	363.08

LTE Band 26

FCC Part 90							
Band	Frequency Range(MHz)	BandWidth (MHz)	Modulation	Conducted		Radiated	
				AVG(dBm)	AVG(mW)	AVG(dBm)	AVG(mW)
LTE26	814~824	10MHz	QPSK	23.3	211.85	21.70	147.91
			16QAM	23.1	203.49	20.90	123.03
		5MHz	QPSK	23.0	201.41	21.30	134.90
			16QAM	22.5	176.94	20.40	109.65
		3MHz	QPSK	23.0	201.39	21.40	138.04
			16QAM	23.0	201.00	21.00	125.89
		1.4MHz	QPSK	23.2	210.22	21.20	131.83
			16QAM	23.0	197.77	21.00	125.89

This report shall not be reproduced except in full, without the written approval of UL Verification Services Inc.

LTE Band 26

FCC Part 22							
Band	Frequency Range(MHz)	BandWidth (MHz)	Modulation	Conducted		Radiated	
				AVG(dBm)	AVG(mW)	AVG(dBm)	AVG(mW)
LTE26	824~849	15MHz	QPSK	23.5	223.72	21.94	156.31
			16QAM	23.2	208.15	21.54	142.56
		10MHz	QPSK	23.3	213.04	21.80	151.36
			16QAM	22.8	190.88	21.20	131.83
		5MHz	QPSK	23.6	229.56	21.94	156.31
			16QAM	22.6	182.45	20.94	124.17
		3MHz	QPSK	23.0	201.16	22.35	171.79
			16QAM	22.6	182.63	21.93	155.96
		1.4MHz	QPSK	23.2	209.45	21.80	151.36
			16QAM	22.7	184.89	21.40	138.04

This report shall not be reproduced except in full, without the written approval of UL Verification Services Inc.

LTE Band 41

FCC Part 27							
Band	Frequency Range(MHz)	BandWidth (MHz)	Modulation	Conducted		Radiated	
				AVG(dBm)	AVG(mW)	AVG(dBm)	AVG(mW)
LTE41	2496~2690	20MHz	QPSK	23.8	241.81	25.61	363.92
			16QAM	22.9	195.54	25.11	324.34
		15MHz	QPSK	23.7	231.80	25.51	355.63
			16QAM	22.9	195.97	25.01	316.96
		10MHz	QPSK	23.5	224.22	25.80	380.19
			16QAM	22.9	195.42	25.70	371.54
		5MHz	QPSK	23.8	239.89	25.41	347.54
			16QAM	23.0	198.52	24.71	295.80

This report shall not be reproduced except in full, without the written approval of UL Verification Services Inc.

5.4. DESCRIPTION OF AVAILABLE ANTENNAS

The radio utilizes a PIFA antenna for the [List the bands supported] with a maximum peak gain as follow:

Frequency (MHz)	Peak Gain (dBi)
CDMA BC1 / LTE2, 1850~1910MHz	0.24
LTE4, 1710~1755MHz	-1.07
CDMA BC0 / LTE5, 824~849MHz	-1.25
LTE12, 699~716MHz	-3.67
LTE25, 1850~1915MHz	0.31
CDMA BC10 / LTE26, 814~849MHz	-1.40
LTE41, 2496~2690MHz	- 0.32

This report shall not be reproduced except in full, without the written approval of UL Verification Services Inc.

5.5. DESCRIPTION OF TEST SETUP

SUPPORT EQUIPMENT

Support Equipment List				
Description	Manufacturer	Model	Serial Number	FCC ID
AC Adapter	LG	MCS-02WR	RA4Y1031433	N/A
Earphone	LG	N/A	N/A	N/A

I/O CABLES (CONDUCTED SETUP)

I/O Cable List						
Cable No	Port	# of identical ports	Connector Type	Cable Type	Cable Length (m)	Remarks
1	RF Out	1	Spectrum Analyzer	Shielded	None	NA
2	Antenna Port	1	EUT	Shielded	0.1m	NA
3	RF In/Out	1	Communication Test Set	Shielded	1m	NA

I/O CABLES (RADIATED SETUP)

I/O CABLE LIST						
Cable No.	Port	# of Identical Ports	Connector Type	Cable Type	Cable Length	Remarks
1	USB	1	AC Adapter	Un-shielded	1.2m	NA
2	Jack	1	Headset	Shielded	1m	NA
3	RF In/out	1	Communication Test Set	Un-shielded	2m	NA

TEST SETUP

The EUT is continuously communicated to the call box during the tests.

This report shall not be reproduced except in full, without the written approval of UL Verification Services Inc.

SETUP DIAGRAM FOR TESTS (CONDUCTED TEST SETUP)

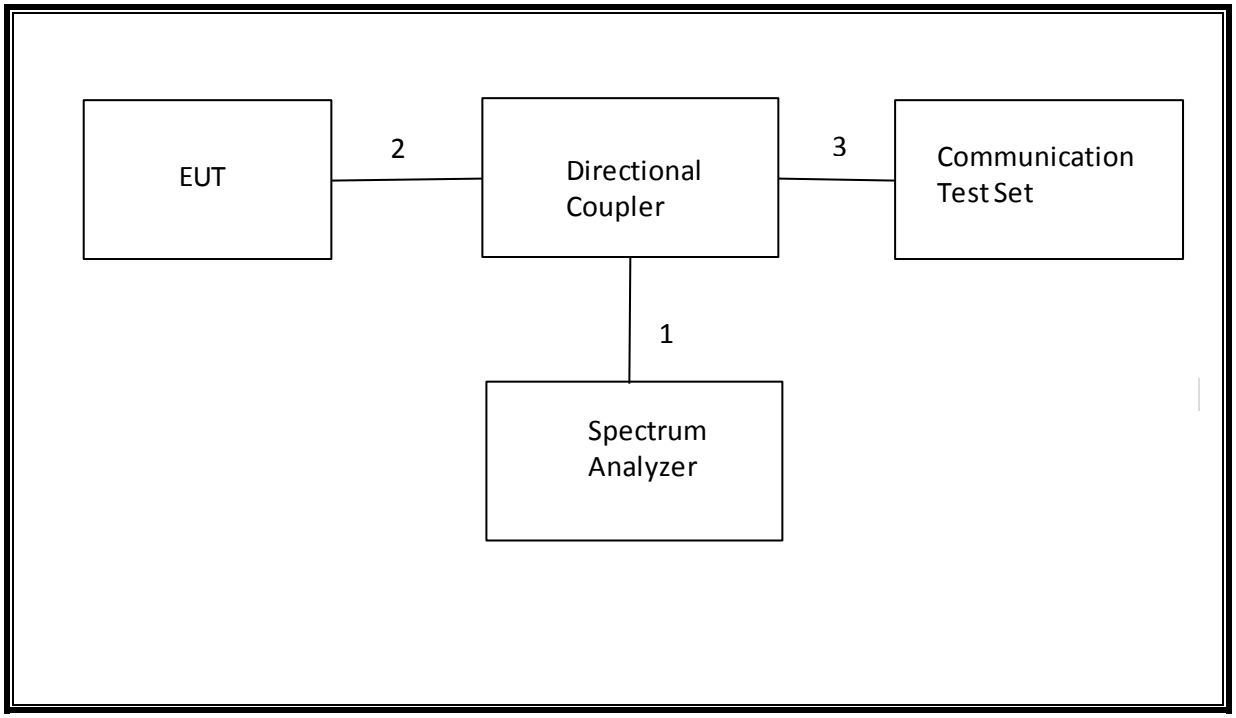

This report shall not be reproduced except in full, without the written approval of UL Verification Services Inc.

SETUP DIAGRAM FOR TESTS (RADIATED TEST SETUP)

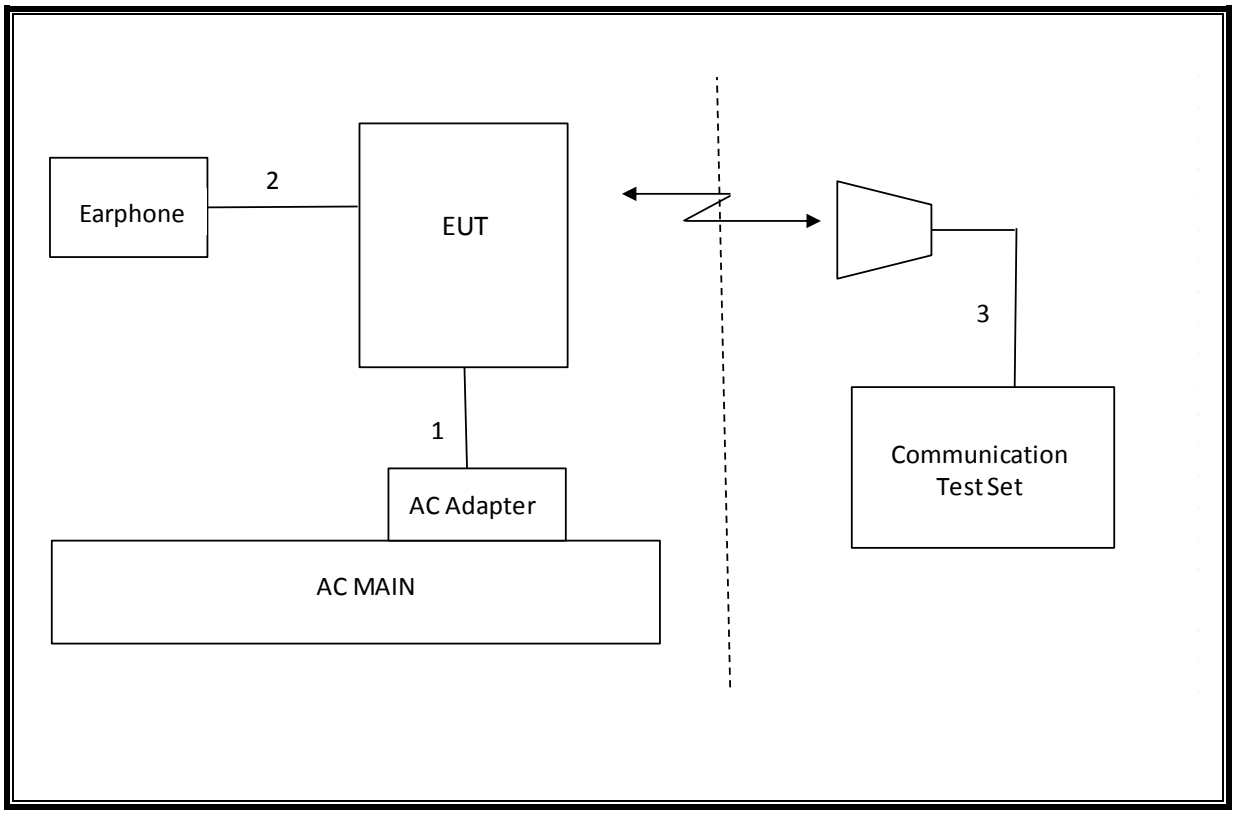

This report shall not be reproduced except in full, without the written approval of UL Verification Services Inc.

6. TEST AND MEASUREMENT EQUIPMENT

The following test and measurement equipment was utilized for the tests documented in this report:

TEST EQUIPMENT LIST				
Description	Manufacturer	Model	Asset	Cal Due
Spectrum Analyzer, 44 GHz	Agilent / HP	E4446A	123	10/28/15
Antenna, Bilog, 2 GHz	Sunol Sciences	JB1	T243	12/08/15
Antenna, Horn, 18 GHz	EMCO	3115	C00783	10/25/15
Antenna, Horn, 18 GHz	EMCO	3115	C00784	10/25/15
Highpass Filter, 2.7 GHz	Micro-Tronics	HPM13194	N02687	CNR
Highpass Filter, 1.5 GHz	Micro-Tronics	HPM13193	N02688	CNR
Temperature / Humidity Chamber	Thermotron	SE 600-10-10	C00930	05/12/15
Communications Test Set	R&S	CMW500	T159	07/02/15
DC power supply, 8 V @ 3 A or 15 V	Agilent / HP	E3610A	None	CNR
Vector signal generator, 6 GHz	Agilent / HP	E4438C	None	06/18/15
Antenna, Tuned Dipole 400~1000	ETS	6502	158071	10/14/15
Directional Coupler	RF-Lambda	RFDC5M06G15	None	CNR
Antenna, Horn, 26.5 GHz	ARA	MWH-1826/B	C00589	12/17/15

Test Software List			
Description	Manufacturer	Model	Version
Radiated Software	UL	UL EMC	Version 9.5, 07/22/14
Conducted Software	UL	UL EMC	Version 9.5, 05/17/14
CLT Software	UL	UL RF	Version 1.0, 02/02/15
Antenna Port Software	UL	UL RF	Version 2.1.1.1, 1/20/15

This report shall not be reproduced except in full, without the written approval of UL Verification Services Inc.

7. SUMMARY TABLE

C2PC reason: Please see LG FCC Class II cover letter for details.

FCC Part Section	RSS Section(s)	Test Description	Test Limit	Test Condition	Test Result	Note
2.1049	N/A	Occupied Band width (99%)	N/A	Conducted	Pass	See Original
22.917(a) 24.238(a) 27.53(g) 90.691	RSS-132(4.5.1) RSS-133(6.5.1) RSS-139(6.5.1)	Band Edge / Conducted Spurious Emission	-13dBm		Pass	See Original
27.53(m)	RSS-199(4.5)		-25dBm		Pass	See Original
2.1046	N/A	Conducted output power	N/A		Pass	See Original
27.53(m) 90.691	RSS-199(4.5)	Emission Mask			Pass	See Original
22.355 24.235 27.54 90.213	RSS-132(4.3) RSS-133(6.3) RSS-139(6.3) RSS-199(4.3)	Frequency Stability	2.5PPM		Pass	See Original
22.913(a)(2)	RSS-132(4.4)	Effective Radiated Power	38 dBm	Radiated	Pass	23.50 dBm
27.50(c)(10)	N/A		34.77 dBm		Pass	19.70 dBm
90.635	N/A		50dBm		Pass	21.70 dBm
24.232(c) 27.50(h)(2)	RSS-133(6.4) RSS-199(4.4)	Equivalent Isotropic Radiated Power	33dBm		Pass	27.15 dBm
27.50(d)(4)	RSS-139(6.4)		30dBm		Pass	22.35 dBm
22.917(a) 24.238(a) 27.53(g)	RSS-132(4.5.1) RSS-133(6.5.1) RSS-139(6.5.1)	Radiated Spurious Emission	-13dBm		Pass	-28.5 dBm
27.53(m)	RSS-199(4.5)		-25dBm		Pass	-31.2 dBm

This report shall not be reproduced except in full, without the written approval of UL Verification Services Inc.

8. CONDUCTED POWER VERIFICATION

8.1. CDMA2000

8.1.1. 1xRTT

TEST PROCEDURE

This procedure assumes the Agilest 8960 Test Set has the following applications installed and with valid license.

Application	Rev, License
CDMA2000 Mobile Test	B.13.08, L

- Call Setup > Shift & Preset
- Cell Info > Cell Parameters > System ID (SID) > 7
  > Network ID (NID) > 1
- Protocol Rev > 6 (IS-2000-0)
- Radio Config (RC) > Please see following table or details
- FCH Service Option (SO) Setup > Please see following table or details
- Traffic Data Rate > Full
- TDSO SCH Info > F-SCH Parameters > F-SCH Data Rate > 153.6 kbps
  > R-SCH Parameters > R-SCH Data Rate > 153.6 kbps
- Rvs Power Ctrl > Active bits
  - Rvs Power Ctrl > All Up bits (Maximum TxPout)

This report shall not be reproduced except in full, without the written approval of UL Verification Services Inc.

CDMA2000 OUTPUT POWER RESULT

Band	Mode	Ch	Freq. (MHz)	Avg Pwr (dBm)
BC10	RC1, SO55 (Loopback)	476	817.90	25.0
		580	820.50	25.0
		684	823.10	24.6
	RC3, SO55 (Loopback)	476	817.90	25.0
		580	820.50	25.0
		684	823.10	24.6
	RC3, SO32 (+F-SCH)	476	817.90	25.0
		580	820.50	25.0
		684	823.10	24.7

Band	Mode	Ch	Freq. (MHz)	Avg Pwr (dBm)
BC0	RC1, SO55 (Loopback)	1013	824.70	24.6
		384	836.52	24.4
		777	848.31	24.4
	RC3, SO55 (Loopback)	1013	824.70	24.6
		384	836.52	24.4
		777	848.31	24.4
	RC3, SO32 (+F-SCH)	1013	824.70	24.6
		384	836.52	24.4
		777	848.31	24.4

Band	Mode	Ch	Freq. (MHz)	Avg Pwr (dBm)
BC1	RC1, SO55 (Loopback)	25	1851.25	24.6
		600	1880.00	24.6
		1175	1908.75	24.5
	RC3, SO55 (Loopback)	25	1851.25	24.7
		600	1880.00	24.7
		1175	1908.75	24.5
	RC3, SO32 (+F-SCH)	25	1851.25	24.6
		600	1880.00	24.7
		1175	1908.75	24.5

This report shall not be reproduced except in full, without the written approval of UL Verification Services Inc.

8.1.2. 1xEV-DO Release 0

TEST PROCEDURE

This procedure assumes the Agilent 8960 Test Set has the following applications installed and with valid license.

Application	Rev, License
1xEV-DO Terminal Test	A.09.13

EVDO Release 0 - RTAP

- Call Setup > Shift & Preset
- Call Control:
  - Access Network Info > Cell Parameters > Sector ID > 00000000 > Subnet Mask > 0
  - Generator Info > Termination Parameters > Max Forward Packet Duration > 16 Slots
- Call Parms:
  - Cell Power > -105.5 dBm/1.23 MHz
  - Cell Band > (Select US Cellular or US PCS)
  - Channel > (Enter channel number)
  - Application Config > Enhanced Test Application Protocol > RTAP
  - RTAP Rate > 153.6 kbps
  - Rvs Power Ctrl > Active bits
  - Protocol Rel > 0 (1xEV-DO)
- Press “Start Data Connection” when “Session Open” appear in “Active Cell”
- Rvs Power Ctrl > All Up bits (Maximum TxPout)

EVDO Release 0 - FTAP

- Call Setup > Shift & Preset
- Call Control:
  - Access Network Info > Cell Parameters > Sector ID > 00000000 > Subnet Mask > 0
  - Generator Info > Termination Parameters > Max Forward Packet Duration > 16 Slots
- Call Parms:
  - Cell Power > -105.5 dBm/1.23 MHz
  - Cell Band > (Select US Cellular or US PCS)
  - Channel > (Enter channel number)
  - Application Config > Enhanced Test Application Protocol > FTAP (default)
  - FTAP Rate > 307.2 kbps (2 Slot, QPSK)
  - Rvs Power Ctrl > Active bits
  - Protocol Rel > 0 (1xEV-DO)
- Press “Start Data Connection” when “Session Open” appear in “Active Cell”
- Rvs Power Ctrl > All Up bits (Maximum TxPout)

This report shall not be reproduced except in full, without the written approval of UL Verification Services Inc.

1XEVDO REL 0 OUTPUT POWER RESULT

Band	FTAP Rate	Channel	f (MHz)	Avg Pwr (dBm)
BC10	307.2 kbps (2 slot, QPSK)	476	817.90	24.8
		580	820.50	24.8
		684	823.10	24.4

Band	FTAP Rate	Channel	f (MHz)	Avg Pwr (dBm)
BC0	307.2 kbps (2 slot, QPSK)	1013	824.70	24.6
		384	836.52	24.5
		777	848.31	24.5

Band	FTAP Rate	Channel	f (MHz)	Avg Pwr (dBm)
BC1	307.2 kbps (2 slot, QPSK)	25	1851.25	24.6
		600	1880.00	24.7
		1175	1908.75	24.6

This report shall not be reproduced except in full, without the written approval of UL Verification Services Inc.

8.1.1. 1xEV-DO Rev. A

TEST PROCEDURE

This procedure assumes the Agilent 8960 Test Set has the following applications installed and with valid license.

Application	Rev, License
1xEV-DO Terminal Test	A.09.13

EVDO Release A – RETAP

- Call Setup > Shift & Preset
- Cell Power > -60 dBm/1.23 MHz
- Protocol Rev > A (1xEV-DO-A)
- Application Config > Enhanced Test Application Protocol > RETAP
- R-Data Pkt Size > 4096
- Protocol Subtype Config > Release A Physical Layer Subtype > Subtype 2

> PL Subtype 2 Access Channel MAC Subtype > Default (Subtype 0)

- Access Network Info > Cell Parameters > Sector ID > 00000000 > Subnet Mask > 0
- Generator Info > Termination Parameters > Max Forward Packet Duration >16 Slots > ACK R-Data After > Subpacket 0 (All ACK)
- Rvs Power Ctrl > All Up bits (to get the maximum power)

EVDO Release A - FETAP

- Call Setup > Shift & Preset
- Cell Power > -60 dBm/1.23 MHz
- Protocol Rev > A (1xEV-DO-A)
- Application Config > Enhanced Test Application Protocol > FETAP
- F-Traffic Format > 4 (1024, 2,128) Canonical (307.2k, QPSK)
- Protocol Subtype Config > Release A Physical Layer Subtype > Subtype 2

> PL Subtype 2 Access Channel MAC Subtype > Default (Subtype 0)

- Access Network Info > Cell Parameters > Sector ID > 00000000 > Subnet Mask > 0
- Generator Info > Termination Parameters > Max Forward Packet Duration >16 Slots > ACK R-Data After > Subpacket 0 (All ACK)
- Rvs Power Ctrl > All Up bits (to get the maximum power)

This report shall not be reproduced except in full, without the written approval of UL Verification Services Inc.

1xEVDO REV A OUTPUT RESULT

Band	FETAP Traffic Format	Channel	f (MHz)	Avg Pwr (dBm)
BC10	307.2k, QPSK/ ACK channel is transmitted at all the slots	476	817.90	24.8
		580	820.50	24.8
		684	823.10	24.4

Band	FETAP Traffic Format	Channel	f (MHz)	Avg Pwr (dBm)
BC0	307.2k, QPSK/ ACK channel is transmitted at all the slots	1013	824.70	24.6
		384	836.52	24.5
		777	848.31	24.5

Band	FETAP Traffic Format	Channel	f (MHz)	Avg Pwr (dBm)
BC1	307.2k, QPSK/ ACK channel is transmitted at all the slots	25	1851.25	24.6
		600	1880.00	24.6
		1175	1908.75	24.5

This report shall not be reproduced except in full, without the written approval of UL Verification Services Inc.

8.2. LTE OUTPUT VERIFICATION

8.2.1. LTE OUTPUT RESULT

LTE Band 2

Band	BW (MHz)	Mode	RB Allocation	RB offset	Target MPR	Avg Pwr (dBm)		
						18700	18900	19100
						1860 MHz	1880 MHz	1900 MHz
LTE Band 2	20	QPSK	1	0	0	23.7	23.6	23.7
			1	49	0	23.5	23.7	23.5
			1	99	0	23.4	23.7	23.3
			50	0	1	22.5	22.5	22.5
			50	25	1	22.4	22.5	22.4
			50	49	1	22.4	22.4	22.4
			100	0	1	22.5	22.4	22.3
		16QAM	1	0	1	22.0	22.7	22.7
			1	49	1	22.0	22.7	22.6
			1	99	1	22.0	22.4	22.5
			50	0	2	21.3	21.6	21.5
			50	25	2	21.3	21.6	21.3
			50	49	2	21.2	21.6	21.3
			100	0	2	21.4	21.4	21.2

Band	BW (MHz)	Mode	RB Allocation	RB offset	Target MPR	Avg Pwr (dBm)		
						18675	18900	19125
						1857.5 MHz	1880 MHz	1902.5 MHz
LTE Band 2	15	QPSK	1	0	0	23.6	23.7	23.4
			1	37	0	23.3	23.7	23.5
			1	74	0	23.4	23.7	23.3
			36	0	1	22.5	22.5	22.3
			36	18	1	22.5	22.5	22.4
			36	35	1	22.4	22.5	22.5
			75	0	1	22.4	22.5	22.4
		16QAM	1	0	1	22.7	22.7	22.7
			1	37	1	22.7	22.7	22.7
			1	74	1	22.5	22.7	22.7
			36	0	2	21.5	21.5	21.3
			36	18	2	21.4	21.5	21.3
			36	35	2	21.4	21.5	21.3
			75	0	2	21.4	21.5	21.3

This report shall not be reproduced except in full, without the written approval of UL Verification Services Inc.

Band	BW (MHz)	Mode	RB Allocation	RB offset	Target MPR	Avg Pwr (dBm)		
						18650	18900	19150
						1855 MHz	1880 MHz	1905 MHz
LTE Band 2	10	QPSK	1	0	0	23.6	23.6	23.4
			1	24	0	23.4	23.5	23.3
			1	49	0	23.4	23.5	23.3
			25	0	1	22.5	22.5	22.4
			25	12	1	22.4	22.5	22.4
			25	24	1	22.5	22.5	22.4
			50	0	1	22.4	22.5	22.3
		16QAM	1	0	1	22.7	22.7	22.7
			1	24	1	22.7	22.7	22.7
			1	49	1	22.6	22.7	22.7
			25	0	2	21.5	21.5	21.4
			25	12	2	21.5	21.5	21.3
			25	24	2	21.5	21.5	21.3
			50	0	2	21.5	21.5	21.3

Band	BW (MHz)	Mode	RB Allocation	RB offset	Target MPR	Avg Pwr (dBm)		
						18625	18900	19175
						1852.5 MHz	1880 MHz	1907.5 MHz
LTE Band 2	5	QPSK	1	0	0	23.3	23.5	23.3
			1	12	0	23.5	23.7	23.5
			1	24	0	23.2	23.5	23.3
			12	0	1	22.5	22.3	22.4
			12	6	1	22.4	22.4	22.3
			12	11	1	22.4	22.4	22.3
			25	0	1	22.3	22.3	22.3
		16QAM	1	0	1	22.2	22.6	22.7
			1	12	1	22.2	22.4	22.7
			1	24	1	22.1	22.4	22.6
			12	0	2	21.2	21.1	21.6
			12	6	2	21.1	21.2	21.3
			12	11	2	21.2	21.3	21.3
			25	0	2	21.4	21.0	21.2

This report shall not be reproduced except in full, without the written approval of UL Verification Services Inc.

Band	BW (MHz)	Mode	RB Allocation	RB offset	Target MPR	Avg Pwr (dBm)		
						18615	18900	19185
						1851.5 MHz	1880 MHz	1908.5 MHz
LTE Band 2	3	QPSK	1	0	0	23.3	23.2	23.1
			1	7	0	23.5	23.4	23.1
			1	14	0	23.5	23.2	23.0
			6	0	1	22.4	22.3	22.3
			6	3	1	22.4	22.4	22.2
			6	5	1	22.5	22.3	22.2
			15	0	1	22.5	22.4	22.2
		16QAM	1	0	1	22.7	22.7	22.4
			1	7	1	22.7	22.3	21.9
			1	14	1	22.7	22.5	21.9
			6	0	2	21.1	20.9	21.4
			6	3	2	21.3	20.9	21.3
			6	5	2	21.3	20.9	21.4
			15	0	2	21.3	21.2	21.3

Band	BW (MHz)	Mode	RB Allocation	RB offset	Target MPR	Avg Pwr (dBm)		
						18607	18900	19193
						1850.7 MHz	1880 MHz	1909.3 MHz
LTE Band 2	1.4	QPSK	1	0	0	23.2	23.4	23.0
			1	2	0	23.3	23.5	23.1
			1	5	0	23.3	23.5	22.9
			3	0	0	23.3	23.4	23.2
			3	1	0	23.6	23.4	23.3
			3	2	0	23.3	23.4	23.1
			6	0	1	22.4	22.4	22.3
		16QAM	1	0	1	22.7	22.7	22.4
			1	2	1	22.7	22.7	22.4
			1	5	1	22.7	22.7	22.4
			3	0	1	22.3	22.3	22.6
			3	1	1	22.2	22.4	22.7
			3	2	1	22.1	22.5	22.5
			6	0	2	21.2	21.2	21.5

This report shall not be reproduced except in full, without the written approval of UL Verification Services Inc.

LTE Band 4

Band	BW (MHz)	Mode	RB Allocation	RB offset	Target MPR	Avg Pwr (dBm)		
						20050	20175	20300
						1720 MHz	1732.5 MHz	1745 MHz
LTE Band 4	20	QPSK	1	0	0	23.2	23.4	23.2
			1	49	0	23.4	23.3	23.4
			1	99	0	22.9	23.1	23.0
			50	0	1	22.2	22.3	22.3
			50	24	1	22.2	22.2	22.2
			50	50	1	22.1	22.2	22.1
			100	0	1	22.2	22.3	22.3
		16QAM	1	0	1	22.3	22.4	22.6
			1	49	1	22.7	22.0	22.6
			1	99	1	22.0	21.7	22.4
			50	0	2	21.2	21.2	21.2
			50	24	2	21.1	21.1	21.0
			50	50	2	21.1	21.0	21.0
			100	0	2	21.2	21.3	21.3

Band	BW (MHz)	Mode	RB Allocation	RB offset	Target MPR	Avg Pwr (dBm)		
						20025	20175	20325
						1717.5 MHz	1732.5 MHz	1747.5 MHz
LTE Band 4	15	QPSK	1	0	0	23.2	23.2	23.3
			1	37	0	23.1	23.3	23.0
			1	74	0	23.2	23.2	22.8
			36	0	1	22.2	22.3	22.2
			36	20	1	22.1	22.2	22.2
			36	39	1	22.2	22.2	22.2
			75	0	1	22.1	22.3	22.2
		16QAM	1	0	1	22.7	22.7	22.7
			1	37	1	22.7	22.7	22.7
			1	74	1	22.6	22.7	22.7
			36	0	2	21.0	21.2	21.2
			36	20	2	21.1	21.1	21.3
			36	39	2	21.2	21.1	21.0
			75	0	2	21.1	21.2	21.2

This report shall not be reproduced except in full, without the written approval of UL Verification Services Inc.

Band	BW (MHz)	Mode	RB Allocation	RB offset	Target MPR	Avg Pwr (dBm)		
						20000	20175	20350
						1715 MHz	1732.5 MHz	1750 MHz
LTE Band 4	10	QPSK	1	0	0	23.3	22.9	23.1
			1	25	0	23.1	23.2	23.1
			1	49	0	23.0	23.2	22.9
			25	0	1	22.3	22.3	22.3
			25	12	1	22.3	22.1	22.2
			25	25	1	22.1	22.2	22.1
			50	0	1	22.3	22.2	22.2
		16QAM	1	0	1	22.7	22.7	22.4
			1	25	1	22.7	22.5	21.8
			1	49	1	22.7	22.6	22.0
			25	0	2	21.0	21.3	21.2
			25	12	2	21.2	21.1	21.2
			25	25	2	21.0	21.2	21.1
			50	0	2	21.1	21.1	21.1

Band	BW (MHz)	Mode	RB Allocation	RB offset	Target MPR	Avg Pwr (dBm)		
						19975	20175	20375
						1712.5 MHz	1732.5 MHz	1752.5 MHz
LTE Band 4	5	QPSK	1	0	0	22.9	23.3	23.2
			1	12	0	23.1	23.6	23.3
			1	24	0	23.0	23.3	23.3
			12	0	1	22.2	22.1	22.2
			12	7	1	22.1	22.1	22.2
			12	13	1	22.2	22.1	22.2
			25	0	1	22.1	22.2	22.2
		16QAM	1	0	1	22.2	22.2	22.5
			1	12	1	22.5	22.1	22.7
			1	24	1	22.2	22.5	22.4
			12	0	2	21.0	21.1	21.1
			12	7	2	21.1	21.1	21.3
			12	13	2	21.1	21.3	21.3
			25	0	2	21.4	21.1	21.3

This report shall not be reproduced except in full, without the written approval of UL Verification Services Inc.

Band	BW (MHz)	Mode	RB Allocation	RB offset	Target MPR	Avg Pwr (dBm)		
						19965	20175	20385
						1711.5 MHz	1732.5 MHz	1753.5 MHz
LTE Band 4	3	QPSK	1	0	0	23.1	23.1	23.0
			1	8	0	23.0	23.3	23.1
			1	14	0	23.1	23.3	22.9
			8	0	1	22.1	22.3	22.0
			8	4	1	22.2	22.2	22.1
			8	7	1	22.2	22.2	22.1
			15	0	1	22.2	22.2	22.2
		16QAM	1	0	1	22.7	22.6	22.4
			1	8	1	22.7	22.7	22.5
			1	14	1	22.7	22.7	22.2
			8	0	2	21.3	21.1	21.2
			8	4	2	21.0	20.9	21.2
			8	7	2	21.0	20.7	21.2
			15	0	2	21.2	21.2	21.1

Band	BW (MHz)	Mode	RB Allocation	RB offset	Target MPR	Avg Pwr (dBm)		
						19957	20175	20393
						1710.7 MHz	1732.5 MHz	1754.3 MHz
LTE Band 4	1.4	QPSK	1	0	0	23.1	23.1	22.8
			1	3	0	22.9	23.2	22.9
			1	5	0	23.0	23.2	22.9
			3	0	0	23.1	23.1	23.0
			3	1	0	23.2	23.1	23.0
			3	3	0	23.2	23.1	23.1
			6	0	1	22.2	22.2	22.2
		16QAM	1	0	1	22.7	22.7	22.3
			1	3	1	22.7	22.7	22.3
			1	5	1	22.7	22.6	22.2
			3	0	1	22.3	22.0	22.5
			3	1	1	22.2	22.1	22.5
			3	3	1	22.2	21.7	22.6
			6	0	2	20.9	21.0	21.2

This report shall not be reproduced except in full, without the written approval of UL Verification Services Inc.

LTE Band 5

Band	BW (MHz)	Mode	RB Allocation	RB offset	Target MPR	Avg Pwr (dBm)		
						20450	20525	20600
						829 MHz	836.5 MHz	844 MHz
LTE Band 5	10	QPSK	1	0	0	23.0	22.9	23.0
			1	25	0	23.0	23.1	23.0
			1	49	0	23.0	22.8	22.8
			25	0	1	22.0	22.0	22.1
			25	12	1	22.0	22.0	22.0
			25	25	1	22.0	22.0	22.0
			50	0	1	22.0	22.0	22.1
		16QAM	1	0	1	22.6	22.4	22.2
			1	25	1	22.6	22.3	22.2
			1	49	1	22.6	22.5	22.2
			25	0	2	21.0	21.0	21.0
			25	12	2	20.9	21.0	20.9
			25	25	2	20.9	21.0	21.0
			50	0	2	20.9	21.0	21.0

Band	BW (MHz)	Mode	RB Allocation	RB offset	Target MPR	Avg Pwr (dBm)		
						20425	20525	20625
						826.5 MHz	836.5 MHz	846.5 MHz
LTE Band 5	5	QPSK	1	0	0	22.8	23.0	23.1
			1	12	0	23.0	23.1	23.1
			1	24	0	22.9	23.0	23.1
			12	0	1	22.0	22.0	22.0
			12	7	1	22.0	21.9	22.0
			12	13	1	22.1	22.0	22.0
			25	0	1	22.0	22.0	22.1
		16QAM	1	0	1	21.6	22.0	22.7
			1	12	1	22.3	22.1	22.6
			1	24	1	22.1	22.0	22.3
			12	0	2	21.1	21.2	20.9
			12	7	2	21.0	21.0	21.1
			12	13	2	21.2	21.0	21.2
			25	0	2	20.9	20.9	21.1

This report shall not be reproduced except in full, without the written approval of UL Verification Services Inc.

Band	BW (MHz)	Mode	RB Allocation	RB offset	Target MPR	Avg Pwr (dBm)		
						20415	20525	20635
						825.5 MHz	836.5 MHz	847.5 MHz
LTE Band 5	3	QPSK	1	0	0	22.8	23.1	22.9
			1	8	0	23.0	23.1	23.0
			1	14	0	23.0	23.1	22.8
			8	0	1	22.0	22.0	22.1
			8	4	1	22.0	21.9	22.1
			8	7	1	22.1	22.1	22.1
			15	0	1	22.1	22.1	22.1
		16QAM	1	0	1	22.0	22.5	22.2
			1	8	1	22.0	22.2	22.3
			1	14	1	22.3	22.5	22.1
			8	0	2	21.1	21.1	21.2
			8	4	2	20.9	21.1	21.1
			8	7	2	20.8	20.9	21.0
			15	0	2	20.9	21.1	20.9

Band	BW (MHz)	Mode	RB Allocation	RB offset	Target MPR	Avg Pwr (dBm)		
						20407	20525	20643
						824.7 MHz	836.5 MHz	848.3 MHz
LTE Band 5	1.4	QPSK	1	0	0	23.1	23.0	22.9
			1	3	0	23.0	22.9	22.9
			1	5	0	22.9	23.0	22.8
			3	0	0	23.1	23.0	23.0
			3	1	0	23.0	22.9	23.0
			3	3	0	23.0	23.0	23.2
			6	0	1	22.1	22.0	22.1
		16QAM	1	0	1	22.7	22.5	22.2
			1	3	1	22.9	22.6	22.3
			1	5	1	22.8	22.5	22.2
			3	0	1	22.3	21.9	21.7
			3	1	1	22.2	21.9	21.8
			3	3	1	21.8	22.1	21.7
			6	0	2	20.8	20.9	20.9

This report shall not be reproduced except in full, without the written approval of UL Verification Services Inc.

LTE Band 12

Band	BW (MHz)	Mode	RB Allocation	RB offset	Target MPR	Avg Pwr (dBm)		
						23060	23095	23130
						704 MHz	707.5 MHz	711 MHz
LTE Band 12	10	QPSK	1	0	0	23.6	23.7	23.8
			1	25	0	23.6	23.7	23.5
			1	49	0	23.6	23.5	23.6
			25	0	1	22.8	22.8	22.8
			25	12	1	22.7	22.7	22.7
			25	25	1	22.8	22.7	22.9
			50	0	1	22.8	22.7	22.8
		16QAM	1	0	1	22.8	23.2	23.1
			1	25	1	23.0	23.2	22.6
			1	49	1	23.2	23.0	22.9
			25	0	2	21.7	21.9	21.9
			25	12	2	21.7	21.8	21.8
			25	25	2	21.9	21.7	22.1
			50	0	2	21.8	21.9	21.9

Band	BW (MHz)	Mode	RB Allocation	RB offset	Target MPR	Avg Pwr (dBm)		
						23035	23095	23155
						701.5 MHz	707.5 MHz	713.5 MHz
LTE Band 12	5	QPSK	1	0	0	23.5	23.7	23.7
			1	12	0	23.5	24.1	23.8
			1	24	0	23.5	23.7	23.8
			12	0	1	22.9	22.7	22.7
			12	7	1	22.7	22.8	22.9
			12	13	1	22.7	22.7	22.8
			25	0	1	22.9	22.7	22.8
		16QAM	1	0	1	22.9	23.0	23.0
			1	12	1	22.6	23.1	23.0
			1	24	1	23.0	23.1	23.0
			12	0	2	21.9	22.1	21.8
			12	7	2	21.6	22.0	21.9
			12	13	2	21.8	22.0	21.9
			25	0	2	22.0	21.6	21.9

This report shall not be reproduced except in full, without the written approval of UL Verification Services Inc.

Band	BW (MHz)	Mode	RB Allocation	RB offset	Target MPR	Avg Pwr (dBm)		
						23025	23095	23165
						700.5 MHz	707.5 MHz	714.5 MHz
LTE Band 12	3	QPSK	1	0	0	23.5	23.6	23.6
			1	8	0	23.6	23.7	23.7
			1	14	0	23.7	23.6	23.6
			8	0	1	22.9	22.8	22.8
			8	4	1	22.9	22.8	22.9
			8	7	1	22.9	22.8	22.8
			15	0	1	22.8	22.8	22.9
		16QAM	1	0	1	22.7	23.0	22.9
			1	8	1	23.0	23.0	23.0
			1	14	1	22.8	23.0	22.8
			8	0	2	22.2	21.5	22.1
			8	4	2	22.1	21.5	21.9
			8	7	2	21.8	21.8	22.0
			15	0	2	21.9	22.0	21.9

Band	BW (MHz)	Mode	RB Allocation	RB offset	Target MPR	Avg Pwr (dBm)		
						23017	23095	23173
						699.7 MHz	707.5 MHz	715.3 MHz
LTE Band 12	1.4	QPSK	1	0	0	23.6	23.6	23.5
			1	3	0	23.7	23.8	23.5
			1	5	0	23.8	23.5	23.6
			3	0	0	23.7	23.7	23.7
			3	1	0	23.7	23.6	23.6
			3	3	0	23.5	23.6	23.6
			6	0	1	22.9	22.9	22.8
		16QAM	1	0	1	23.0	23.0	22.7
			1	3	1	23.1	23.0	22.8
			1	5	1	23.0	23.0	23.0
			3	0	1	23.0	22.8	23.0
			3	1	1	22.9	22.9	23.2
			3	3	1	22.8	23.0	22.7
			6	0	2	21.6	21.6	21.9

This report shall not be reproduced except in full, without the written approval of UL Verification Services Inc.

LTE Band 25

Band	BW (MHz)	Mode	RB Allocation	RB offset	Target MPR	Avg Pwr (dBm)		
						26140	26365	26590
						1860 MHz	1882.5 MHz	1905 MHz
LTE Band 25	20	QPSK	1	0	0	23.3	23.3	23.2
			1	49	0	23.6	23.7	23.2
			1	99	0	23.3	23.1	23.2
			50	0	1	22.3	22.4	22.2
			50	24	1	22.2	22.3	22.0
			50	50	1	22.3	22.2	22.0
			100	0	1	22.4	22.2	22.2
		16QAM	1	0	1	22.3	22.3	22.7
			1	49	1	22.1	22.7	22.4
			1	99	1	22.3	22.0	22.4
			50	0	2	21.2	21.3	21.1
			50	24	2	21.1	21.3	20.9
			50	50	2	21.1	21.1	21.0
			100	0	2	21.3	21.2	21.1

Band	BW (MHz)	Mode	RB Allocation	RB offset	Target MPR	Avg Pwr (dBm)		
						26115	26365	26615
						1857.5 MHz	1882.5 MHz	1907.5 MHz
LTE Band 25	15	QPSK	1	0	0	23.6	23.4	23.1
			1	37	0	23.5	23.4	23.3
			1	74	0	23.1	23.0	22.9
			36	0	1	22.1	22.3	22.1
			36	20	1	22.1	22.3	21.9
			36	39	1	22.1	22.1	21.9
			75	0	1	22.1	22.2	22.0
		16QAM	1	0	1	22.7	22.2	22.7
			1	37	1	22.7	22.5	22.7
			1	74	1	22.7	21.9	22.7
			36	0	2	21.3	21.3	21.2
			36	20	2	21.2	21.2	20.8
			36	39	2	21.1	21.0	20.8
			75	0	2	21.0	21.1	21.1

This report shall not be reproduced except in full, without the written approval of UL Verification Services Inc.

Band	BW (MHz)	Mode	RB Allocation	RB offset	Target MPR	Avg Pwr (dBm)		
						26090	26365	26640
						1855 MHz	1882.5 MHz	1910 MHz
LTE Band 25	10	QPSK	1	0	0	23.3	23.2	22.9
			1	25	0	23.2	23.3	23.0
			1	49	0	23.0	23.1	22.9
			25	0	1	22.3	22.3	22.1
			25	12	1	22.2	22.2	22.1
			25	25	1	22.1	22.2	22.0
			50	0	1	22.1	22.3	22.0
		16QAM	1	0	1	22.6	22.5	22.3
			1	25	1	22.7	22.7	21.8
			1	49	1	22.7	22.7	22.2
			25	0	2	21.2	21.3	21.0
			25	12	2	21.1	21.2	21.2
			25	25	2	21.2	21.1	21.0
			50	0	2	21.0	21.1	21.0

Band	BW (MHz)	Mode	RB Allocation	RB offset	Target MPR	Avg Pwr (dBm)		
						26065	26365	26665
						1852.5 MHz	1882.5 MHz	1912.5 MHz
LTE Band 25	5	QPSK	1	0	0	23.0	22.9	23.1
			1	12	0	23.1	23.0	23.2
			1	24	0	22.9	23.0	23.1
			12	0	1	22.2	22.2	22.2
			12	7	1	22.2	22.2	22.0
			12	13	1	22.3	22.2	22.0
			25	0	1	22.3	22.2	22.0
		16QAM	1	0	1	22.5	22.3	22.5
			1	12	1	22.7	22.5	22.6
			1	24	1	22.2	21.9	22.7
			12	0	2	21.1	21.0	21.2
			12	7	2	21.1	21.2	21.1
			12	13	2	21.3	21.3	21.2
			25	0	2	21.1	21.3	21.1

This report shall not be reproduced except in full, without the written approval of UL Verification Services Inc.

Band	BW (MHz)	Mode	RB Allocation	RB offset	Target MPR	Avg Pwr (dBm)		
						26055	26365	26675
						1851.5 MHz	1882.5 MHz	1913.5 MHz
LTE Band 25	3	QPSK	1	0	0	23.1	23.1	23.0
			1	8	0	23.2	23.1	23.4
			1	14	0	23.1	23.1	23.0
			8	0	1	22.2	22.1	21.9
			8	4	1	22.2	22.3	21.9
			8	7	1	22.2	22.2	22.1
			15	0	1	22.2	22.2	22.0
		16QAM	1	0	1	22.2	22.7	22.2
			1	8	1	22.7	22.7	22.3
			1	14	1	22.7	22.7	22.2
			8	0	2	21.1	21.4	21.1
			8	4	2	21.0	21.3	21.2
			8	7	2	21.0	21.4	21.2
			15	0	2	21.0	21.2	21.0

Band	BW (MHz)	Mode	RB Allocation	RB offset	Target MPR	Avg Pwr (dBm)		
						26047	26365	26683
						1850.7 MHz	1882.5 MHz	1914.3 MHz
LTE Band 25	1.4	QPSK	1	0	0	23.2	23.1	22.8
			1	3	0	23.3	23.2	22.9
			1	5	0	23.1	23.0	22.8
			3	0	0	23.2	23.1	22.8
			3	1	0	23.3	23.2	23.0
			3	3	0	23.3	23.1	23.0
			6	0	1	22.2	22.0	21.9
		16QAM	1	0	1	22.6	22.6	22.1
			1	3	1	22.6	22.7	22.2
			1	5	1	22.6	22.7	22.0
			3	0	1	21.9	22.3	21.8
			3	1	1	22.0	22.3	22.0
			3	3	1	21.9	22.3	22.2
			6	0	2	20.9	21.2	21.2

This report shall not be reproduced except in full, without the written approval of UL Verification Services Inc.

LTE Band 26

Band	BW (MHz)	Mode	RB Allocation	RB offset	Target MPR	Avg Pwr (dBm)		
						26765	26865	26965
						831.5 MHz	836.5 MHz	841.5 MHz
LTE Band 26	15	QPSK	1	0	0	23.3	23.3	23.0
			1	37	0	23.3	23.5	23.0
			1	74	0	23.1	23.1	22.8
			36	0	1	22.4	22.3	22.3
			36	20	1	22.4	22.2	22.1
			36	39	1	22.2	22.2	22.2
			75	0	1	22.3	22.2	22.2
		16QAM	1	0	1	22.2	22.5	23.1
			1	37	1	22.6	22.5	23.2
			1	74	1	22.2	22.2	22.7
			36	0	2	21.4	21.4	21.3
			36	20	2	21.2	21.3	21.2
			36	39	2	21.1	21.2	21.1
			75	0	2	21.2	21.2	21.2

Band	BW (MHz)	Mode	RB Allocation	RB offset	Target MPR	Avg Pwr (dBm)		
						26740	26865	26990
						819 MHz	831.5 MHz	844 MHz
LTE Band 26	10	QPSK	1	0	0	23.3	23.3	23.1
			1	25	0	23.3	23.1	23.0
			1	49	0	23.2	23.2	23.1
			25	0	1	22.3	22.4	22.2
			25	12	1	22.4	22.2	22.2
			25	25	1	22.3	22.2	22.2
			50	0	1	22.3	22.3	22.2
		16QAM	1	0	1	23.1	22.8	22.2
			1	25	1	23.1	22.4	22.4
			1	49	1	22.4	22.7	22.5
			25	0	2	21.3	21.4	21.2
			25	12	2	21.3	21.2	21.2
			25	25	2	21.3	21.2	21.2
			50	0	2	21.3	21.4	21.2

This report shall not be reproduced except in full, without the written approval of UL Verification Services Inc.

Band	BW (MHz)	Mode	RB Allocation	RB offset	Target MPR	Avg Pwr (dBm)		
						26715	26865	27015
						816.5 MHz	831.5 MHz	846.5 MHz
LTE Band 26	5	QPSK	1	0	0	22.9	23.2	23.1
			1	12	0	23.0	23.6	23.2
			1	24	0	23.0	23.2	23.0
			12	0	1	22.2	22.1	22.3
			12	7	1	22.2	22.2	22.2
			12	13	1	22.4	22.2	22.2
			25	0	1	22.3	22.1	22.2
		16QAM	1	0	1	22.2	22.3	22.6
			1	12	1	22.5	22.2	22.6
			1	24	1	22.4	22.0	22.5
			12	0	2	21.1	21.2	21.3
			12	7	2	21.2	21.1	21.3
			12	13	2	21.3	21.0	21.2
			25	0	2	21.4	21.1	21.3

Band	BW (MHz)	Mode	RB Allocation	RB offset	Target MPR	Avg Pwr (dBm)		
						26705	26865	27025
						815.5 MHz	831.5 MHz	847.5 MHz
LTE Band 26	3	QPSK	1	0	0	23.0	22.9	23.0
			1	8	0	23.0	23.0	23.0
			1	14	0	23.0	23.0	23.0
			8	0	1	22.2	22.2	22.2
			8	4	1	22.3	22.1	22.1
			8	7	1	22.2	22.2	22.1
			15	0	1	22.2	22.2	22.2
		16QAM	1	0	1	22.9	22.6	22.4
			1	8	1	22.9	22.2	22.4
			1	14	1	23.0	22.2	22.2
			8	0	2	21.4	21.2	21.3
			8	4	2	21.5	21.2	21.2
			8	7	2	21.1	20.7	21.1
			15	0	2	21.2	21.3	21.1

This report shall not be reproduced except in full, without the written approval of UL Verification Services Inc.

Band	BW (MHz)	Mode	RB Allocation	RB offset	Target MPR	Avg Pwr (dBm)		
						26697	26865	27033
						814.7 MHz	831.5 MHz	848.3 MHz
LTE Band 26	1.4	QPSK	1	0	0	23.1	22.9	23.0
			1	3	0	23.2	22.9	23.1
			1	5	0	23.1	23.0	23.0
			3	0	0	23.2	23.0	23.2
			3	1	0	23.1	23.2	23.2
			3	3	0	23.1	23.2	23.2
			6	0	1	22.2	22.2	22.4
		16QAM	1	0	1	22.9	22.6	22.2
			1	3	1	23.0	22.7	22.4
			1	5	1	22.9	22.6	22.3
			3	0	1	22.3	22.1	22.5
			3	1	1	22.2	22.1	22.5
			3	3	1	22.2	22.2	22.4
			6	0	2	21.1	21.2	21.4

This report shall not be reproduced except in full, without the written approval of UL Verification Services Inc.

LTE Band 41

Band	BW (MHz)	Mode	RB Allocation	RB offset	Target MPR	Avg Pwr (dBm)		
						39750	40620	41490
						2506 MHz	2593 MHz	2680 MHz
LTE Band 41	20	QPSK	1	0	0	23.6	23.7	23.8
			1	49	0	23.6	23.7	23.1
			1	99	0	23.2	23.2	23.1
			50	0	1	22.5	22.6	22.3
			50	25	1	22.5	22.6	22.3
			50	49	1	22.5	22.5	22.2
			100	0	1	22.4	22.6	22.3
		16QAM	1	0	1	22.2	22.2	22.9
			1	49	1	22.2	22.2	22.8
			1	99	1	22.2	22.2	22.7
			50	0	2	21.5	21.7	21.3
			50	25	2	21.6	21.5	21.4
			50	49	2	21.5	21.4	21.2
			100	0	2	21.4	21.4	21.3

Band	BW (MHz)	Mode	RB Allocation	RB offset	Target MPR	Avg Pwr (dBm)		
						39725	40620	41515
						2503.5 MHz	2593 MHz	2682.5 MHz
LTE Band 41	15	QPSK	1	0	0	23.5	23.6	23.3
			1	37	0	23.5	23.5	23.5
			1	74	0	23.5	23.4	23.0
			36	0	1	22.4	22.5	22.4
			36	18	1	22.5	22.5	22.3
			36	35	1	22.5	22.4	22.3
			75	0	1	22.4	22.4	22.3
		16QAM	1	0	1	22.7	22.5	22.9
			1	37	1	22.7	22.3	22.9
			1	74	1	22.7	22.2	22.8
			36	0	2	21.2	21.5	21.4
			36	18	2	21.3	21.6	21.3
			36	35	2	21.3	21.5	21.2
			75	0	2	21.4	21.6	21.3

This report shall not be reproduced except in full, without the written approval of UL Verification Services Inc.

Band	BW (MHz)	Mode	RB Allocation	RB offset	Target MPR	Avg Pwr (dBm)		
						39700	40620	41540
						2501 MHz	2593 MHz	2685 MHz
LTE Band 41	10	QPSK	1	0	0	23.2	23.4	23.3
			1	24	0	23.2	23.3	23.2
			1	49	0	23.3	23.3	23.2
			25	0	1	22.3	22.4	22.3
			25	12	1	22.2	22.5	22.2
			25	24	1	22.3	22.4	22.1
			50	0	1	22.2	22.5	22.2
		16QAM	1	0	1	22.8	22.2	22.2
			1	24	1	22.9	22.1	22.9
			1	49	1	22.2	22.1	22.8
			25	0	2	21.4	21.3	21.4
			25	12	2	21.4	21.3	21.3
			25	24	2	21.3	21.4	21.0
			50	0	2	21.2	21.6	21.3

Band	BW (MHz)	Mode	RB Allocation	RB offset	Target MPR	Avg Pwr (dBm)		
						39675	40620	41565
						2498.5 MHz	2593 MHz	2687.5 MHz
LTE Band 41	5	QPSK	1	0	0	23.2	23.3	23.2
			1	12	0	23.4	23.8	23.4
			1	24	0	23.2	23.3	23.1
			12	0	1	22.3	22.4	22.2
			12	6	1	22.3	22.4	22.2
			12	11	1	22.3	22.4	22.1
			25	0	1	22.2	22.5	22.2
		16QAM	1	0	1	22.8	22.3	22.0
			1	12	1	22.0	22.6	22.0
			1	24	1	22.8	22.3	22.0
			12	0	2	21.4	21.4	21.5
			12	6	2	21.4	21.6	21.5
			12	11	2	21.5	21.5	21.4
			25	0	2	21.2	21.5	21.5

This report shall not be reproduced except in full, without the written approval of UL Verification Services Inc.

9. RADIATED TEST RESULTS

9.1. RADIATED POWER (ERP & EIRP)

RULE PART(S)

FCC: §2.1046, §22.913, §24.232, §27 and § 90.635.

LIMITS

22.913(a) - The ERP of mobile transmitters and auxiliary test transmitters must not exceed 7 Watts.

24.232(c) - Mobile/portable stations are limited to 2 watts e.i.r.p. peak power and the equipment must employ means to limit the power to the minimum necessary for successful communications.

27.50(b) - (10) Portable stations (hand-held devices) transmitting in the 746-757 MHz, 776-788 MHz, and 805-806 MHz bands are limited to 3 watts ERP. (LTE B12)

27.50(c) - (10) Portable stations (hand-held devices) are limited to 3 watts ERP; (LTE B17)

27.50(d) - (4) Fixed, mobile, and portable (hand-held) stations operating in the 1710-1755 MHz band and mobile and portable stations operating in the 1695-1710 MHz and 1755-1780 MHz bands are limited to 1 watt EIRP.(Band 4)

27.50(h) - (2) Mobile stations are limited to 2.0 watts EIRP. All user stations are limited to 2.0 watts transmitter output power.(LTE B41 & 7)

90.635(b) - The maximum output power of the transmitter for mobile stations is 100 watts (20 dBw). (LTE B26)

In addition, when the transmitter power is measured in terms of average value, the peak-to-average ratio of the power shall not exceed 13dB.

TEST PROCEDURE

ANSI / TIA / EIA 603C Clause 2.2.17; PSA setting reference to 971168 D01 v02r02

For peak power measurement with a PSA:

a) Set the RBW ≥ OBW; b) Set VBW ≥ 3 × RBW; c) Set span ≥ 2 x RBW; d) Sweep time = auto couple; e) Detector = peak; f) Ensure that the number of measurement points ≥ span/RBW; g) Trace mode = max hold;

For average power measurement with a PSA:

a) Set span to at least 1.5 times the OBW; b) Set RBW = 1-5% of the OBW, not to exceed 1 MHz; c) Set VBW ≥ 3 x RBW; d) Set number of points in sweep ≥ 2 × span / RBW; e) Sweep time = auto-couple; f) Detector = RMS (power averaging); g) Use free run trigger If burst duty cycle ≥ 98; h) Use trigger to capture bursts If burst duty cycle < 98; i) Trace average at least 100 traces in power averaging (*i.e.*, RMS) mode. j) Compute the power by integrating the spectrum across the OBW of the signal using the instrument's band power measurement function.

MODES TESTED

CDMA and LTE

TEST RESULTS

This report shall not be reproduced except in full, without the written approval of UL Verification Services Inc.

9.1.1. ERP/EIRP Results

CDMA

Band	Mode	Channel	f(MHz)	ERP / EIRP	
				dBm	mW
BC1	1xRTT	25	1851.25	25.85	384.59
		600	1880	26.65	462.38
		1175	1908.75	26.79	477.53
	EVDO REL. 0	25	1851.25	26.05	402.72
		600	1880	26.85	484.17
		1175	1908.75	27.15	518.80

Band	Mode	Channel	f(MHz)	ERP / EIRP	
				dBm	mW
BC0	1xRTT	1013	824.7	23.101	204.22
		384	836.52	22.841	192.35
		777	848.31	23.501	223.92
	EVDO REL. 0	1013	824.7	23.09	203.70
		384	836.52	22.74	187.93
		777	848.31	23.30	213.80

Band	Mode	Channel	f(MHz)	ERP / EIRP	
				dBm	mW
BC10	1xRTT	476	817.9	22.621	182.85
		580	820.5	22.701	186.25
		684	823.1	22.741	187.97
	EVDO REL. 0	476	817.9	22.01	158.85
		580	820.5	22.44	175.39
		684	823.1	22.60	181.97

This report shall not be reproduced except in full, without the written approval of UL Verification Services Inc.

9.1.2. LTE ERP/EIRP RESULTS

LTE Band 2

Band	BW (MHz)	Mode	RB/RB Size	f (MHz)	ERP / EIRP	
					dBm	mW
LTE2	20	QPSK	1/0	1860	24.4	275.42
			1/0	1880	25.18	329.61
			1/0	1900	25.9	389.05
		16QAM	1/0	1860	23.86	243.22
			1/0	1880	24.2	263.03
			1/0	1900	25.24	334.2
	15	QPSK	1/0	1857.5	24.17	261.22
			1/0	1880	26.5	446.68
			1/0	1902.5	26.1	407.38
		16QAM	1/0	1857.5	23.4	218.78
			1/0	1880	26	398.11
			1/0	1902.5	25.73	374.11
	10	QPSK	1/0	1855	24	251.19
			1/0	1880	26	398.11
			1/0	1905	25.2	331.13
		16QAM	1/0	1855	23.6	229.09
			1/0	1880	25.4	346.74
			1/0	1905	24.7	295.12
	5	QPSK	1/0	1852.5	23	199.53
			1/0	1880	25.8	380.19
			1/0	1907.5	24.84	304.79
		16QAM	1/0	1852.5	22.3	169.82
			1/0	1880	25.2	331.13
			1/0	1907.5	24.4	275.42

This report shall not be reproduced except in full, without the written approval of UL Verification Services Inc.

Band	BW (MHz)	Mode	RB/RB Size	f (MHz)	ERP / EIRP	
					dBm	mW
LTE2	3	QPSK	1/0	1851.5	22.5	177.83
			1/0	1880	26	398.11
			1/0	1908.5	25.7	371.54
		16QAM	1/0	1851.5	21.5	141.25
			1/0	1880	25.5	354.81
			1/0	1908.5	25.3	338.84
	1.4	QPSK	1/0	1850.7	24.135	259.12
			1/0	1880	26	398.11
			1/0	1909.3	25.466	352.05
		16QAM	1/0	1850.7	23.03	200.91
			1/0	1880	25.6	363.08
			1/0	1909.3	25	316.23

This report shall not be reproduced except in full, without the written approval of UL Verification Services Inc.

LTE Band 4

Band	BW (MHz)	Mode	RB/RB Size	f (MHz)	ERP / EIRP	
					dBm	mW
LTE4	20	QPSK	1/0	1720	21.8168	151.94
			1/0	1732.5	21.37105	137.12
			1/0	1745	22.1253	163.13
		16QAM	1/0	1720	20.8168	120.69
			1/0	1732.5	20.27105	106.44
			1/0	1745	20.9253	123.75
	15	QPSK	1/0	1717.5	22.24595	167.72
			1/0	1732.5	21.96105	157.07
			1/0	1747.5	22.18615	165.43
		16QAM	1/0	1717.5	21.70595	148.11
			1/0	1732.5	21.27105	134
			1/0	1747.5	21.83615	152.62
	10	QPSK	1/0	1715	22.1251	163.12
			1/0	1732.5	21.89105	154.56
			1/0	1750	22.107	162.44
		16QAM	1/0	1715	21.3551	136.62
			1/0	1732.5	21.12105	129.45
			1/0	1750	21.337	136.05
	5	QPSK	1/0	1712.5	21.94425	156.47
			1/0	1732.5	21.74105	149.32
			1/0	1752.5	22.19785	165.88
		16QAM	1/0	1712.5	21.14425	130.14
			1/0	1732.5	20.93105	123.91
			1/0	1752.5	21.23785	132.98

This report shall not be reproduced except in full, without the written approval of UL Verification Services Inc.

Band	BW (MHz)	Mode	RB/RB Size	f (MHz)	ERP / EIRP	
					dBm	mW
LTE4	3	QPSK	1/0	1711.5	22.34791	171.71
			1/0	1732.5	21.94105	156.35
			1/0	1753.5	22.19419	165.74
		16QAM	1/0	1711.5	22.14791	163.98
			1/0	1732.5	21.67105	146.93
			1/0	1753.5	21.89419	154.67
	1.4	QPSK	1/0	1710.7	22.210838	166.37
			1/0	1732.5	21.87105	153.85
			1/0	1754.3	22.091262	161.86
		16QAM	1/0	1710.7	21.900838	154.91
			1/0	1732.5	21.47105	140.32
			1/0	1754.3	21.591262	144.25

This report shall not be reproduced except in full, without the written approval of UL Verification Services Inc.

LTE Band 5

Band	BW (MHz)	Mode	RB/RB Size	f (MHz)	ERP / EIRP	
					dBm	mW
LTE5	10	QPSK	1/0	829	21.7	147.91
			1/0	836.5	21.68	147.23
			1/0	844	21.8	151.36
		16QAM	1/0	829	20.9	123.03
			1/0	836.5	21.04	127.06
			1/0	844	21.2	131.83
	5	QPSK	1/0	826.5	21.3	134.9
			1/0	836.5	21.44	139.32
			1/0	846.5	21.94	156.31
		16QAM	1/0	826.5	20.4	109.65
			1/0	836.5	20.44	110.66
			1/0	846.5	20.94	124.17
	3	QPSK	1/0	825.5	21.4	138.04
			1/0	836.5	21.81	151.71
			1/0	847.5	22.348	171.71
		16QAM	1/0	825.5	21	125.89
			1/0	836.5	21.34	136.14
			1/0	847.5	21.93	155.96
	1.4	QPSK	1/0	824.7	21.2	131.83
			1/0	836.5	21.44	139.32
			1/0	848.3	21.8	151.36
		16QAM	1/0	824.7	21	125.89
			1/0	836.5	21.34	136.14
			1/0	848.3	21.4	138.04

This report shall not be reproduced except in full, without the written approval of UL Verification Services Inc.

LTE Band 12

Band	BW (MHz)	Mode	RB/RB Size	f (MHz)	ERP / EIRP	
					dBm	mW
LTE12	10	QPSK	1/0	704	18.40	69.18
			1/0	707.5	19.10	81.28
			1/0	711	19.70	93.33
		16QAM	1/0	704	17.90	61.66
			1/0	707.5	18.10	64.57
			1/0	711	18.90	77.62
	5	QPSK	1/0	701.5	18.40	69.18
			1/0	707.5	19.10	81.28
			1/0	713.5	19.40	87.10
		16QAM	1/0	701.5	17.40	54.95
			1/0	707.5	18.00	63.10
			1/0	713.5	18.50	70.79
	3	QPSK	1/0	700.5	18.62	72.78
			1/0	707.5	19.40	87.10
			1/0	714.5	19.70	93.33
		16QAM	1/0	700.5	18.10	64.57
			1/0	707.5	18.60	72.44
			1/0	714.5	19.40	87.10
	1.4	QPSK	1/0	699.7	18.10	64.57
			1/0	707.5	19.06	80.54
			1/0	715.3	19.56	90.36
		16QAM	1/0	699.7	17.80	60.26
			1/0	707.5	18.45	69.98
			1/0	715.3	19.23	83.75

This report shall not be reproduced except in full, without the written approval of UL Verification Services Inc.

LTE Band 25

Band	BW (MHz)	Mode	RB/RB Size	f (MHz)	ERP / EIRP	
					dBm	mW
LTE25	20	QPSK	1/0	1860	24.4	275.42
			1/0	1882.5	25.18	329.61
			1/0	1905	25.9	389.05
		16QAM	1/0	1860	23.86	243.22
			1/0	1882.5	24.2	263.03
			1/0	1905	25.24	334.2
	15	QPSK	1/0	1857.5	24.17	261.22
			1/0	1882.5	26.5	446.68
			1/0	1907.5	26.1	407.38
		16QAM	1/0	1857.5	23.4	218.78
			1/0	1882.5	26	398.11
			1/0	1907.5	25.73	374.11
	10	QPSK	1/0	1855	24	251.19
			1/0	1882.5	26	398.11
			1/0	1910	25.2	331.13
		16QAM	1/0	1855	23.6	229.09
			1/0	1882.5	25.4	346.74
			1/0	1910	24.7	295.12
	5	QPSK	1/0	1852.5	23	199.53
			1/0	1882.5	25.8	380.19
			1/0	1912.5	24.84	304.79
		16QAM	1/0	1852.5	22.3	169.82
			1/0	1882.5	25.2	331.13
			1/0	1912.5	24.4	275.42

This report shall not be reproduced except in full, without the written approval of UL Verification Services Inc.

Band	BW (MHz)	Mode	RB/RB Size	f (MHz)	ERP / EIRP	
					dBm	mW
LTE25	3	QPSK	1/0	1851.5	22.5	177.83
			1/0	1882.5	26	398.11
			1/0	1913.5	25.7	371.54
		16QAM	1/0	1851.5	21.5	141.25
			1/0	1882.5	25.5	354.81
			1/0	1913.5	25.3	338.84
	1.4	QPSK	1/0	1850.7	24.135	259.12
			1/0	1882.5	26	398.11
			1/0	1914.3	25.466	352.05
		16QAM	1/0	1850.7	23.03	200.91
			1/0	1882.5	25.6	363.08
			1/0	1914.3	25	316.23

This report shall not be reproduced except in full, without the written approval of UL Verification Services Inc.

LTE Band 26

Band	BW (MHz)	Mode	RB/RB Size	f (MHz)	ERP / EIRP	
					dBm	mW
LTE26	15	QPSK	1/0	831.5	21.7	147.91
			1/0	836.5	21.94	156.31
			1/0	841.5	21.67	146.89
		16QAM	1/0	831.5	21.2	131.83
			1/0	836.5	21.54	142.56
			1/0	841.5	21.28	134.28
	10	QPSK	1/0	819	21.7	147.91
			1/0	831.5	21.68	147.23
			1/0	844	21.8	151.36
		16QAM	1/0	819	20.9	123.03
			1/0	831.5	21.04	127.06
			1/0	844	21.2	131.83
	5	QPSK	1/0	816.5	21.3	134.9
			1/0	831.5	21.44	139.32
			1/0	846.5	21.94	156.31
		16QAM	1/0	816.5	20.4	109.65
			1/0	831.5	20.44	110.66
			1/0	846.5	20.94	124.17

This report shall not be reproduced except in full, without the written approval of UL Verification Services Inc.

Band	BW (MHz)	Mode	RB/RB Size	f (MHz)	ERP / EIRP	
					dBm	mW
LTE26	3	QPSK	1/0	815.5	21.4	138.04
			1/0	831.5	21.81	151.71
			1/0	847.5	22.348	171.71
		16QAM	1/0	815.5	21	125.89
			1/0	831.5	21.34	136.14
			1/0	847.5	21.93	155.96
	1.4	QPSK	1/0	814.7	21.2	131.83
			1/0	831.5	21.44	139.32
			1/0	848.3	21.8	151.36
		16QAM	1/0	814.7	21	125.89
			1/0	831.5	21.34	136.14
			1/0	848.3	21.4	138.04

This report shall not be reproduced except in full, without the written approval of UL Verification Services Inc.

LTE Band 41

Band	BW (MHz)	Mode	RB/RB Size	f (MHz)	ERP / EIRP	
					dBm	mW
LTE41	20	QPSK	1/0	2506	24.3798	274.14
			1/0	2593	25.6059	363.57
			1/0	2680	24.6256	290.11
		16QAM	1/0	2506	23.8798	244.33
			1/0	2593	25.1059	324.03
			1/0	2680	24.2256	264.58
	15	QPSK	1/0	2503.5	24.27905	267.86
			1/0	2593	25.5059	355.3
			1/0	2682.5	23.8324	241.68
		16QAM	1/0	2503.5	23.87905	244.29
			1/0	2593	25.0059	316.66
			1/0	2682.5	23.4324	220.41
	10	QPSK	1/0	2501	24.5183	283.03
			1/0	2593	25.7959	379.83
			1/0	2685	24.9992	316.17
		16QAM	1/0	2501	24.2783	267.81
			1/0	2593	25.6959	371.18
			1/0	2685	24.2992	269.1
	5	QPSK	1/0	2498.5	24.473755	280.14
			1/0	2593	25.4059	347.21
			1/0	2687.5	24.046	253.86
		16QAM	1/0	2498.5	23.973755	249.68
			1/0	2593	24.7059	295.52
			1/0	2687.5	23.446	221.11

This report shall not be reproduced except in full, without the written approval of UL Verification Services Inc.

9.1.3. ERP/EIRP PLOTS

CDMA

Band

BC1

High Frequency Substitution Measurement
UL Verification Services Chamber F

Company: LG
Project #: 15I20527
Date: 4/28/2015
Test Engineer: K.Kedida
Configuration: EUT Only
Mode: CDMA EVDO BC1

Test Equipment:
Receiving: Horn T122, and Chamber F SMA Cables
Substitution: Horn T59 Substitution, 6ft SMA Cable

f GHz	SG reading (dBm)	Ant. Pol. (H/V)	Cable Loss (dB)	Antenna Gain (dBi)	EIRP (dBm)	Limit (dBm)	Delta (dB)	Notes
Low Ch								
1.8513	17.2	V	0.85	9.20	25.55	33.0	-7.5	
1.8513	17.7	H	0.85	9.20	26.05	33.0	-7.0	
Mid Ch								
1.8800	18.2	V	0.85	9.20	26.55	33.0	-6.5	
1.8800	18.5	H	0.85	9.20	26.85	33.0	-6.2	
High Ch								
1.9088	18.9	V	0.85	9.10	27.15	33.0	-5.9	
1.9088	18.6	H	0.85	9.10	26.85	33.0	-6.2	

Rev. 3.17.11

This report shall not be reproduced except in full, without the written approval of UL Verification Services Inc.

Band

BC1

1xRTT

High Frequency Substitution Measurement
UL Verification Services Chamber F

Company: LG
Project #: 15I20527
Date: 4/28/2015
Test Engineer: K.Kedida
Configuration: EUT Only
Mode: CDMA RTT BC1

Test Equipment:
Receiving: Horn T120, and Chamber F SMA Cables
Substitution: Horn T59 Substitution, 6ft SMA Cable

f GHz	SG reading (dBm)	Ant. Pol. (H/V)	Cable Loss (dB)	Antenna Gain (dBi)	EIRP (dBm)	Limit (dBm)	Delta (dB)	Notes
Low Ch								
1.8513	17.0	V	0.85	9.20	25.37	33.0	-7.6	
1.8513	17.5	H	0.85	9.20	25.85	33.0	-7.2	
Mid Ch								
1.8800	18.0	V	0.85	9.20	26.30	33.0	-6.7	
1.8800	18.3	H	0.85	9.20	26.65	33.0	-6.4	
High Ch								
1.9088	18.0	V	0.85	9.10	26.25	33.0	-6.8	
1.9088	18.5	H	0.85	9.10	26.79	33.0	-6.2	

Rev. 3.17.11

This report shall not be reproduced except in full, without the written approval of UL Verification Services Inc.

Band

BC0

High Frequency Substitution Measurement
UL Verification Services Chamber F

Company: LG
Project #: 15I20527
Date: 4/28/2015
Test Engineer: K.Kedida
Configuration: EUT Only
Mode: CDMA EVDO BC0

Test Equipment:
Receiving: T122, and Chamber F Cable
Substitution: Dipole T273, 6ft SMA Cable

f MHz	SG reading (dBm)	Ant. Pol. (H/V)	Cable Loss (dB)	Antenna Gain (dBd)	ERP (dBm)	Limit (dBm)	Margin (dB)	Notes
Low Ch								
824.70	18.60	V	0.9	0.0	17.70	38.5	-20.7	
824.70	23.99	H	0.9	0.0	23.09	38.5	-15.4	
Mid Ch								
836.52	17.30	V	0.9	0.0	16.40	38.5	-22.0	
836.52	23.64	H	0.9	0.0	22.74	38.5	-15.7	
High Ch								
848.31	17.86	V	0.9	0.0	16.96	38.5	-21.5	
848.31	24.20	H	0.9	0.0	23.30	38.5	-15.1	

Rev. 3.17.11

This report shall not be reproduced except in full, without the written approval of UL Verification Services Inc.

Band

BC0

1xRTT

High Frequency Substitution Measurement
UL Verification Services Chamber F

Company: LG
Project #: 15I20527
Date: 4/28/2015
Test Engineer: K.Kedida
Configuration: EUT Only
Mode: CDMA RTT BC0

Test Equipment:
Receiving: T122, and Chamber G Cable
Substitution: Dipole T273, 6ft SMA Cable

f MHz	SG reading (dBm)	Ant. Pol. (H/V)	Cable Loss (dB)	Antenna Gain (dBd)	ERP (dBm)	Limit (dBm)	Margin (dB)	Notes
Low Ch								
824.70	19.10	V	0.9	0.0	18.20	38.5	-20.2	
824.70	24.00	H	0.9	0.0	23.10	38.5	-15.3	
Mid Ch								
836.52	17.96	V	0.9	0.0	17.06	38.5	-21.4	
836.52	23.74	H	0.9	0.0	22.84	38.5	-15.6	
High Ch								
848.31	17.55	V	0.9	0.0	16.65	38.5	-21.8	
848.31	24.40	H	0.9	0.0	23.50	38.5	-14.9	

Rev. 3.17.11

This report shall not be reproduced except in full, without the written approval of UL Verification Services Inc.

Band

BC10

High Frequency Substitution Measurement
UL Verification Services Chamber F

Company: LG
Project #: 15I20527
Date: 4/28/2015
Test Engineer: K.Kedida
Configuration: EUT Only
Mode: CDMA EVDO BC10

Test Equipment:
Receiving: T122, and Chamber F Cable
Substitution: Dipole T273, 6ft SMA Cable

f MHz	SG reading (dBm)	Ant. Pol. (H/V)	Cable Loss (dB)	Antenna Gain (dBd)	ERP (dBm)	Limit (dBm)	Margin (dB)	Notes
Low Ch								
817.90	18.20	V	0.9	0.0	17.30	38.5	-21.1	
817.90	22.91	H	0.9	0.0	22.01	38.5	-16.4	
Mid Ch								
820.50	17.10	V	0.9	0.0	16.20	38.5	-22.2	
820.50	23.34	H	0.9	0.0	22.44	38.5	-16.0	
High Ch								
823.10	17.72	V	0.9	0.0	16.82	38.5	-21.6	
823.10	23.50	H	0.9	0.0	22.60	38.5	-15.8	

Rev. 3.17.11

This report shall not be reproduced except in full, without the written approval of UL Verification Services Inc.

Band

BC10

1xRTT

High Frequency Substitution Measurement
UL Verification Services Chamber F

Company: LG
Project #: 15I20527
Date: 4/28/2015
Test Engineer: K.Kedida
Configuration: EUT Only
Mode: CDMA RTT BC10

Test Equipment:
Receiving: T122, and Chamber F Cable
Substitution: Dipole T273, 6ft SMA Cable

f MHz	SG reading (dBm)	Ant. Pol. (H/V)	Cable Loss (dB)	Antenna Gain (dBd)	ERP (dBm)	Limit (dBm)	Margin (dB)	Notes
Low Ch								
817.90	18.40	V	0.9	0.0	17.50	38.5	-20.9	
817.90	23.52	H	0.9	0.0	22.62	38.5	-15.8	
Mid Ch								
820.50	17.40	V	0.9	0.0	16.50	38.5	-21.9	
820.50	23.60	H	0.9	0.0	22.70	38.5	-15.7	
High Ch								
823.10	18.02	V	0.9	0.0	17.12	38.5	-21.3	
823.10	23.64	H	0.9	0.0	22.74	38.5	-15.7	

Rev. 3.17.11

This report shall not be reproduced except in full, without the written approval of UL Verification Services Inc.

LTE Band 2

Band

LTE2

20MHz

16QAM

High Frequency Substitution Measurement
UL Verification Services, Inc.

Company: LG
Project #: 15I20527
Date: 4/23/2015
Test Engineer: R.Z
Configuration: EUT Only
Location: Chamber G
Mode: LTE_16QAM Band 2 Fundamentals, 20MHz Bandwidth

Test Equpment:
Receiving: Horn T711, and Chamber G SMA Cables
Substitution: Horn T59, 6ft SMA Cable

f MHz	SG reading (dBm)	Ant. Pol. (H/V)	Cable Loss (dB)	Antenna Gain (dBi)	EIRP (dBm)	Limit (dBm)	Delta (dB)	Notes
Low Ch								
1860.00	14.90	V	0.9	9.2	23.20	33.0	-9.8	
1860.00	15.56	H	0.9	9.2	23.86	33.0	-9.1	
Mid Ch								
1880.00	15.16	V	0.9	9.2	23.46	33.0	-9.5	
1880.00	15.90	H	0.9	9.2	24.20	33.0	-8.8	
High Ch								
1900.00	14.08	V	0.9	9.1	22.28	33.0	-10.7	
1900.00	17.04	H	0.9	9.1	25.24	33.0	-7.8	

This report shall not be reproduced except in full, without the written approval of UL Verification Services Inc.

Band

LTE2

20MHz

QPSK

High Frequency Substitution Measurement
UL Verification Services, Inc.

Company: LG
Project #: 15I20527
Date: 4/23/2015
Test Engineer: R.Z
Configuration: EUT Only
Location: Chamber G
Mode: LTE_QPSK Band 2 Fundamentals, 20MHz Bandwidth

Test Equpment:
Receiving: Horn T711, and Chamber G SMA Cables
Substitution: Horn T59, 6ft SMA Cable

f MHz	SG reading (dBm)	Ant. Pol. (H/V)	Cable Loss (dB)	Antenna Gain (dBi)	EIRP (dBm)	Limit (dBm)	Delta (dB)	Notes
Low Ch								
1860.00	15.60	V	0.9	9.2	23.90	33.0	-9.1	
1860.00	16.10	H	0.9	9.2	24.40	33.0	-8.6	
Mid Ch								
1880.00	15.72	V	0.9	9.2	24.02	33.0	-9.0	
1880.00	16.88	H	0.9	9.2	25.18	33.0	-7.8	
High Ch								
1900.00	15.18	V	0.9	9.1	23.38	33.0	-9.6	
1900.00	17.70	H	0.9	9.1	25.90	33.0	-7.1	

This report shall not be reproduced except in full, without the written approval of UL Verification Services Inc.

Band

LTE2

15MHz

16QAM

High Frequency Substitution Measurement
UL Verification Services, Inc.

Company: LG
Project #: 15I20527
Date: 4/22/2015
Test Engineer: R.Z
Configuration: EUT Only
Location: Chamber G
Mode: LTE_16QAM Band 2 Fundamentals, 15MHz Bandwidth

Test Equpment:
Receiving: Horn T711, and Chamber G SMA Cables
Substitution: Horn T59, 6ft SMA Cable

f MHz	SG reading (dBm)	Ant. Pol. (H/V)	Cable Loss (dB)	Antenna Gain (dBi)	EIRP (dBm)	Limit (dBm)	Delta (dB)	Notes
Low Ch								
1857.50	12.90	V	0.9	9.2	21.20	33.0	-11.8	
1857.50	15.10	H	0.9	9.2	23.40	33.0	-9.6	
Mid Ch								
1880.00	15.58	V	0.9	9.2	23.88	33.0	-9.1	
1880.00	17.70	H	0.9	9.2	26.00	33.0	-7.0	
High Ch								
1902.50	15.40	V	0.9	9.1	23.60	33.0	-9.4	
1902.50	17.53	H	0.9	9.1	25.73	33.0	-7.3	

This report shall not be reproduced except in full, without the written approval of UL Verification Services Inc.

Band

LTE2

15MHz

QPSK

High Frequency Substitution Measurement
UL Verification Services, Inc.

Company: LG
Project #: 15I20527
Date: 4/22/2015
Test Engineer: R.Z
Configuration: EUT Only
Location: Chamber G
Mode: LTE_QPSK Band 2 Fundamentals, 15MHz Bandwidth

Test Equpment:
Receiving: Horn T711, and Chamber G SMA Cables
Substitution: Horn T59, 6ft SMA Cable

f MHz	SG reading (dBm)	Ant. Pol. (H/V)	Cable Loss (dB)	Antenna Gain (dBi)	EIRP (dBm)	Limit (dBm)	Delta (dB)	Notes
Low Ch								
1857.50	14.40	V	0.9	9.2	22.70	33.0	-10.3	
1857.50	15.87	H	0.9	9.2	24.17	33.0	-8.8	
Mid Ch								
1880.00	15.95	V	0.9	9.2	24.25	33.0	-8.8	
1880.00	18.20	H	0.9	9.2	26.50	33.0	-6.5	
High Ch								
1902.50	16.10	V	0.9	9.1	24.30	33.0	-8.7	
1902.50	17.90	H	0.9	9.1	26.10	33.0	-6.9	

This report shall not be reproduced except in full, without the written approval of UL Verification Services Inc.

Band

LTE2

10MHz

16QAM

High Frequency Substitution Measurement
UL Verification Services, Inc.

Company: LG
Project #: 15I20527
Date: 4/22/2015
Test Engineer: R.Z
Configuration: EUT Only
Location: Chamber G
Mode: LTE_16QAM Band 2 Fundamentals, 10MHz Bandwidth

Test Equpment:
Receiving: Horn T711, and Chamber G SMA Cables
Substitution: Horn T59, 6ft SMA Cable

f MHz	SG reading (dBm)	Ant. Pol. (H/V)	Cable Loss (dB)	Antenna Gain (dBi)	EIRP (dBm)	Limit (dBm)	Delta (dB)	Notes
Low Ch								
1855.00	13.78	V	0.9	9.2	22.08	33.0	-10.9	
1855.00	15.30	H	0.9	9.2	23.60	33.0	-9.4	
Mid Ch								
1880.00	15.70	V	0.9	9.2	24.00	33.0	-9.0	
1880.00	17.10	H	0.9	9.2	25.40	33.0	-7.6	
High Ch								
1905.00	15.10	V	0.9	9.1	23.30	33.0	-9.7	
1905.00	16.50	H	0.9	9.1	24.70	33.0	-8.3	

This report shall not be reproduced except in full, without the written approval of UL Verification Services Inc.

Band

LTE2

10MHz

QPSK

High Frequency Substitution Measurement
UL Verification Services, Inc.

Company: LG
Project #: 15I20527
Date: 4/22/2015
Test Engineer: R.Z
Configuration: EUT Only
Location: Chamber G
Mode: LTE_QPSK Band 2 Fundamentals, 10MHz Bandwidth

Test Equpment:
Receiving: Horn T711, and Chamber G SMA Cables
Substitution: Horn T59, 6ft SMA Cable

f MHz	SG reading (dBm)	Ant. Pol. (H/V)	Cable Loss (dB)	Antenna Gain (dBi)	EIRP (dBm)	Limit (dBm)	Delta (dB)	Notes
Low Ch								
1855.00	14.40	V	0.9	9.2	22.70	33.0	-10.3	
1855.00	15.70	H	0.9	9.2	24.00	33.0	-9.0	
Mid Ch								
1880.00	16.40	V	0.9	9.2	24.70	33.0	-8.3	
1880.00	17.70	H	0.9	9.2	26.00	33.0	-7.0	
High Ch								
1905.00	15.90	V	0.9	9.1	24.10	33.0	-8.9	
1905.00	17.00	H	0.9	9.1	25.20	33.0	-7.8	

This report shall not be reproduced except in full, without the written approval of UL Verification Services Inc.

Band

LTE2

5MHz

16QAM

High Frequency Substitution Measurement
UL Verification Services, Inc.

Company: LG
Project #: 15I20527
Date: 4/23/2015
Test Engineer: R.Z
Configuration: EUT Only
Location: Chamber G
Mode: LTE_16QAM Band 2 Fundamentals, 5MHz Bandwidth

Test Equpment:
Receiving: Horn T711, and Chamber G SMA Cables
Substitution: Horn T59, 6ft SMA Cable

f MHz	SG reading (dBm)	Ant. Pol. (H/V)	Cable Loss (dB)	Antenna Gain (dBi)	EIRP (dBm)	Limit (dBm)	Delta (dB)	Notes
Low Ch								
1852.50	13.20	V	0.9	9.2	21.50	33.0	-11.5	
1852.50	14.00	H	0.9	9.2	22.30	33.0	-10.7	
Mid Ch								
1880.00	15.50	V	0.9	9.2	23.80	33.0	-9.2	
1880.00	16.90	H	0.9	9.2	25.20	33.0	-7.8	
High Ch								
1907.50	16.20	V	0.9	9.1	24.40	33.0	-8.6	
1907.50	15.60	H	0.9	9.1	23.80	33.0	-9.2	

This report shall not be reproduced except in full, without the written approval of UL Verification Services Inc.

Band

LTE2

5MHz

QPSK

High Frequency Substitution Measurement
UL Verification Services, Inc.

Company: LG
Project #: 15I20527
Date: 4/23/2015
Test Engineer: R.Z
Configuration: EUT Only
Location: Chamber G
Mode: LTE_QPSK Band 2 Fundamentals, 5MHz Bandwidth

Test Equpment:
Receiving: Horn T711, and Chamber G SMA Cables
Substitution: Horn T59, 6ft SMA Cable

f MHz	SG reading (dBm)	Ant. Pol. (H/V)	Cable Loss (dB)	Antenna Gain (dBi)	EIRP (dBm)	Limit (dBm)	Delta (dB)	Notes
Low Ch								
1852.50	14.00	V	0.9	9.2	22.30	33.0	-10.7	
1852.50	14.70	H	0.9	9.2	23.00	33.0	-10.0	
Mid Ch								
1880.00	16.30	V	0.9	9.2	24.60	33.0	-8.4	
1880.00	17.50	H	0.9	9.2	25.80	33.0	-7.2	
High Ch								
1907.50	16.00	V	0.9	9.1	24.20	33.0	-8.8	
1907.50	16.64	H	0.9	9.1	24.84	33.0	-8.2	

This report shall not be reproduced except in full, without the written approval of UL Verification Services Inc.

Band

LTE2

3MHz

16QAM

High Frequency Substitution Measurement
UL Verification Services, Inc.

Company: LG
Project #: 15I20527
Date: 4/22/2015
Test Engineer: R.Z
Configuration: EUT Only
Location: Chamber G
Mode: LTE_16QAM Band 2 Fundamentals, 3MHz Bandwidth

Test Equpment:
Receiving: Horn T711, and Chamber G SMA Cables
Substitution: Horn T59, 6ft SMA Cable

f MHz	SG reading (dBm)	Ant. Pol. (H/V)	Cable Loss (dB)	Antenna Gain (dBi)	EIRP (dBm)	Limit (dBm)	Delta (dB)	Notes
Low Ch								
1851.50	12.10	V	0.9	9.2	20.40	33.0	-12.6	-26.5
1851.50	13.20	H	0.9	9.2	21.50	33.0	-11.5	-25.0
Mid Ch								
1880.00	16.10	V	0.9	9.2	24.40	33.0	-8.6	-23.3
1880.00	17.20	H	0.9	9.2	25.50	33.0	-7.5	-22.0
High Ch								
1908.50	16.10	V	0.9	9.1	24.30	33.0	-8.7	-23.9
1908.50	17.10	H	0.9	9.1	25.30	33.0	-7.7	-22.4

This report shall not be reproduced except in full, without the written approval of UL Verification Services Inc.

Band

LTE2

3MHz

QPSK

High Frequency Substitution Measurement
UL Verification Services, Inc.

Company: LG
Project #: 15I20527
Date: 4/22/2015
Test Engineer: R.Z
Configuration: EUT Only
Location: Chamber G
Mode: LTE_QPSK Band 2 Fundamentals, 3MHz Bandwidth

Test Equpment:
Receiving: Horn T711, and Chamber G SMA Cables
Substitution: Horn T59, 6ft SMA Cable

f MHz	SG reading (dBm)	Ant. Pol. (H/V)	Cable Loss (dB)	Antenna Gain (dBi)	EIRP (dBm)	Limit (dBm)	Delta (dB)	Notes
Low Ch								
1851.50	13.00	V	0.9	9.2	21.30	33.0	-11.7	
1851.50	14.20	H	0.9	9.2	22.50	33.0	-10.5	
Mid Ch								
1880.00	16.40	V	0.9	9.2	24.70	33.0	-8.3	
1880.00	17.70	H	0.9	9.2	26.00	33.0	-7.0	
High Ch								
1908.50	16.60	V	0.9	9.1	24.80	33.0	-8.2	
1908.50	17.50	H	0.9	9.1	25.70	33.0	-7.3	

This report shall not be reproduced except in full, without the written approval of UL Verification Services Inc.

Band

LTE2

1.4MHz

16QAM

High Frequency Substitution Measurement
UL Verification Services, Inc.

Company: LG
Project #: 15I20527
Date: 4/23/2015
Test Engineer: R.Z
Configuration: EUT Only
Location: Chamber G
Mode: LTE_16QAM Band 2 Fundamentals, 1.4MHz Bandwidth

Test Equpment:
Receiving: Horn T711, and Chamber G SMA Cables
Substitution: Horn T59, 6ft SMA Cable

f MHz	SG reading (dBm)	Ant. Pol. (H/V)	Cable Loss (dB)	Antenna Gain (dBi)	EIRP (dBm)	Limit (dBm)	Delta (dB)	Notes
Low Ch								
1850.70	13.90	V	0.9	9.2	22.20	33.0	-10.8	
1850.70	14.73	H	0.9	9.2	23.03	33.0	-10.0	
Mid Ch								
1880.00	15.40	V	0.9	9.2	23.70	33.0	-9.3	
1880.00	17.30	H	0.9	9.2	25.60	33.0	-7.4	
High Ch								
1909.30	15.60	V	0.9	9.1	23.80	33.0	-9.2	
1909.30	16.80	H	0.9	9.1	25.00	33.0	-8.0	

This report shall not be reproduced except in full, without the written approval of UL Verification Services Inc.

Band

LTE2

1.4MHz

QPSK

High Frequency Substitution Measurement
UL Verification Services, Inc.

Company: LG
Project #: 15I20527
Date: 4/23/2015
Test Engineer: R.Z
Configuration: EUT Only
Location: Chamber G
Mode: LTE_QPSK Band 2 Fundamentals, 1.4MHz Bandwidth

Test Equpment:
Receiving: Horn T711, and Chamber G SMA Cables
Substitution: Horn T59, 6ft SMA Cable

f MHz	SG reading (dBm)	Ant. Pol. (H/V)	Cable Loss (dB)	Antenna Gain (dBi)	EIRP (dBm)	Limit (dBm)	Delta (dB)	Notes
Low Ch								
1850.70	14.80	V	0.9	9.2	23.14	33.0	-9.9	
1850.70	15.80	H	0.9	9.2	24.14	33.0	-8.9	
Mid Ch								
1880.00	16.30	V	0.9	9.2	24.55	33.0	-8.5	
1880.00	17.75	H	0.9	9.2	26.00	33.0	-7.0	
High Ch								
1909.30	16.50	V	0.9	9.1	24.67	33.0	-8.3	
1909.30	17.30	H	0.9	9.1	25.47	33.0	-7.5	

This report shall not be reproduced except in full, without the written approval of UL Verification Services Inc.

LTE Band 4

Band

LTE4

20MHz

16QAM

High Frequency Substitution Measurement
UL Verification Services, Inc.

Company: LG Electronics
Project #: 15I20527
Date: 4/24/2015
Test Engineer: R.Z
Configuration: EUT ONLY
Location: Chamber F
Mode: LTE_16QAM Band 4 Fundamentals, 20MHz Bandwidth

Test Equpment:
Receiving: Horn T120, and Chamber F SMA Cables
Substitution: Horn T60, 6ft SMA Cable

f MHz	SG reading (dBm)	Ant. Pol. (H/V)	Cable Loss (dB)	Antenna Gain (dBi)	EIRP (dBm)	Limit (dBm)	Delta (dB)	Notes
Low Ch								
1720.00	12.20	V	0.9	8.2	19.52	30.0	-10.5	
1720.00	13.50	H	0.9	8.2	20.82	30.0	-9.2	
Mid Ch								
1732.50	12.20	V	0.9	8.2	19.47	30.0	-10.5	
1732.50	13.00	H	0.9	8.2	20.27	30.0	-9.7	
High Ch								
1745.00	12.43	V	0.9	8.1	19.66	30.0	-10.3	
1745.00	13.70	H	0.9	8.1	20.93	30.0	-9.1	

This report shall not be reproduced except in full, without the written approval of UL Verification Services Inc.

Band

LTE4

20MHz

QPSK

High Frequency Substitution Measurement
UL Verification Services, Inc.

Company: LG Electronics
Project #: 15I20527
Date: 4/24/2015
Test Engineer: R.Z
Configuration: EUT ONLY
Location: Chamber F
Mode: LTE_QPSK Band 4 Fundamentals, 20MHz Bandwidth

Test Equpment:
Receiving: Horn T120, and Chamber F SMA Cables
Substitution: Horn T60, 6ft SMA Cable

f MHz	SG reading (dBm)	Ant. Pol. (H/V)	Cable Loss (dB)	Antenna Gain (dBi)	EIRP (dBm)	Limit (dBm)	Delta (dB)	Notes
Low Ch								
1720.00	13.20	V	0.9	8.2	20.52	30.0	-9.5	
1720.00	14.50	H	0.9	8.2	21.82	30.0	-8.2	
Mid Ch								
1732.50	13.10	V	0.9	8.2	20.37	30.0	-9.6	
1732.50	14.10	H	0.9	8.2	21.37	30.0	-8.6	
High Ch								
1745.00	13.08	V	0.9	8.1	20.31	30.0	-9.7	
1745.00	14.90	H	0.9	8.1	22.13	30.0	-7.9	

This report shall not be reproduced except in full, without the written approval of UL Verification Services Inc.

Band

LTE4

15MHz

16QAM

High Frequency Substitution Measurement
UL Verification Services, Inc.

Company: LG Electronics
Project #: 15I20527
Date: 4/24/2015
Test Engineer: R.Z
Configuration: EUT ONLY
Location: Chamber F
Mode: LTE_16QAM Band 4 Fundamentals, 15MHz Bandwidth

Test Equpment:
Receiving: Horn T120, and Chamber F SMA Cables
Substitution: Horn T60, 6ft SMA Cable

f MHz	SG reading (dBm)	Ant. Pol. (H/V)	Cable Loss (dB)	Antenna Gain (dBi)	EIRP (dBm)	Limit (dBm)	Delta (dB)	Notes
Low Ch								
1717.50	12.90	V	0.9	8.2	20.23	30.0	-9.8	
1717.50	14.38	H	0.9	8.2	21.71	30.0	-8.3	
Mid Ch								
1732.50	12.82	V	0.9	8.2	20.09	30.0	-9.9	
1732.50	14.00	H	0.9	8.2	21.27	30.0	-8.7	
High Ch								
1747.50	12.35	V	0.9	8.1	19.57	30.0	-10.4	
1747.50	14.62	H	0.9	8.1	21.84	30.0	-8.2	

This report shall not be reproduced except in full, without the written approval of UL Verification Services Inc.

Band

LTE4

15MHz

QPSK

High Frequency Substitution Measurement
UL Verification Services, Inc.

Company: LG Electronics
Project #: 15I20527
Date: 4/24/2015
Test Engineer: R.Z
Configuration: EUT ONLY
Location: Chamber F
Mode: LTE_QPSK Band 4 Fundamentals, 15MHz Bandwidth

Test Equpment:
Receiving: Horn T120, and Chamber F SMA Cables
Substitution: Horn T60, 6ft SMA Cable

f MHz	SG reading (dBm)	Ant. Pol. (H/V)	Cable Loss (dB)	Antenna Gain (dBi)	EIRP (dBm)	Limit (dBm)	Delta (dB)	Notes
Low Ch								
1717.50	13.40	V	0.9	8.2	20.73	30.0	-9.3	
1717.50	14.92	H	0.9	8.2	22.25	30.0	-7.8	
Mid Ch								
1732.50	13.35	V	0.9	8.2	20.62	30.0	-9.4	
1732.50	14.69	H	0.9	8.2	21.96	30.0	-8.0	
High Ch								
1747.50	12.70	V	0.9	8.1	19.92	30.0	-10.1	
1747.50	14.97	H	0.9	8.1	22.19	30.0	-7.8	

This report shall not be reproduced except in full, without the written approval of UL Verification Services Inc.

Band

LTE4

10MHz

16QAM

High Frequency Substitution Measurement
UL Verification Services, Inc.

Company: LG Electronics
Project #: 15I20527
Date: 4/24/2015
Test Engineer: R.Z
Configuration: EUT ONLY
Location: Chamber G
Mode: LTE_16QAM Band 4 Fundamentals, 10MHz Bandwidth

Test Equpment:
Receiving: Horn T120, and Chamber F SMA Cables
Substitution: Horn T60, 6ft SMA Cable

f MHz	SG reading (dBm)	Ant. Pol. (H/V)	Cable Loss (dB)	Antenna Gain (dBi)	EIRP (dBm)	Limit (dBm)	Delta (dB)	Notes
Low Ch								
1715.00	12.96	V	0.9	8.2	20.29	30.0	-9.7	
1715.00	14.02	H	0.9	8.2	21.36	30.0	-8.6	
Mid Ch								
1732.50	12.48	V	0.9	8.2	19.75	30.0	-10.2	
1732.50	13.85	H	0.9	8.2	21.12	30.0	-8.9	
High Ch								
1750.00	11.92	V	0.9	8.1	19.13	30.0	-10.9	
1750.00	14.13	H	0.9	8.1	21.34	30.0	-8.7	

This report shall not be reproduced except in full, without the written approval of UL Verification Services Inc.

Band

LTE4

10MHz

QPSK

High Frequency Substitution Measurement
UL Verification Services, Inc.

Company: LG Electronics
Project #: 15I20527
Date: 4/24/2015
Test Engineer: R.Z
Configuration: EUT ONLY
Location: Chamber G
Mode: LTE_QPSK Band 4 Fundamentals, 10MHz Bandwidth

Test Equpment:
Receiving: Horn T120, and Chamber F SMA Cables
Substitution: Horn T60, 6ft SMA Cable

f MHz	SG reading (dBm)	Ant. Pol. (H/V)	Cable Loss (dB)	Antenna Gain (dBi)	EIRP (dBm)	Limit (dBm)	Delta (dB)	Notes
Low Ch								
1715.00	13.56	V	0.9	8.2	20.89	30.0	-9.1	
1715.00	14.79	H	0.9	8.2	22.13	30.0	-7.9	
Mid Ch								
1732.50	13.33	V	0.9	8.2	20.60	30.0	-9.4	
1732.50	14.62	H	0.9	8.2	21.89	30.0	-8.1	
High Ch								
1750.00	12.62	V	0.9	8.1	19.83	30.0	-10.2	
1750.00	14.90	H	0.9	8.1	22.11	30.0	-7.9	

This report shall not be reproduced except in full, without the written approval of UL Verification Services Inc.

Band

LTE4

5MHz

16QAM

High Frequency Substitution Measurement
UL Verification Services, Inc.

Company: LG Electronics
Project #: 15I20527
Date: 4/23/2015
Test Engineer: R.Z
Configuration: EUT ONLY
Location: Chamber F
Mode: LTE_16QAM Band 4 Fundamentals, 5MHz Bandwidth

Test Equpment:
Receiving: Horn T120, and Chamber F SMA Cables
Substitution: Horn T60, 6ft SMA Cable

f MHz	SG reading (dBm)	Ant. Pol. (H/V)	Cable Loss (dB)	Antenna Gain (dBi)	EIRP (dBm)	Limit (dBm)	Delta (dB)	Notes
Low Ch								
1712.50	12.70	V	0.9	8.2	20.04	30.0	-10.0	
1712.50	13.80	H	0.9	8.2	21.14	30.0	-8.9	
Mid Ch								
1732.50	12.00	V	0.9	8.2	19.27	30.0	-10.7	
1732.50	13.66	H	0.9	8.2	20.93	30.0	-9.1	
High Ch								
1752.50	11.80	V	0.9	8.1	19.00	30.0	-11.0	
1752.50	14.04	H	0.9	8.1	21.24	30.0	-8.8	

This report shall not be reproduced except in full, without the written approval of UL Verification Services Inc.

Band

LTE4

5MHz

QPSK

High Frequency Substitution Measurement
UL Verification Services, Inc.

Company: LG Electronics
Project #: 15I20527
Date: 4/23/2015
Test Engineer: R.Z
Configuration: EUT ONLY
Location: Chamber F
Mode: LTE_QPSK Band 4 Fundamentals, 5MHz Bandwidth

Test Equpment:
Receiving: Horn T120, and Chamber F SMA Cables
Substitution: Horn T60, 6ft SMA Cable

f MHz	SG reading (dBm)	Ant. Pol. (H/V)	Cable Loss (dB)	Antenna Gain (dBi)	EIRP (dBm)	Limit (dBm)	Delta (dB)	Notes
Low Ch								
1712.50	13.80	V	0.9	8.2	21.14	30.0	-8.9	
1712.50	14.60	H	0.9	8.2	21.94	30.0	-8.1	
Mid Ch								
1732.50	13.20	V	0.9	8.2	20.47	30.0	-9.5	
1732.50	14.47	H	0.9	8.2	21.74	30.0	-8.3	
High Ch								
1752.50	12.90	V	0.9	8.1	20.10	30.0	-9.9	
1752.50	15.00	H	0.9	8.1	22.20	30.0	-7.8	

This report shall not be reproduced except in full, without the written approval of UL Verification Services Inc.

Band

LTE4

3MHz

16QAM

High Frequency Substitution Measurement
UL Verification Services, Inc.

Company: LG Electronics
Project #: 15I20527
Date: 4/23/2015
Test Engineer: R.Z
Configuration: EUT ONLY
Location: Chamber F
Mode: LTE_16QAM Band 4 Fundamentals, 3MHz Bandwidth

Test Equpment:
Receiving: Horn T120, and Chamber F SMA Cables
Substitution: Horn T60, 6ft SMA Cable

f MHz	SG reading (dBm)	Ant. Pol. (H/V)	Cable Loss (dB)	Antenna Gain (dBi)	EIRP (dBm)	Limit (dBm)	Delta (dB)	Notes
Low Ch								
1711.50	13.65	V	0.9	8.2	21.00	30.0	-9.0	
1711.50	14.80	H	0.9	8.2	22.15	30.0	-7.9	
Mid Ch								
1732.50	12.80	V	0.9	8.2	20.07	30.0	-9.9	
1732.50	14.40	H	0.9	8.2	21.67	30.0	-8.3	
High Ch								
1753.50	12.30	V	0.9	8.1	19.49	30.0	-10.5	
1753.50	14.70	H	0.9	8.1	21.89	30.0	-8.1	

This report shall not be reproduced except in full, without the written approval of UL Verification Services Inc.

Band

LTE4

3MHz

QPSK

High Frequency Substitution Measurement
UL Verification Services, Inc.

Company: LG Electronics
Project #: 15I20527
Date: 4/23/2015
Test Engineer: R.Z
Configuration: EUT ONLY
Location: Chamber F
Mode: LTE_QPSK Band 4 Fundamentals, 3MHz Bandwidth

Test Equpment:
Receiving: Horn T120, and Chamber F SMA Cables
Substitution: Horn T60, 6ft SMA Cable

f MHz	SG reading (dBm)	Ant. Pol. (H/V)	Cable Loss (dB)	Antenna Gain (dBi)	EIRP (dBm)	Limit (dBm)	Delta (dB)	Notes
Low Ch								
1711.50	14.00	V	0.9	8.2	21.35	30.0	-8.7	
1711.50	15.00	H	0.9	8.2	22.35	30.0	-7.7	
Mid Ch								
1732.50	13.40	V	0.9	8.2	20.67	30.0	-9.3	
1732.50	14.67	H	0.9	8.2	21.94	30.0	-8.1	
High Ch								
1753.50	12.90	V	0.9	8.1	20.09	30.0	-9.9	
1753.50	15.00	H	0.9	8.1	22.19	30.0	-7.8	

This report shall not be reproduced except in full, without the written approval of UL Verification Services Inc.

Band

LTE4

1.4MHz

16QAM

High Frequency Substitution Measurement
UL Verification Services, Inc.

Company: LG Electronics
Project #: 15I20527
Date: 4/23/2015
Test Engineer: R.Z
Configuration: EUT ONLY
Location: Chamber F
Mode: LTE_16QAM Band 4 Fundamentals, 1.4MHz Bandwidth

Test Equpment:
Receiving: Horn T120, and Chamber F SMA Cables
Substitution: Horn T60, 6ft SMA Cable

f MHz	SG reading (dBm)	Ant. Pol. (H/V)	Cable Loss (dB)	Antenna Gain (dBi)	EIRP (dBm)	Limit (dBm)	Delta (dB)	Notes
Low Ch								
1710.70	12.80	V	0.9	8.3	20.15	30.0	-9.8	
1710.70	14.55	H	0.9	8.3	21.90	30.0	-8.1	
Mid Ch								
1732.50	12.80	V	0.9	8.2	20.07	30.0	-9.9	
1732.50	14.20	H	0.9	8.2	21.47	30.0	-8.5	
High Ch								
1754.30	12.30	V	0.9	8.1	19.49	30.0	-10.5	
1754.30	14.40	H	0.9	8.1	21.59	30.0	-8.4	

This report shall not be reproduced except in full, without the written approval of UL Verification Services Inc.

Band

LTE4

1.4MHz

QPSK

High Frequency Substitution Measurement
UL Verification Services, Inc.

Company: LG Electronics
Project #: 15I20527
Date: 4/23/2015
Test Engineer: R.Z
Configuration: EUT ONLY
Location: Chamber F
Mode: LTE_QPSK Band 4 Fundamentals, 1.4MHz Bandwidth

Test Equpment:
Receiving: Horn T120, and Chamber F SMA Cables
Substitution: Horn T60, 6ft SMA Cable

f MHz	SG reading (dBm)	Ant. Pol. (H/V)	Cable Loss (dB)	Antenna Gain (dBi)	EIRP (dBm)	Limit (dBm)	Delta (dB)	Notes
Low Ch								
1710.70	13.30	V	0.9	8.3	20.65	30.0	-9.3	
1710.70	14.86	H	0.9	8.3	22.21	30.0	-7.8	
Mid Ch								
1732.50	13.16	V	0.9	8.2	20.43	30.0	-9.6	
1732.50	14.60	H	0.9	8.2	21.87	30.0	-8.1	
High Ch								
1754.30	12.70	V	0.9	8.1	19.89	30.0	-10.1	
1754.30	14.90	H	0.9	8.1	22.09	30.0	-7.9	

This report shall not be reproduced except in full, without the written approval of UL Verification Services Inc.

LTE Band 5

Band

LTE5

10MHz

16QAM

High Frequency Substitution Measurement
UL Verification Services, Inc.

Company: LG Electronics
Project #: 15I20527
Date: 4/27/2015
Test Engineer: R.Z
Configuration: EUT Only
Location: Chamber F
Mode: LTE_16QAM Band 5 Fundamentals, 10MHz Bandwidth

Test Equpment:
Receiving: Hybrid T122, and Chamber F SMA Cables
Substitution: Dipole T416, 6ft SMA Cable Warehouse

f MHz	SG reading (dBm)	Ant. Pol. (H/V)	Cable Loss (dB)	Antenna Gain (dBd)	ERP (dBm)	Limit (dBm)	Delta (dB)	Notes
Low Ch								
829.00	16.50	V	0.9	0.0	15.60	38.5	-22.9	
829.00	21.80	H	0.9	0.0	20.90	38.5	-17.6	
Mid Ch								
836.50	15.50	V	0.9	0.0	14.60	38.5	-23.9	
836.50	21.94	H	0.9	0.0	21.04	38.5	-17.5	
High Ch								
844.00	16.22	V	0.9	0.0	15.32	38.5	-23.2	
844.00	22.10	H	0.9	0.0	21.20	38.5	-17.3	

This report shall not be reproduced except in full, without the written approval of UL Verification Services Inc.

Band

LTE5

10MHz

QPSK

High Frequency Substitution Measurement
UL Verification Services, Inc.

Company: LG Electronics
Project #: 15I20527
Date: 4/27/2015
Test Engineer: R.Z
Configuration: EUT Only
Location: Chamber F
Mode: LTE_QPSK Band 5 Fundamentals, 10MHz Bandwidth

Test Equpment:
Receiving: Hybrid T122, and Chamber F SMA Cables
Substitution: Dipole T416, 6ft SMA Cable Warehouse

f MHz	SG reading (dBm)	Ant. Pol. (H/V)	Cable Loss (dB)	Antenna Gain (dBd)	ERP (dBm)	Limit (dBm)	Delta (dB)	Notes
Low Ch								
829.00	17.40	V	0.9	0.0	16.50	38.5	-22.0	
829.00	22.60	H	0.9	0.0	21.70	38.5	-16.8	
Mid Ch								
836.50	16.40	V	0.9	0.0	15.50	38.5	-23.0	
836.50	22.58	H	0.9	0.0	21.68	38.5	-16.8	
High Ch								
844.00	17.12	V	0.9	0.0	16.22	38.5	-22.3	
844.00	22.70	H	0.9	0.0	21.80	38.5	-16.7	

This report shall not be reproduced except in full, without the written approval of UL Verification Services Inc.

Band

LTE5

5MHz

16QAM

High Frequency Substitution Measurement
UL Verification Services, Inc.

Company: LG Electronics
Project #: 15I20527
Date: 4/27/2015
Test Engineer: R.Z
Configuration: EUT Only
Location: Chamber F
Mode: LTE_16QAM Band 5 Fundamentals, 5MHz Bandwidth

Test Equpment:
Receiving: Hybrid T122, and Chamber F SMA Cables
Substitution: Dipole T416, 6ft SMA Cable Warehouse

f MHz	SG reading (dBm)	Ant. Pol. (H/V)	Cable Loss (dB)	Antenna Gain (dBd)	ERP (dBm)	Limit (dBm)	Delta (dB)	Notes
Low Ch								
826.50	15.30	V	0.9	0.0	14.40	38.5	-24.1	
826.50	21.30	H	0.9	0.0	20.40	38.5	-18.1	
Mid Ch								
836.50	15.24	V	0.9	0.0	14.34	38.5	-24.2	
836.50	21.34	H	0.9	0.0	20.44	38.5	-18.1	
High Ch								
846.50	15.58	V	0.9	0.0	14.68	38.5	-23.8	
846.50	21.84	H	0.9	0.0	20.94	38.5	-17.6	

This report shall not be reproduced except in full, without the written approval of UL Verification Services Inc.

Band

LTE5

5MHz

QPSK

High Frequency Substitution Measurement
UL Verification Services, Inc.

Company: LG Electronics
Project #: 15I20527
Date: 4/27/2015
Test Engineer: R.Z
Configuration: EUT Only
Location: Chamber F
Mode: LTE_QPSK Band 5 Fundamentals, 5MHz Bandwidth

Test Equpment:
Receiving: Hybrid T122, and Chamber F SMA Cables
Substitution: Dipole T416, 6ft SMA Cable Warehouse

f MHz	SG reading (dBm)	Ant. Pol. (H/V)	Cable Loss (dB)	Antenna Gain (dBd)	ERP (dBm)	Limit (dBm)	Delta (dB)	Notes
Low Ch								
826.50	16.40	V	0.9	0.0	15.50	38.5	-23.0	
826.50	22.20	H	0.9	0.0	21.30	38.5	-17.2	
Mid Ch								
836.50	16.40	V	0.9	0.0	15.50	38.5	-23.0	
836.50	22.34	H	0.9	0.0	21.44	38.5	-17.1	
High Ch								
846.50	16.59	V	0.9	0.0	15.69	38.5	-22.8	
846.50	22.84	H	0.9	0.0	21.94	38.5	-16.6	

This report shall not be reproduced except in full, without the written approval of UL Verification Services Inc.

Band

LTE5

3MHz

16QAM

High Frequency Substitution Measurement
UL Verification Services, Inc.

Company: LG Electronics
Project #: 15I20527
Date: 4/27/2015
Test Engineer: R.Z
Configuration: EUT Only
Location: Chamber F
Mode: LTE_16QAM Band 5 Fundamentals, 3MHz Bandwidth

Test Equpment:
Receiving: Hybrid T122, and Chamber F SMA Cables
Substitution: Dipole T416, 6ft SMA Cable Warehouse

f MHz	SG reading (dBm)	Ant. Pol. (H/V)	Cable Loss (dB)	Antenna Gain (dBd)	ERP (dBm)	Limit (dBm)	Delta (dB)	Notes
Low Ch								
825.50	16.42	V	0.9	0.0	15.52	38.5	-23.0	
825.50	21.90	H	0.9	0.0	21.00	38.5	-17.5	
Mid Ch								
836.50	15.50	V	0.9	0.0	14.60	38.5	-23.9	
836.50	22.24	H	0.9	0.0	21.34	38.5	-17.2	
High Ch								
847.50	15.72	V	0.9	0.0	14.82	38.5	-23.7	
847.50	22.83	H	0.9	0.0	21.93	38.5	-16.6	

This report shall not be reproduced except in full, without the written approval of UL Verification Services Inc.

Band

LTE5

3MHz

QPSK

High Frequency Substitution Measurement
UL Verification Services, Inc.

Company: LG Electronics
Project #: 15I20527
Date: 4/27/2015
Test Engineer: R.Z
Configuration: EUT Only
Location: Chamber F
Mode: LTE_QPSK Band 5 Fundamentals, 3MHz Bandwidth

Test Equpment:
Receiving: Hybrid T122, and Chamber F SMA Cables
Substitution: Dipole T416, 6ft SMA Cable Warehouse

f MHz	SG reading (dBm)	Ant. Pol. (H/V)	Cable Loss (dB)	Antenna Gain (dBd)	ERP (dBm)	Limit (dBm)	Delta (dB)	Notes
Low Ch								
825.50	16.60	V	0.9	0.0	15.70	38.5	-22.8	
825.50	22.30	H	0.9	0.0	21.40	38.5	-17.1	
Mid Ch								
836.50	16.50	V	0.9	0.0	15.60	38.5	-22.9	
836.50	22.71	H	0.9	0.0	21.81	38.5	-16.7	
High Ch								
847.50	16.72	V	0.9	0.0	15.82	38.5	-22.7	
847.50	23.25	H	0.9	0.0	22.35	38.5	-16.2	

This report shall not be reproduced except in full, without the written approval of UL Verification Services Inc.

Band

LTE5

1.4MHz

16QAM

High Frequency Substitution Measurement
UL Verification Services, Inc.

Company: LG Electronics
Project #: 15I20527
Date: 4/27/2015
Test Engineer: R.Z
Configuration: EUT Only
Location: Chamber F
Mode: LTE_16QAM Band 5 Fundamentals, 1.4MHz Bandwidth

Test Equpment:
Receiving: Hybrid T122, and Chamber F SMA Cables
Substitution: Dipole T416, 6ft SMA Cable Warehouse

f MHz	SG reading (dBm)	Ant. Pol. (H/V)	Cable Loss (dB)	Antenna Gain (dBd)	ERP (dBm)	Limit (dBm)	Delta (dB)	Notes
Low Ch								
824.70	16.50	V	0.9	0.0	15.60	38.5	-22.9	
824.70	21.90	H	0.9	0.0	21.00	38.5	-17.5	
Mid Ch								
836.50	15.90	V	0.9	0.0	15.00	38.5	-23.5	
836.50	22.24	H	0.9	0.0	21.34	38.5	-17.2	
High Ch								
848.30	15.72	V	0.9	0.0	14.82	38.5	-23.7	
848.30	22.30	H	0.9	0.0	21.40	38.5	-17.1	

This report shall not be reproduced except in full, without the written approval of UL Verification Services Inc.

Band

LTE5

1.4MHz

QPSK

High Frequency Substitution Measurement
UL Verification Services, Inc.

Company: LG Electronics
Project #: 15I20527
Date: 4/27/2015
Test Engineer: R.Z
Configuration: EUT Only
Location: Chamber F
Mode: LTE_QPSK Band 5 Fundamentals, 1.4MHz Bandwidth

Test Equpment:
Receiving: Hybrid T122, and Chamber F SMA Cables
Substitution: Dipole T416, 6ft SMA Cable Warehouse

f MHz	SG reading (dBm)	Ant. Pol. (H/V)	Cable Loss (dB)	Antenna Gain (dBd)	ERP (dBm)	Limit (dBm)	Delta (dB)	Notes
Low Ch								
824.70	16.90	V	0.9	0.0	16.00	38.5	-22.5	
824.70	22.10	H	0.9	0.0	21.20	38.5	-17.3	
Mid Ch								
836.50	16.30	V	0.9	0.0	15.40	38.5	-23.1	
836.50	22.34	H	0.9	0.0	21.44	38.5	-17.1	
High Ch								
848.30	16.22	V	0.9	0.0	15.32	38.5	-23.2	
848.30	22.70	H	0.9	0.0	21.80	38.5	-16.7	

This report shall not be reproduced except in full, without the written approval of UL Verification Services Inc.

LTE Band 12

Band

LTE12

10MHz

16QAM

High Frequency Substitution Measurement
UL Verification Services, Inc.

Company: LG
Project #: 15I20527
Date: 4/27/2015
Test Engineer: R.Z
Configuration: EUT Only
Location: Chamber F
Mode: LTE_16QAM Band 12 Fundamentals, 10MHz Bandwidth

Test Equpment:
Receiving: Hybrid T122, and Chamber F SMA Cables
Substitution: Dipole T416, 6ft SMA Cable

f MHz	SG reading (dBm)	Ant. Pol. (H/V)	Cable Loss (dB)	Antenna Gain (dBd)	ERP (dBm)	Limit (dBm)	Delta (dB)	Notes
Low Ch								
704.00	10.97	V	0.9	0.0	10.07	38.5	-28.4	
704.00	18.80	H	0.9	0.0	17.90	38.5	-20.6	
Mid Ch								
707.50	11.40	V	0.9	0.0	10.50	38.5	-28.0	
707.50	19.00	H	0.9	0.0	18.10	38.5	-20.4	
High Ch								
711.00	11.74	V	0.9	0.0	10.84	38.5	-27.7	
711.00	19.80	H	0.9	0.0	18.90	38.5	-19.6	

This report shall not be reproduced except in full, without the written approval of UL Verification Services Inc.

Band

LTE12

10MHz

QPSK

High Frequency Substitution Measurement
UL Verification Services, Inc.

Company: LG
Project #: 15I20527
Date: 4/27/2015
Test Engineer: R.Z
Configuration: EUT Only
Location: Chamber F
Mode: LTE_QPSK Band 12 Fundamentals, 10MHz Bandwidth

Test Equpment:
Receiving: Hybrid T122, and Chamber F SMA Cables
Substitution: Dipole T416, 6ft SMA Cable

f MHz	SG reading (dBm)	Ant. Pol. (H/V)	Cable Loss (dB)	Antenna Gain (dBd)	ERP (dBm)	Limit (dBm)	Delta (dB)	Notes
Low Ch								
704.00	11.69	V	0.9	0.0	10.79	38.5	-27.7	
704.00	19.30	H	0.9	0.0	18.40	38.5	-20.1	
Mid Ch								
707.50	12.35	V	0.9	0.0	11.45	38.5	-27.1	
707.50	20.00	H	0.9	0.0	19.10	38.5	-19.4	
High Ch								
711.00	12.72	V	0.9	0.0	11.82	38.5	-26.7	
711.00	20.60	H	0.9	0.0	19.70	38.5	-18.8	

This report shall not be reproduced except in full, without the written approval of UL Verification Services Inc.

Band

LTE12

5MHz

16QAM

High Frequency Substitution Measurement
UL Verification Services, Inc.

Company: LG
Project #: 15I20527
Date: 4/27/2015
Test Engineer: R.Z
Configuration: EUT Only
Location: Chamber F
Mode: LTE_16QAM Band 12 Fundamentals, 5MHz Bandwidth

Test Equpment:
Receiving: Hybrid T122, and Chamber F SMA Cables
Substitution: Dipole T416, 6ft SMA Cable

f MHz	SG reading (dBm)	Ant. Pol. (H/V)	Cable Loss (dB)	Antenna Gain (dBd)	ERP (dBm)	Limit (dBm)	Delta (dB)	Notes
Low Ch								
701.50	10.50	V	0.9	0.0	9.60	38.5	-28.9	
701.50	18.30	H	0.9	0.0	17.40	38.5	-21.1	
Mid Ch								
707.50	11.30	V	0.9	0.0	10.40	38.5	-28.1	
707.50	18.90	H	0.9	0.0	18.00	38.5	-20.5	
High Ch								
713.50	11.50	V	0.9	0.0	10.60	38.5	-27.9	
713.50	19.40	H	0.9	0.0	18.50	38.5	-20.0	

This report shall not be reproduced except in full, without the written approval of UL Verification Services Inc.

Band

LTE12

5MHz

QPSK

High Frequency Substitution Measurement
UL Verification Services, Inc.

Company: LG
Project #: 15I20527
Date: 4/27/2015
Test Engineer: R.Z
Configuration: EUT Only
Location: Chamber F
Mode: LTE_QPSK Band 12 Fundamentals, 5MHz Bandwidth

Test Equpment:
Receiving: Hybrid T122, and Chamber F SMA Cables
Substitution: Dipole T416, 6ft SMA Cable

f MHz	SG reading (dBm)	Ant. Pol. (H/V)	Cable Loss (dB)	Antenna Gain (dBd)	ERP (dBm)	Limit (dBm)	Delta (dB)	Notes
Low Ch								
701.50	11.70	V	0.9	0.0	10.80	38.5	-27.7	
701.50	19.30	H	0.9	0.0	18.40	38.5	-20.1	
Mid Ch								
707.50	12.35	V	0.9	0.0	11.45	38.5	-27.1	
707.50	20.00	H	0.9	0.0	19.10	38.5	-19.4	
High Ch								
713.50	12.40	V	0.9	0.0	11.50	38.5	-27.0	
713.50	20.30	H	0.9	0.0	19.40	38.5	-19.1	

This report shall not be reproduced except in full, without the written approval of UL Verification Services Inc.

Band

LTE12

3MHz

16QAM

High Frequency Substitution Measurement
UL Verification Services, Inc.

Company: LG
Project #: 15I20527
Date: 4/27/2015
Test Engineer: R.Z
Configuration: EUT Only
Location: Chamber F
Mode: LTE_16QAM Band 12 Fundamentals, 3MHz Bandwidth

Test Equpment:
Receiving: Hybrid T122, and Chamber F SMA Cables
Substitution: Dipole T416, 6ft SMA Cable

f MHz	SG reading (dBm)	Ant. Pol. (H/V)	Cable Loss (dB)	Antenna Gain (dBd)	ERP (dBm)	Limit (dBm)	Delta (dB)	Notes
Low Ch								
700.50	11.28	V	0.9	0.0	10.38	38.5	-28.1	
700.50	19.00	H	0.9	0.0	18.10	38.5	-20.4	
Mid Ch								
707.50	12.15	V	0.9	0.0	11.25	38.5	-27.3	
707.50	19.50	H	0.9	0.0	18.60	38.5	-19.9	
High Ch								
714.50	11.86	V	0.9	0.0	10.96	38.5	-27.5	
714.50	20.30	H	0.9	0.0	19.40	38.5	-19.1	

This report shall not be reproduced except in full, without the written approval of UL Verification Services Inc.

Band

LTE12

3MHz

QPSK

High Frequency Substitution Measurement
UL Verification Services, Inc.

Company: LG
Project #: 15I20527
Date: 4/27/2015
Test Engineer: R.Z
Configuration: EUT Only
Location: Chamber F
Mode: LTE_QPSK Band 12 Fundamentals, 3MHz Bandwidth

Test Equpment:
Receiving: Hybrid T122, and Chamber F SMA Cables
Substitution: Dipole T416, 6ft SMA Cable

f MHz	SG reading (dBm)	Ant. Pol. (H/V)	Cable Loss (dB)	Antenna Gain (dBd)	ERP (dBm)	Limit (dBm)	Delta (dB)	Notes
Low Ch								
700.50	11.60	V	0.9	0.0	10.70	38.5	-27.8	
700.50	19.52	H	0.9	0.0	18.62	38.5	-19.9	
Mid Ch								
707.50	12.62	V	0.9	0.0	11.72	38.5	-26.8	
707.50	20.30	H	0.9	0.0	19.40	38.5	-19.1	
High Ch								
714.50	12.67	V	0.9	0.0	11.77	38.5	-26.7	
714.50	20.60	H	0.9	0.0	19.70	38.5	-18.8	

This report shall not be reproduced except in full, without the written approval of UL Verification Services Inc.

Band

LTE12

1.4MHz

16QAM

High Frequency Substitution Measurement
UL Verification Services, Inc.

Company: LG
Project #: 15I20527
Date: 4/27/2015
Test Engineer: R.Z
Configuration: EUT Only
Location: Chamber F
Mode: LTE_16QAM Band 12 Fundamentals, 1.4MHz Bandwidth

Test Equpment:
Receiving: Hybrid T122, and Chamber F SMA Cables
Substitution: Dipole T416, 6ft SMA Cable

f MHz	SG reading (dBm)	Ant. Pol. (H/V)	Cable Loss (dB)	Antenna Gain (dBd)	ERP (dBm)	Limit (dBm)	Delta (dB)	Notes
Low Ch								
699.70	11.00	V	0.9	0.0	10.10	38.5	-28.4	
699.70	18.70	H	0.9	0.0	17.80	38.5	-20.7	
Mid Ch								
707.50	12.20	V	0.9	0.0	11.30	38.5	-27.2	
707.50	19.35	H	0.9	0.0	18.45	38.5	-20.1	
High Ch								
715.30	12.60	V	0.9	0.0	11.70	38.5	-26.8	
715.30	20.13	H	0.9	0.0	19.23	38.5	-19.3	

This report shall not be reproduced except in full, without the written approval of UL Verification Services Inc.

Band

LTE12

1.4MHz

QPSK

High Frequency Substitution Measurement
UL Verification Services, Inc.

Company: LG
Project #: 15I20527
Date: 4/27/2015
Test Engineer: R.Z
Configuration: EUT Only
Location: Chamber F
Mode: LTE_QPSK Band 12 Fundamentals, 1.4MHz Bandwidth

Test Equpment:
Receiving: Hybrid T122, and Chamber F SMA Cables
Substitution: Dipole T416, 6ft SMA Cable

f MHz	SG reading (dBm)	Ant. Pol. (H/V)	Cable Loss (dB)	Antenna Gain (dBd)	ERP (dBm)	Limit (dBm)	Delta (dB)	Notes
Low Ch								
699.70	11.50	V	0.9	0.0	10.60	38.5	-27.9	
699.70	19.00	H	0.9	0.0	18.10	38.5	-20.4	
Mid Ch								
707.50	12.70	V	0.9	0.0	11.80	38.5	-26.7	
707.50	19.96	H	0.9	0.0	19.06	38.5	-19.4	
High Ch								
715.30	12.96	V	0.9	0.0	12.06	38.5	-26.4	
715.30	20.46	H	0.9	0.0	19.56	38.5	-18.9	

This report shall not be reproduced except in full, without the written approval of UL Verification Services Inc.

LTE Band 25

Band

LTE25

20MHz

16QAM

High Frequency Substitution Measurement
UL Verification Services, Inc.

Company: LG
Project #: 15I20527
Date: 4/23/2015
Test Engineer: R.Z
Configuration: EUT Only
Location: Chamber G
Mode: LTE_16QAM Band 25 Fundamentals, 20MHz Bandwidth

Test Equpment:
Receiving: Horn T711, and Chamber G SMA Cables
Substitution: Horn T59, 6ft SMA Cable

f MHz	SG reading (dBm)	Ant. Pol. (H/V)	Cable Loss (dB)	Antenna Gain (dBi)	EIRP (dBm)	Limit (dBm)	Delta (dB)	Notes
Low Ch								
1860.00	14.90	V	0.9	9.2	23.20	33.0	-9.8	
1860.00	15.56	H	0.9	9.2	23.86	33.0	-9.1	
Mid Ch								
1882.50	15.16	V	0.9	9.2	23.46	33.0	-9.5	
1882.50	15.90	H	0.9	9.2	24.20	33.0	-8.8	
High Ch								
1905.00	14.08	V	0.9	9.1	22.28	33.0	-10.7	
1905.00	17.04	H	0.9	9.1	25.24	33.0	-7.8	

This report shall not be reproduced except in full, without the written approval of UL Verification Services Inc.

Band

LTE25

20MHz

QPSK

High Frequency Substitution Measurement
UL Verification Services, Inc.

Company: LG
Project #: 15I20527
Date: 4/23/2015
Test Engineer: R.Z
Configuration: EUT Only
Location: Chamber G
Mode: LTE_QPSK Band 25 Fundamentals, 20MHz Bandwidth

Test Equpment:
Receiving: Horn T711, and Chamber G SMA Cables
Substitution: Horn T59, 6ft SMA Cable

f MHz	SG reading (dBm)	Ant. Pol. (H/V)	Cable Loss (dB)	Antenna Gain (dBi)	EIRP (dBm)	Limit (dBm)	Delta (dB)	Notes
Low Ch								
1860.00	15.60	V	0.9	9.2	23.90	33.0	-9.1	
1860.00	16.10	H	0.9	9.2	24.40	33.0	-8.6	
Mid Ch								
1882.50	15.72	V	0.9	9.2	24.02	33.0	-9.0	
1882.50	16.88	H	0.9	9.2	25.18	33.0	-7.8	
High Ch								
1905.00	15.18	V	0.9	9.1	23.38	33.0	-9.6	
1905.00	17.70	H	0.9	9.1	25.90	33.0	-7.1	

This report shall not be reproduced except in full, without the written approval of UL Verification Services Inc.

Band

LTE25

15MHz

16QAM

High Frequency Substitution Measurement
UL Verification Services, Inc.

Company: LG
Project #: 15I20527
Date: 4/22/2015
Test Engineer: R.Z
Configuration: EUT Only
Location: Chamber G
Mode: LTE_16QAM Band 25 Fundamentals, 15MHz Bandwidth

Test Equpment:
Receiving: Horn T711, and Chamber G SMA Cables
Substitution: Horn T59, 6ft SMA Cable

f MHz	SG reading (dBm)	Ant. Pol. (H/V)	Cable Loss (dB)	Antenna Gain (dBi)	EIRP (dBm)	Limit (dBm)	Delta (dB)	Notes
Low Ch								
1857.50	12.90	V	0.9	9.2	21.20	33.0	-11.8	
1857.50	15.10	H	0.9	9.2	23.40	33.0	-9.6	
Mid Ch								
1882.50	15.58	V	0.9	9.2	23.88	33.0	-9.1	
1882.50	17.70	H	0.9	9.2	26.00	33.0	-7.0	
High Ch								
1907.50	15.40	V	0.9	9.1	23.60	33.0	-9.4	
1907.50	17.53	H	0.9	9.1	25.73	33.0	-7.3	

This report shall not be reproduced except in full, without the written approval of UL Verification Services Inc.

Band

LTE25

15MHz

QPSK

High Frequency Substitution Measurement
UL Verification Services, Inc.

Company: LG
Project #: 15I20527
Date: 4/22/2015
Test Engineer: R.Z
Configuration: EUT Only
Location: Chamber G
Mode: LTE_QPSK Band 25 Fundamentals, 15MHz Bandwidth

Test Equpment:
Receiving: Horn T711, and Chamber G SMA Cables
Substitution: Horn T59, 6ft SMA Cable

f MHz	SG reading (dBm)	Ant. Pol. (H/V)	Cable Loss (dB)	Antenna Gain (dBi)	EIRP (dBm)	Limit (dBm)	Delta (dB)	Notes
Low Ch								
1857.50	14.40	V	0.9	9.2	22.70	33.0	-10.3	
1857.50	15.87	H	0.9	9.2	24.17	33.0	-8.8	
Mid Ch								
1882.50	15.95	V	0.9	9.2	24.25	33.0	-8.8	
1882.50	18.20	H	0.9	9.2	26.50	33.0	-6.5	
High Ch								
1907.50	16.10	V	0.9	9.1	24.30	33.0	-8.7	
1907.50	17.90	H	0.9	9.1	26.10	33.0	-6.9	

This report shall not be reproduced except in full, without the written approval of UL Verification Services Inc.

Band

LTE25

10MHz

16QAM

High Frequency Substitution Measurement
UL Verification Services, Inc.

Company: LG
Project #: 15I20527
Date: 4/22/2015
Test Engineer: R.Z
Configuration: EUT Only
Location: Chamber G
Mode: LTE_16QAM Band 25 Fundamentals, 10MHz Bandwidth

Test Equpment:
Receiving: Horn T711, and Chamber G SMA Cables
Substitution: Horn T59, 6ft SMA Cable

f MHz	SG reading (dBm)	Ant. Pol. (H/V)	Cable Loss (dB)	Antenna Gain (dBi)	EIRP (dBm)	Limit (dBm)	Delta (dB)	Notes
Low Ch								
1855.00	13.78	V	0.9	9.2	22.08	33.0	-10.9	
1855.00	15.30	H	0.9	9.2	23.60	33.0	-9.4	
Mid Ch								
1882.50	15.70	V	0.9	9.2	24.00	33.0	-9.0	
1882.50	17.10	H	0.9	9.2	25.40	33.0	-7.6	
High Ch								
1910.00	15.10	V	0.9	9.1	23.30	33.0	-9.7	
1910.00	16.50	H	0.9	9.1	24.70	33.0	-8.3	

This report shall not be reproduced except in full, without the written approval of UL Verification Services Inc.

Band

LTE25

10MHz

QPSK

High Frequency Substitution Measurement
UL Verification Services, Inc.

Company: LG
Project #: 15I20527
Date: 4/22/2015
Test Engineer: R.Z
Configuration: EUT Only
Location: Chamber G
Mode: LTE_QPSK Band 25 Fundamentals, 10MHz Bandwidth

Test Equpment:
Receiving: Horn T711, and Chamber G SMA Cables
Substitution: Horn T59, 6ft SMA Cable

f MHz	SG reading (dBm)	Ant. Pol. (H/V)	Cable Loss (dB)	Antenna Gain (dBi)	EIRP (dBm)	Limit (dBm)	Delta (dB)	Notes
Low Ch								
1855.00	14.40	V	0.9	9.2	22.70	33.0	-10.3	
1855.00	15.70	H	0.9	9.2	24.00	33.0	-9.0	
Mid Ch								
1882.50	16.40	V	0.9	9.2	24.70	33.0	-8.3	
1882.50	17.70	H	0.9	9.2	26.00	33.0	-7.0	
High Ch								
1910.00	15.90	V	0.9	9.1	24.10	33.0	-8.9	
1910.00	17.00	H	0.9	9.1	25.20	33.0	-7.8	

This report shall not be reproduced except in full, without the written approval of UL Verification Services Inc.

Band

LTE25

5MHz

16QAM

High Frequency Substitution Measurement
UL Verification Services, Inc.

Company: LG
Project #: 15I20527
Date: 4/23/2015
Test Engineer: R.Z
Configuration: EUT Only
Location: Chamber G
Mode: LTE_16QAM Band 25 Fundamentals, 5MHz Bandwidth

Test Equpment:
Receiving: Horn T711, and Chamber G SMA Cables
Substitution: Horn T59, 6ft SMA Cable

f MHz	SG reading (dBm)	Ant. Pol. (H/V)	Cable Loss (dB)	Antenna Gain (dBi)	EIRP (dBm)	Limit (dBm)	Delta (dB)	Notes
Low Ch								
1852.50	13.20	V	0.9	9.2	21.50	33.0	-11.5	
1852.50	14.00	H	0.9	9.2	22.30	33.0	-10.7	
Mid Ch								
1882.50	15.50	V	0.9	9.2	23.80	33.0	-9.2	
1882.50	16.90	H	0.9	9.2	25.20	33.0	-7.8	
High Ch								
1912.50	16.20	V	0.9	9.1	24.40	33.0	-8.6	
1912.50	15.60	H	0.9	9.1	23.80	33.0	-9.2	

This report shall not be reproduced except in full, without the written approval of UL Verification Services Inc.

Band

LTE25

5MHz

QPSK

High Frequency Substitution Measurement
UL Verification Services, Inc.

Company: LG
Project #: 15I20527
Date: 4/23/2015
Test Engineer: R.Z
Configuration: EUT Only
Location: Chamber G
Mode: LTE_QPSK Band 25 Fundamentals, 5MHz Bandwidth

Test Equpment:
Receiving: Horn T711, and Chamber G SMA Cables
Substitution: Horn T59, 6ft SMA Cable

f MHz	SG reading (dBm)	Ant. Pol. (H/V)	Cable Loss (dB)	Antenna Gain (dBi)	EIRP (dBm)	Limit (dBm)	Delta (dB)	Notes
Low Ch								
1852.50	14.00	V	0.9	9.2	22.30	33.0	-10.7	
1852.50	14.70	H	0.9	9.2	23.00	33.0	-10.0	
Mid Ch								
1882.50	16.30	V	0.9	9.2	24.60	33.0	-8.4	
1882.50	17.50	H	0.9	9.2	25.80	33.0	-7.2	
High Ch								
1912.50	16.00	V	0.9	9.1	24.20	33.0	-8.8	
1912.50	16.64	H	0.9	9.1	24.84	33.0	-8.2	

This report shall not be reproduced except in full, without the written approval of UL Verification Services Inc.

Band

LTE25

3MHz

16QAM

High Frequency Substitution Measurement
UL Verification Services, Inc.

Company: LG
Project #: 15I20527
Date: 4/22/2015
Test Engineer: R.Z
Configuration: EUT Only
Location: Chamber G
Mode: LTE_16QAM Band 25 Fundamentals, 3MHz Bandwidth

Test Equpment:
Receiving: Horn T711, and Chamber G SMA Cables
Substitution: Horn T59, 6ft SMA Cable

f MHz	SG reading (dBm)	Ant. Pol. (H/V)	Cable Loss (dB)	Antenna Gain (dBi)	EIRP (dBm)	Limit (dBm)	Delta (dB)	Notes
Low Ch								
1851.50	12.10	V	0.9	9.2	20.40	33.0	-12.6	-26.5
1851.50	13.20	H	0.9	9.2	21.50	33.0	-11.5	-25.0
Mid Ch								
1882.50	16.10	V	0.9	9.2	24.40	33.0	-8.6	-23.3
1882.50	17.20	H	0.9	9.2	25.50	33.0	-7.5	-22.0
High Ch								
1913.50	16.10	V	0.9	9.1	24.30	33.0	-8.7	-23.9
1913.50	17.10	H	0.9	9.1	25.30	33.0	-7.7	-22.4

This report shall not be reproduced except in full, without the written approval of UL Verification Services Inc.

Band

LTE25

3MHz

QPSK

High Frequency Substitution Measurement
UL Verification Services, Inc.

Company: LG
Project #: 15I20527
Date: 4/22/2015
Test Engineer: R.Z
Configuration: EUT Only
Location: Chamber G
Mode: LTE_QPSK Band 25 Fundamentals, 3MHz Bandwidth

Test Equpment:
Receiving: Horn T711, and Chamber G SMA Cables
Substitution: Horn T59, 6ft SMA Cable

f MHz	SG reading (dBm)	Ant. Pol. (H/V)	Cable Loss (dB)	Antenna Gain (dBi)	EIRP (dBm)	Limit (dBm)	Delta (dB)	Notes
Low Ch								
1851.50	13.00	V	0.9	9.2	21.30	33.0	-11.7	
1851.50	14.20	H	0.9	9.2	22.50	33.0	-10.5	
Mid Ch								
1882.50	16.40	V	0.9	9.2	24.70	33.0	-8.3	
1882.50	17.70	H	0.9	9.2	26.00	33.0	-7.0	
High Ch								
1913.50	16.60	V	0.9	9.1	24.80	33.0	-8.2	
1913.50	17.50	H	0.9	9.1	25.70	33.0	-7.3	

This report shall not be reproduced except in full, without the written approval of UL Verification Services Inc.

Band

LTE25

1.4MHz

16QAM

High Frequency Substitution Measurement
UL Verification Services, Inc.

Company: LG
Project #: 15I20527
Date: 4/23/2015
Test Engineer: R.Z
Configuration: EUT Only
Location: Chamber G
Mode: LTE_16QAM Band 25 Fundamentals, 1.4MHz Bandwidth

Test Equpment:
Receiving: Horn T711, and Chamber G SMA Cables
Substitution: Horn T59, 6ft SMA Cable

f MHz	SG reading (dBm)	Ant. Pol. (H/V)	Cable Loss (dB)	Antenna Gain (dBi)	EIRP (dBm)	Limit (dBm)	Delta (dB)	Notes
Low Ch								
1850.70	13.90	V	0.9	9.2	22.20	33.0	-10.8	
1850.70	14.73	H	0.9	9.2	23.03	33.0	-10.0	
Mid Ch								
1882.50	15.40	V	0.9	9.2	23.70	33.0	-9.3	
1882.50	17.30	H	0.9	9.2	25.60	33.0	-7.4	
High Ch								
1914.30	15.60	V	0.9	9.1	23.80	33.0	-9.2	
1914.30	16.80	H	0.9	9.1	25.00	33.0	-8.0	

This report shall not be reproduced except in full, without the written approval of UL Verification Services Inc.

Band

LTE25

1.4MHz

QPSK

High Frequency Substitution Measurement
UL Verification Services, Inc.

Company: LG
Project #: 15I20527
Date: 4/23/2015
Test Engineer: R.Z
Configuration: EUT Only
Location: Chamber G
Mode: LTE_QPSK Band 25 Fundamentals, 1.4MHz Bandwidth

Test Equipment:
Receiving: Horn T711, and Chamber G SMA Cables
Substitution: Horn T59, 6ft SMA Cable

f MHz	SG reading (dBm)	Ant. Pol. (H/V)	Cable Loss (dB)	Antenna Gain (dBi)	EIRP (dBm)	Limit (dBm)	Delta (dB)	Notes
Low Ch								
1850.70	14.80	V	0.9	9.2	23.14	33.0	-9.9	
1850.70	15.80	H	0.9	9.2	24.14	33.0	-8.9	
Mid Ch								
1882.50	16.30	V	0.9	9.2	24.55	33.0	-8.5	
1882.50	17.75	H	0.9	9.2	26.00	33.0	-7.0	
High Ch								
1914.30	16.50	V	0.9	9.1	24.67	33.0	-8.3	
1914.30	17.30	H	0.9	9.1	25.47	33.0	-7.5	

This report shall not be reproduced except in full, without the written approval of UL Verification Services Inc.

LTE Band 26

Band

LTE26

15MHz

16QAM

High Frequency Substitution Measurement
UL Verification Services, Inc.

Company: LG Electronics
Project #: 15I20527
Date: 4/27/2015
Test Engineer: R.Z
Configuration: EUT Only
Location: Chamber F
Mode: LTE_16QAM Band 26 Fundamentals, 15MHz Bandwidth

Test Equpment:
Receiving: Hybrid T122, and Chamber F SMA Cables
Substitution: Dipole T416, 6ft SMA Cable Warehouse

f MHz	SG reading (dBm)	Ant. Pol. (H/V)	Cable Loss (dB)	Antenna Gain (dBd)	ERP (dBm)	Limit (dBm)	Delta (dB)	Notes
Low Ch								
831.50	15.46	V	0.9	0.0	14.56	38.5	-23.9	
831.50	22.10	H	0.9	0.0	21.20	38.5	-17.3	
Mid Ch								
836.50	16.06	V	0.9	0.0	15.16	38.5	-23.3	
836.50	22.44	H	0.9	0.0	21.54	38.5	-17.0	
High Ch								
841.50	16.32	V	0.9	0.0	15.42	38.5	-23.1	
841.50	22.18	H	0.9	0.0	21.28	38.5	-17.2	

This report shall not be reproduced except in full, without the written approval of UL Verification Services Inc.

Band

LTE26

15MHz

QPSK

High Frequency Substitution Measurement
UL Verification Services, Inc.

Company: LG Electronics
Project #: 15I20527
Date: 4/27/2015
Test Engineer: R.Z
Configuration: EUT Only
Location: Chamber F
Mode: LTE_QPSK Band 26 Fundamentals, 15MHz Bandwidth

Test Equipment:
Receiving: Hybrid T122, and Chamber F SMA Cables
Substitution: Dipole T416, 6ft SMA Cable Warehouse

f MHz	SG reading (dBm)	Ant. Pol. (H/V)	Cable Loss (dB)	Antenna Gain (dBd)	ERP (dBm)	Limit (dBm)	Delta (dB)	Notes
Low Ch								
831.50	16.70	V	0.9	0.0	15.80	38.5	-22.7	
831.50	22.60	H	0.9	0.0	21.70	38.5	-16.8	
Mid Ch								
836.50	16.50	V	0.9	0.0	15.60	38.5	-22.9	
836.50	22.84	H	0.9	0.0	21.94	38.5	-16.6	
High Ch								
841.50	17.24	V	0.9	0.0	16.34	38.5	-22.2	
841.50	22.57	H	0.9	0.0	21.67	38.5	-16.8	

This report shall not be reproduced except in full, without the written approval of UL Verification Services Inc.

Band

LTE26

10MHz

16QAM

High Frequency Substitution Measurement
UL Verification Services, Inc.

Company: LG Electronics
Project #: 15I20527
Date: 4/27/2015
Test Engineer: R.Z
Configuration: EUT Only
Location: Chamber F
Mode: LTE_16QAM Band 26 Fundamentals, 10MHz Bandwidth

Test Equpment:
Receiving: Hybrid T122, and Chamber F SMA Cables
Substitution: Dipole T416, 6ft SMA Cable Warehouse

f MHz	SG reading (dBm)	Ant. Pol. (H/V)	Cable Loss (dB)	Antenna Gain (dBd)	ERP (dBm)	Limit (dBm)	Delta (dB)	Notes
Low Ch								
819.00	16.50	V	0.9	0.0	15.60	50.0	-34.4	
819.00	21.80	H	0.9	0.0	20.90	50.0	-29.1	
Mid Ch								
831.50	15.50	V	0.9	0.0	14.60	38.5	-23.9	
831.50	21.94	H	0.9	0.0	21.04	38.5	-17.5	
High Ch								
844.00	16.22	V	0.9	0.0	15.32	38.5	-23.2	
844.00	22.10	H	0.9	0.0	21.20	38.5	-17.3	

This report shall not be reproduced except in full, without the written approval of UL Verification Services Inc.

Band

LTE26

10MHz

QPSK

High Frequency Substitution Measurement
UL Verification Services, Inc.

Company: LG Electronics
Project #: 15I20527
Date: 4/27/2015
Test Engineer: R.Z
Configuration: EUT Only
Location: Chamber F
Mode: LTE_QPSK Band 26 Fundamentals, 10MHz Bandwidth

Test Equpment:
Receiving: Hybrid T122, and Chamber F SMA Cables
Substitution: Dipole T416, 6ft SMA Cable Warehouse

f MHz	SG reading (dBm)	Ant. Pol. (H/V)	Cable Loss (dB)	Antenna Gain (dBd)	ERP (dBm)	Limit (dBm)	Delta (dB)	Notes
Low Ch								
819.00	17.40	V	0.9	0.0	16.50	50.0	-33.5	
819.00	22.60	H	0.9	0.0	21.70	50.0	-28.3	
Mid Ch								
831.50	16.40	V	0.9	0.0	15.50	38.5	-23.0	
831.50	22.58	H	0.9	0.0	21.68	38.5	-16.8	
High Ch								
844.00	17.12	V	0.9	0.0	16.22	38.5	-22.3	
844.00	22.70	H	0.9	0.0	21.80	38.5	-16.7	

This report shall not be reproduced except in full, without the written approval of UL Verification Services Inc.

Band

LTE26

5MHz

16QAM

High Frequency Substitution Measurement
UL Verification Services, Inc.

Company: LG Electronics
Project #: 15I20527
Date: 4/27/2015
Test Engineer: R.Z
Configuration: EUT Only
Location: Chamber F
Mode: LTE_16QAM Band 26 Fundamentals, 5MHz Bandwidth

Test Equpment:
Receiving: Hybrid T122, and Chamber F SMA Cables
Substitution: Dipole T416, 6ft SMA Cable Warehouse

f MHz	SG reading (dBm)	Ant. Pol. (H/V)	Cable Loss (dB)	Antenna Gain (dBd)	ERP (dBm)	Limit (dBm)	Delta (dB)	Notes
Low Ch								
816.50	15.30	V	0.9	0.0	14.40	50.0	-35.6	
816.50	21.30	H	0.9	0.0	20.40	50.0	-29.6	
Mid Ch								
831.50	15.24	V	0.9	0.0	14.34	38.5	-24.2	
831.50	21.34	H	0.9	0.0	20.44	38.5	-18.1	
High Ch								
846.50	15.58	V	0.9	0.0	14.68	38.5	-23.8	
846.50	21.84	H	0.9	0.0	20.94	38.5	-17.6	

This report shall not be reproduced except in full, without the written approval of UL Verification Services Inc.

Band

LTE26

5MHz

QPSK

High Frequency Substitution Measurement
UL Verification Services, Inc.

Company: LG Electronics
Project #: 15I20527
Date: 4/27/2015
Test Engineer: R.Z
Configuration: EUT Only
Location: Chamber F
Mode: LTE_QPSK Band 26 Fundamentals, 5MHz Bandwidth

Test Equpment:
Receiving: Hybrid T122, and Chamber F SMA Cables
Substitution: Dipole T416, 6ft SMA Cable Warehouse

f MHz	SG reading (dBm)	Ant. Pol. (H/V)	Cable Loss (dB)	Antenna Gain (dBd)	ERP (dBm)	Limit (dBm)	Delta (dB)	Notes
Low Ch								
816.50	16.40	V	0.9	0.0	15.50	50.0	-34.5	
816.50	22.20	H	0.9	0.0	21.30	50.0	-28.7	
Mid Ch								
831.50	16.40	V	0.9	0.0	15.50	38.5	-23.0	
831.50	22.34	H	0.9	0.0	21.44	38.5	-17.1	
High Ch								
846.50	16.59	V	0.9	0.0	15.69	38.5	-22.8	
846.50	22.84	H	0.9	0.0	21.94	38.5	-16.6	

This report shall not be reproduced except in full, without the written approval of UL Verification Services Inc.

Band

LTE26

3MHz

16QAM

High Frequency Substitution Measurement
UL Verification Services, Inc.

Company: LG Electronics
Project #: 15I20527
Date: 4/27/2015
Test Engineer: R.Z
Configuration: EUT Only
Location: Chamber F
Mode: LTE_16QAM Band 26 Fundamentals, 3MHz Bandwidth

Test Equpment:
Receiving: Hybrid T122, and Chamber F SMA Cables
Substitution: Dipole T416, 6ft SMA Cable Warehouse

f MHz	SG reading (dBm)	Ant. Pol. (H/V)	Cable Loss (dB)	Antenna Gain (dBd)	ERP (dBm)	Limit (dBm)	Delta (dB)	Notes
Low Ch								
815.50	16.42	V	0.9	0.0	15.52	50.0	-34.5	
815.50	21.90	H	0.9	0.0	21.00	50.0	-29.0	
Mid Ch								
831.50	15.50	V	0.9	0.0	14.60	38.5	-23.9	
831.50	22.24	H	0.9	0.0	21.34	38.5	-17.2	
High Ch								
847.50	15.72	V	0.9	0.0	14.82	38.5	-23.7	
847.50	22.83	H	0.9	0.0	21.93	38.5	-16.6	

This report shall not be reproduced except in full, without the written approval of UL Verification Services Inc.

Band

LTE26

3MHz

QPSK

High Frequency Substitution Measurement
UL Verification Services, Inc.

Company: LG Electronics
Project #: 15I20527
Date: 4/27/2015
Test Engineer: R.Z
Configuration: EUT Only
Location: Chamber F
Mode: LTE_QPSK Band 26 Fundamentals, 3MHz Bandwidth

Test Equpment:
Receiving: Hybrid T122, and Chamber F SMA Cables
Substitution: Dipole T416, 6ft SMA Cable Warehouse

f MHz	SG reading (dBm)	Ant. Pol. (H/V)	Cable Loss (dB)	Antenna Gain (dBd)	ERP (dBm)	Limit (dBm)	Delta (dB)	Notes
Low Ch								
815.50	16.60	V	0.9	0.0	15.70	50.0	-34.3	
815.50	22.30	H	0.9	0.0	21.40	50.0	-28.6	
Mid Ch								
831.50	16.50	V	0.9	0.0	15.60	38.5	-22.9	
831.50	22.71	H	0.9	0.0	21.81	38.5	-16.7	
High Ch								
847.50	16.72	V	0.9	0.0	15.82	38.5	-22.7	
847.50	23.25	H	0.9	0.0	22.35	38.5	-16.2	

This report shall not be reproduced except in full, without the written approval of UL Verification Services Inc.

Band

LTE26

1.4MHz

16QAM

High Frequency Substitution Measurement
UL Verification Services, Inc.

Company: LG Electronics
Project #: 15I20527
Date: 4/27/2015
Test Engineer: R.Z
Configuration: EUT Only
Location: Chamber F
Mode: LTE_16QAM Band 26 Fundamentals, 1.4MHz Bandwidth

Test Equpment:
Receiving: Hybrid T122, and Chamber F SMA Cables
Substitution: Dipole T416, 6ft SMA Cable Warehouse

f MHz	SG reading (dBm)	Ant. Pol. (H/V)	Cable Loss (dB)	Antenna Gain (dBd)	ERP (dBm)	Limit (dBm)	Delta (dB)	Notes
Low Ch								
814.70	16.50	V	0.9	0.0	15.60	50.0	-34.4	
814.70	21.90	H	0.9	0.0	21.00	50.0	-29.0	
Mid Ch								
831.50	15.90	V	0.9	0.0	15.00	38.5	-23.5	
831.50	22.24	H	0.9	0.0	21.34	38.5	-17.2	
High Ch								
848.30	15.72	V	0.9	0.0	14.82	38.5	-23.7	
848.30	22.30	H	0.9	0.0	21.40	38.5	-17.1	

This report shall not be reproduced except in full, without the written approval of UL Verification Services Inc.

Band

LTE26

1.4MHz

QPSK

High Frequency Substitution Measurement
UL Verification Services, Inc.

Company: LG Electronics
Project #: 15I20527
Date: 4/27/2015
Test Engineer: R.Z
Configuration: EUT Only
Location: Chamber F
Mode: LTE_QPSK Band 26 Fundamentals, 1.4MHz Bandwidth

Test Equpment:
Receiving: Hybrid T122, and Chamber F SMA Cables
Substitution: Dipole T416, 6ft SMA Cable Warehouse

f MHz	SG reading (dBm)	Ant. Pol. (H/V)	Cable Loss (dB)	Antenna Gain (dBd)	ERP (dBm)	Limit (dBm)	Delta (dB)	Notes
Low Ch								
814.70	16.90	V	0.9	0.0	16.00	50.0	-34.0	
814.70	22.10	H	0.9	0.0	21.20	50.0	-28.8	
Mid Ch								
831.50	16.30	V	0.9	0.0	15.40	38.5	-23.1	
831.50	22.34	H	0.9	0.0	21.44	38.5	-17.1	
High Ch								
848.30	16.22	V	0.9	0.0	15.32	38.5	-23.2	
848.30	22.70	H	0.9	0.0	21.80	38.5	-16.7	

This report shall not be reproduced except in full, without the written approval of UL Verification Services Inc.

LTE Band 41

Band

LTE41

20MHz

16QAM

High Frequency Substitution Measurement
UL Verification Services, Inc.

Company: LG Electronics
Project #: 15I20527
Date: 4/23/2015
Test Engineer: R.Z
Configuration: EUT ONLY
Location: Chamber F
Mode: LTE_16QAM Band 41 Fundamentals, 20MHz Bandwidth

Test Equpment:
Receiving: Horn T120, and Chamber F SMA Cables
Substitution: Horn T60, 6ft SMA Cable

f MHz	SG reading (dBm)	Ant. Pol. (H/V)	Cable Loss (dB)	Antenna Gain (dBi)	EIRP (dBm)	Limit (dBm)	Delta (dB)	Notes
Low Ch								
2506.00	14.90	V	0.9	9.5	23.48	33.0	-9.5	
2506.00	15.30	H	0.9	9.5	23.88	33.0	-9.1	
Mid Ch								
2593.00	16.20	V	0.9	9.5	24.81	33.0	-8.2	
2593.00	16.50	H	0.9	9.5	25.11	33.0	-7.9	
High Ch								
2680.00	14.40	V	0.9	9.7	23.23	33.0	-9.8	
2680.00	15.40	H	0.9	9.7	24.23	33.0	-8.8	

This report shall not be reproduced except in full, without the written approval of UL Verification Services Inc.

Band

LTE41

20MHz

QPSK

High Frequency Substitution Measurement
UL Verification Services, Inc.

Company: LG Electronics
Project #: 15I20527
Date: 4/23/2015
Test Engineer: R.Z
Configuration: EUT ONLY
Location: Chamber F
Mode: LTE_QPSK Band 41 Fundamentals, 20MHz Bandwidth

Test Equpment:
Receiving: Horn T120, and Chamber F SMA Cables
Substitution: Horn T60, 6ft SMA Cable

f MHz	SG reading (dBm)	Ant. Pol. (H/V)	Cable Loss (dB)	Antenna Gain (dBi)	EIRP (dBm)	Limit (dBm)	Delta (dB)	Notes
Low Ch								
2506.00	15.40	V	0.9	9.5	23.98	33.0	-9.0	
2506.00	15.80	H	0.9	9.5	24.38	33.0	-8.6	
Mid Ch								
2593.00	16.70	V	0.9	9.5	25.31	33.0	-7.7	
2593.00	17.00	H	0.9	9.5	25.61	33.0	-7.4	
High Ch								
2680.00	14.90	V	0.9	9.7	23.73	33.0	-9.3	
2680.00	15.80	H	0.9	9.7	24.63	33.0	-8.4	

This report shall not be reproduced except in full, without the written approval of UL Verification Services Inc.

Band

LTE41

15MHz

16QAM

High Frequency Substitution Measurement
UL Verification Services, Inc.

Company: LG Electronics
Project #: 15I20527
Date: 4/23/2015
Test Engineer: R.Z
Configuration: EUT ONLY
Location: Chamber F
Mode: LTE_16QAM Band 41 Fundamentals, 15MHz Bandwidth

Test Equpment:
Receiving: Horn T120, and Chamber F SMA Cables
Substitution: Horn T60, 6ft SMA Cable

f MHz	SG reading (dBm)	Ant. Pol. (H/V)	Cable Loss (dB)	Antenna Gain (dBi)	EIRP (dBm)	Limit (dBm)	Delta (dB)	Notes
Low Ch								
2503.50	14.90	V	0.9	9.5	23.48	33.0	-9.5	
2503.50	15.30	H	0.9	9.5	23.88	33.0	-9.1	
Mid Ch								
2593.00	15.90	V	0.9	9.5	24.51	33.0	-8.5	
2593.00	16.40	H	0.9	9.5	25.01	33.0	-8.0	
High Ch								
2682.50	13.90	V	0.9	9.7	22.73	33.0	-10.3	
2682.50	14.60	H	0.9	9.7	23.43	33.0	-9.6	

This report shall not be reproduced except in full, without the written approval of UL Verification Services Inc.

Band

LTE41

15MHz

QPSK

High Frequency Substitution Measurement
UL Verification Services, Inc.

Company: LG Electronics
Project #: 15I20527
Date: 4/23/2015
Test Engineer: R.Z
Configuration: EUT ONLY
Location: Chamber F
Mode: LTE_QPSK Band 41 Fundamentals, 15MHz Bandwidth

Test Equpment:
Receiving: Horn T120, and Chamber F SMA Cables
Substitution: Horn T60, 6ft SMA Cable

f MHz	SG reading (dBm)	Ant. Pol. (H/V)	Cable Loss (dB)	Antenna Gain (dBi)	EIRP (dBm)	Limit (dBm)	Delta (dB)	Notes
Low Ch								
2503.50	15.40	V	0.9	9.5	23.98	33.0	-9.0	
2503.50	15.70	H	0.9	9.5	24.28	33.0	-8.7	
Mid Ch								
2593.00	16.50	V	0.9	9.5	25.11	33.0	-7.9	
2593.00	16.90	H	0.9	9.5	25.51	33.0	-7.5	
High Ch								
2682.50	14.20	V	0.9	9.7	23.03	33.0	-10.0	
2682.50	15.00	H	0.9	9.7	23.83	33.0	-9.2	

This report shall not be reproduced except in full, without the written approval of UL Verification Services Inc.

Band

LTE41

10MHz

16QAM

High Frequency Substitution Measurement
UL Verification Services, Inc.

Company: LG Electronics
Project #: 15I20527
Date: 4/23/2015
Test Engineer: R.Z
Configuration: EUT ONLY
Location: Chamber F
Mode: LTE_16QAM Band 41 Fundamentals, 10MHz Bandwidth

Test Equpment:
Receiving: Horn T120, and Chamber F SMA Cables
Substitution: Horn T60, 6ft SMA Cable

f MHz	SG reading (dBm)	Ant. Pol. (H/V)	Cable Loss (dB)	Antenna Gain (dBi)	EIRP (dBm)	Limit (dBm)	Delta (dB)	Notes
Low Ch								
2501.00	14.74	V	0.9	9.5	23.32	33.0	-9.7	
2501.00	15.70	H	0.9	9.5	24.28	33.0	-8.7	
Mid Ch								
2593.00	15.97	V	0.9	9.5	24.58	33.0	-8.4	
2593.00	17.09	H	0.9	9.5	25.70	33.0	-7.3	
High Ch								
2685.00	14.57	V	0.9	9.7	23.41	33.0	-9.6	
2685.00	15.46	H	0.9	9.7	24.30	33.0	-8.7	

This report shall not be reproduced except in full, without the written approval of UL Verification Services Inc.

Band

LTE41

10MHz

QPSK

High Frequency Substitution Measurement
UL Verification Services, Inc.

Company: LG Electronics
Project #: 15I20527
Date: 4/23/2015
Test Engineer: R.Z
Configuration: EUT ONLY
Location: Chamber F
Mode: LTE_QPSK Band 41 Fundamentals, 10MHz Bandwidth

Test Equpment:
Receiving: Horn T120, and Chamber F SMA Cables
Substitution: Horn T60, 6ft SMA Cable

f MHz	SG reading (dBm)	Ant. Pol. (H/V)	Cable Loss (dB)	Antenna Gain (dBi)	EIRP (dBm)	Limit (dBm)	Delta (dB)	Notes
Low Ch								
2501.00	15.74	V	0.9	9.5	24.32	33.0	-8.7	
2501.00	15.94	H	0.9	9.5	24.52	33.0	-8.5	
Mid Ch								
2593.00	16.87	V	0.9	9.5	25.48	33.0	-7.5	
2593.00	17.19	H	0.9	9.5	25.80	33.0	-7.2	
High Ch								
2685.00	15.17	V	0.9	9.7	24.01	33.0	-9.0	
2685.00	16.16	H	0.9	9.7	25.00	33.0	-8.0	

This report shall not be reproduced except in full, without the written approval of UL Verification Services Inc.

Band

LTE41

5MHz

16QAM

High Frequency Substitution Measurement
UL Verification Services, Inc.

Company: LG Electronics
Project #: 15I20527
Date: 4/23/2015
Test Engineer: R.Z
Configuration: EUT ONLY
Location: Chamber F
Mode: LTE_16QAM Band 41 Fundamentals, 5MHz Bandwidth

Test Equpment:
Receiving: Horn T120, and Chamber F SMA Cables
Substitution: Horn T60, 6ft SMA Cable

f MHz	SG reading (dBm)	Ant. Pol. (H/V)	Cable Loss (dB)	Antenna Gain (dBi)	EIRP (dBm)	Limit (dBm)	Delta (dB)	Notes
Low Ch								
2498.50	15.00	V	0.9	9.5	23.57	33.0	-9.4	
2498.50	15.40	H	0.9	9.5	23.97	33.0	-9.0	
Mid Ch								
2593.00	16.00	V	0.9	9.5	24.61	33.0	-8.4	
2593.00	16.10	H	0.9	9.5	24.71	33.0	-8.3	
High Ch								
2687.50	13.50	V	0.9	9.7	22.35	33.0	-10.7	
2687.50	14.60	H	0.9	9.7	23.45	33.0	-9.6	

This report shall not be reproduced except in full, without the written approval of UL Verification Services Inc.

Band

LTE41

5MHz

QPSK

High Frequency Substitution Measurement
UL Verification Services, Inc.

Company: LG Electronics
Project #: 15I20527
Date: 4/23/2015
Test Engineer: R.Z
Configuration: EUT ONLY
Location: Chamber F
Mode: LTE_QPSK Band 41 Fundamentals, 5MHz Bandwidth

Test Equpment:
Receiving: Horn T120, and Chamber F SMA Cables
Substitution: Horn T60, 6ft SMA Cable

f MHz	SG reading (dBm)	Ant. Pol. (H/V)	Cable Loss (dB)	Antenna Gain (dBi)	EIRP (dBm)	Limit (dBm)	Delta (dB)	Notes
Low Ch								
2498.50	15.80	V	0.9	9.5	24.37	33.0	-8.6	
2498.50	15.90	H	0.9	9.5	24.47	33.0	-8.5	
Mid Ch								
2593.00	16.50	V	0.9	9.5	25.11	33.0	-7.9	
2593.00	16.80	H	0.9	9.5	25.41	33.0	-7.6	
High Ch								
2687.50	14.30	V	0.9	9.7	23.15	33.0	-9.9	
2687.50	15.20	H	0.9	9.7	24.05	33.0	-9.0	

This report shall not be reproduced except in full, without the written approval of UL Verification Services Inc.

9.2. FIELD STRENGTH OF SPURIOUS RADIATION

RULE PART(S)

FCC: §2.1053, §22.917, §24.238, §27.53 and §90.691

LIMIT

The power of any emission outside of the authorized operating frequency ranges must be attenuated below the transmitting power (P) by a factor of at least 43 + 10 log (P) dB.

Part 27: (m)(4) (4) For mobile digital stations, the attenuation factor shall be not less than 40 + 10 log (P) dB on all frequencies between the channel edge and 5 megahertz from the channel edge, 43 + 10 log (P) dB on all frequencies between 5 megahertz and X megahertz from the channel edge, and 55 + 10 log (P) dB on all frequencies more than X megahertz from the channel edge, where X is the greater of 6 megahertz or the actual emission bandwidth as defined in paragraph (m)(6) of this section. In addition, the attenuation factor shall not be less that 43 + 10 log (P) dB on all frequencies between 2490.5 MHz and 2496 MHz and 55 + 10 log (P) dB at or below 2490.5 MHz. Mobile Satellite Service licensees operating on frequencies below 2495 MHz may also submit a documented interference complaint against BRS licensees operating on channel BRS Channel 1 on the same terms and conditions as adjacent channel BRS or EBS licensees.

TEST PROCEDURE

For Cellular equipment - Compliance with these rules is based on the use of measurement instrumentation employing a resolution bandwidth of 100 kHz or greater. In the 1 MHz bands immediately outside and adjacent to the frequency block a resolution bandwidth of at least one percent of the emission bandwidth of the fundamental emission of the transmitter may be employed. A narrower resolution bandwidth is permitted in all cases to improve measurement accuracy provided the measured power is integrated over the full required measurement bandwidth (i.e. 100 kHz or 1 percent of emission bandwidth, as specified). The emission bandwidth is defined as the width of the signal between two points, one below the carrier center frequency and one above the carrier center frequency, outside of which all emissions are attenuated at least 26 dB below the transmitter power.

For PCS equipment - Compliance with these rules is based on the use of measurement instrumentation employing a resolution bandwidth of 1 MHz or greater. However, in the 1 MHz bands immediately outside and adjacent to the frequency block a resolution bandwidth of at least one percent of the emission bandwidth of the fundamental emission of the transmitter may be employed. A narrower resolution bandwidth is permitted in all cases to improve measurement accuracy provided the measured power is integrated over the full required measurement bandwidth (i.e. 1 MHz or 1 percent of emission bandwidth, as specified). The emission bandwidth is defined as the width of the signal between two points, one below the carrier center frequency and one above the carrier center frequency, outside of which all emissions are attenuated at least 26 dB below the transmitter power.

MODES TESTED

CDMA and LTE

RESULTS

This report shall not be reproduced except in full, without the written approval of UL Verification Services Inc.

9.2.1. SPURIOUS RADIATION PLOTS

CDMA

UL Verification Services, Inc.
Above 1GHz High Frequency Substitution Measurement

Company: LG Electronics
Project #: 15I20527
Date: 4/22/2015
Test Engineer: R.Z
Configuration: EUT , AC Adapter, Headset
Location: Chamber G
Mode: CDMA EVDO BC1 Harmonics

Band BC1

f MHz	SG reading (dBm)	Ant. Pol. (H/V)	Distance (m)	Preamp (dB)	Filter (dB)	EIRP (dBm)	Limit (dBm)	Delta (dB)	Notes
Low Ch, 1851.25									
3702.50	-9.6	V	3.0	35.9	1.0	-44.4	-13.0	-31.4	
5553.75	-7.1	V	3.0	35.5	1.0	-41.6	-13.0	-28.6	
7405.00	4.4	V	3.0	35.7	1.0	-30.4	-13.0	-17.4	
3702.50	-9.9	H	3.0	35.9	1.0	-44.7	-13.0	-31.7	
5553.75	-7.5	H	3.0	35.5	1.0	-41.9	-13.0	-28.9	
7405.00	1.6	H	3.0	35.7	1.0	-33.1	-13.0	-20.1	
Mid Ch, 1880									
3760.00	-11.1	V	3.0	35.8	1.0	-45.9	-13.0	-32.9	
5640.00	-7.4	V	3.0	35.5	1.0	-41.9	-13.0	-28.9	
7520.00	2.3	V	3.0	35.7	1.0	-32.5	-13.0	-19.5	
3760.00	-10.2	H	3.0	35.8	1.0	-45.0	-13.0	-32.0	
5640.00	-8.0	H	3.0	35.5	1.0	-42.5	-13.0	-29.5	
7520.00	0.8	H	3.0	35.7	1.0	-34.0	-13.0	-21.0	
High Ch, 1908.75									
3817.50	-8.9	V	3.0	35.8	1.0	-43.7	-13.0	-30.7	
5726.25	-6.1	V	3.0	35.5	1.0	-40.6	-13.0	-27.6	
7635.00	3.7	V	3.0	35.8	1.0	-31.0	-13.0	-18.0	
3817.50	-8.1	H	3.0	35.8	1.0	-42.9	-13.0	-29.9	
5726.25	-8.1	H	3.0	35.5	1.0	-42.6	-13.0	-29.6	
7635.00	1.3	H	3.0	35.8	1.0	-33.5	-13.0	-20.5	

This report shall not be reproduced except in full, without the written approval of UL Verification Services Inc.

UL Verification Services, Inc.
Above 1GHz High Frequency Substitution Measurement

Company: LG Electronics
Project #: 15I20527
Date: 4/22/2015
Test Engineer: R.Z
Configuration: EUT , AC Adapter, Headset
Location: Chamber G
Mode: CDMA 1xRTT BC1 Harmonics

Band BC1 1xRTT

f MHz	SG reading (dBm)	Ant. Pol. (H/V)	Distance (m)	Preamp (dB)	Filter (dB)	EIRP (dBm)	Limit (dBm)	Delta (dB)	Notes
Low Ch, 1851.25									
3702.50	-11.5	V	3.0	35.9	1.0	-46.4	-13.0	-33.4	
5553.75	-5.5	V	3.0	35.5	1.0	-40.0	-13.0	-27.0	
7405.00	5.8	V	3.0	35.7	1.0	-29.0	-13.0	-16.0	
3702.50	-12.0	H	3.0	35.9	1.0	-46.9	-13.0	-33.9	
5553.75	-8.7	H	3.0	35.5	1.0	-43.1	-13.0	-30.1	
7405.00	2.0	H	3.0	35.7	1.0	-32.7	-13.0	-19.7	
Mid Ch, 1880									
3760.00	-9.8	V	3.0	35.8	1.0	-44.6	-13.0	-31.6	
5640.00	-5.9	V	3.0	35.5	1.0	-40.4	-13.0	-27.4	
7520.00	3.6	V	3.0	35.7	1.0	-31.1	-13.0	-18.1	
3760.00	-11.5	H	3.0	35.8	1.0	-46.3	-13.0	-33.3	
5640.00	-8.0	H	3.0	35.5	1.0	-42.5	-13.0	-29.5	
7520.00	3.6	H	3.0	35.7	1.0	-31.2	-13.0	-18.2	
High Ch, 1908.75									
3817.50	-10.0	V	3.0	35.8	1.0	-44.8	-13.0	-31.8	
5726.25	-6.5	V	3.0	35.5	1.0	-41.0	-13.0	-28.0	
7635.00	3.0	V	3.0	35.8	1.0	-31.7	-13.0	-18.7	
3817.50	-10.5	H	3.0	35.8	1.0	-45.3	-13.0	-32.3	
5726.25	-10.1	H	3.0	35.5	1.0	-44.6	-13.0	-31.6	
7635.00	0.2	H	3.0	35.8	1.0	-34.6	-13.0	-21.6	

This report shall not be reproduced except in full, without the written approval of UL Verification Services Inc.

Band

BC0

UL Verification Services, Inc.
Above 1GHz High Frequency Substitution Measurement

Company: LG Electronics
Project #: 15I20527
Date: 4/22/2015
Test Engineer: R.Z
Configuration: EUT , AC Adapter, Headset
Location: Chamber G
Mode: CDMA EVDO BC0 Harmonics

f MHz	SG reading (dBm)	Ant. Pol. (H/V)	Distance (m)	Preamp (dB)	Filter (dB)	EIRP (dBm)	Limit (dBm)	Delta (dB)	Notes
Low Ch, 824.7									
1649.40	-27.5	V	3.0	37.4	1.0	-63.9	-13.0	-50.9	
2474.10	-26.4	V	3.0	36.4	1.0	-61.8	-13.0	-48.8	
3298.80	-21.5	V	3.0	35.8	1.0	-56.3	-13.0	-43.3	
1649.40	-26.2	H	3.0	37.4	1.0	-62.6	-13.0	-49.6	
2474.10	-23.8	H	3.0	36.4	1.0	-59.2	-13.0	-46.2	
3298.80	-20.8	H	3.0	35.8	1.0	-55.6	-13.0	-42.6	
Mid Ch, 836.52									
1673.04	-22.5	V	3.0	37.3	1.0	-58.8	-13.0	-45.8	
2509.56	-26.6	V	3.0	36.4	1.0	-62.0	-13.0	-49.0	
3346.08	-22.1	V	3.0	35.8	1.0	-56.9	-13.0	-43.9	
1673.04	-23.2	H	3.0	37.3	1.0	-59.5	-13.0	-46.5	
2509.56	-24.6	H	3.0	36.4	1.0	-60.0	-13.0	-47.0	
3346.08	-21.5	H	3.0	35.8	1.0	-56.3	-13.0	-43.3	
High Ch, 848.31									
1696.62	-18.6	V	3.0	37.3	1.0	-54.9	-13.0	-41.9	
2544.93	-23.9	V	3.0	36.3	1.0	-59.2	-13.0	-46.2	
3393.24	-21.8	V	3.0	35.7	1.0	-56.5	-13.0	-43.5	
1696.62	-17.1	H	3.0	37.3	1.0	-53.4	-13.0	-40.4	
2544.93	-21.5	H	3.0	36.3	1.0	-56.8	-13.0	-43.8	
3393.24	-20.9	H	3.0	35.7	1.0	-55.6	-13.0	-42.6	

This report shall not be reproduced except in full, without the written approval of UL Verification Services Inc.

UL Verification Services, Inc.
Above 1GHz High Frequency Substitution Measurement

Company: LG Electronics
Project #: 15I20527
Date: 4/22/2015
Test Engineer: R.Z
Configuration: EUT , AC Adapter, Headset
Location: Chamber G
Mode: CDMA 1xRTT BC0 Harmonics

Band BC0 1xRTT

f MHz	SG reading (dBm)	Ant. Pol. (H/V)	Distance (m)	Preamp (dB)	Filter (dB)	EIRP (dBm)	Limit (dBm)	Delta (dB)	Notes
Low Ch, 824.7									
1649.40	-26.1	V	3.0	37.4	1.0	-62.5	-13.0	-49.5	
2474.10	-25.8	V	3.0	36.4	1.0	-61.2	-13.0	-48.2	
3298.80	-21.9	V	3.0	35.8	1.0	-56.7	-13.0	-43.7	
1649.40	-28.3	H	3.0	37.4	1.0	-64.7	-13.0	-51.7	
2474.10	-22.7	H	3.0	36.4	1.0	-58.1	-13.0	-45.1	
3298.80	-21.1	H	3.0	35.8	1.0	-55.9	-13.0	-42.9	
Mid Ch, 836.52									
1673.04	-25.8	V	3.0	37.3	1.0	-62.1	-13.0	-49.1	
2509.56	-25.5	V	3.0	36.4	1.0	-60.9	-13.0	-47.9	
3346.08	-21.1	V	3.0	35.8	1.0	-55.9	-13.0	-42.9	
1673.04	-23.9	H	3.0	37.3	1.0	-60.2	-13.0	-47.2	
2509.56	-22.8	H	3.0	36.4	1.0	-58.2	-13.0	-45.2	
3346.08	-19.6	H	3.0	35.8	1.0	-54.4	-13.0	-41.4	
High Ch, 848.31									
1696.62	-19.3	V	3.0	37.3	1.0	-55.6	-13.0	-42.6	
2544.93	-24.9	V	3.0	36.3	1.0	-60.2	-13.0	-47.2	
3393.24	-20.2	V	3.0	35.7	1.0	-54.9	-13.0	-41.9	
1696.62	-24.4	H	3.0	37.3	1.0	-60.7	-13.0	-47.7	
2544.93	-22.8	H	3.0	36.3	1.0	-58.1	-13.0	-45.1	
3393.24	-21.5	H	3.0	35.7	1.0	-56.2	-13.0	-43.2	

This report shall not be reproduced except in full, without the written approval of UL Verification Services Inc.

UL Verification Services, Inc.
Above 1GHz High Frequency Substitution Measurement

Company: LG Electronics
Project #: 15I20527
Date: 4/22/2015
Test Engineer: R.Z
Configuration: EUT , AC Adapter, Headset
Location: Chamber G
Mode: CDMA EVDO BC10 Harmonics

Band BC10

f MHz	SG reading (dBm)	Ant. Pol. (H/V)	Distance (m)	Preamp (dB)	Filter (dB)	EIRP (dBm)	Limit (dBm)	Delta (dB)	Notes
Low Ch, 817.9MHz									
1.636	-21.2	V	3.0	37.4	1.0	-57.6	-13.0	-44.6	
2.454	-26.1	V	3.0	36.4	1.0	-61.5	-13.0	-48.5	
3.272	-21.6	V	3.0	35.8	1.0	-56.4	-13.0	-43.4	
1.636	-22.2	H	3.0	37.4	1.0	-58.6	-13.0	-45.6	
2.454	-24.3	H	3.0	36.4	1.0	-59.7	-13.0	-46.7	
3.272	-21.3	H	3.0	35.8	1.0	-56.1	-13.0	-43.1	
Mid Ch, 820.5MHz									
1.641	-21.9	V	3.0	37.3	1.0	-58.2	-13.0	-45.2	
2.462	-25.6	V	3.0	36.4	1.0	-61.0	-13.0	-48.0	
3.282	-20.7	V	3.0	35.8	1.0	-55.5	-13.0	-42.5	
1.641	-24.3	H	3.0	37.3	1.0	-60.6	-13.0	-47.6	
2.462	-23.9	H	3.0	36.4	1.0	-59.3	-13.0	-46.3	
3.282	-20.1	H	3.0	35.8	1.0	-54.9	-13.0	-41.9	
High Ch, 823.1MHz									
1.646	-24.6	V	3.0	37.3	1.0	-60.9	-13.0	-47.9	
2.469	-25.2	V	3.0	36.3	1.0	-60.5	-13.0	-47.5	
3.292	-19.9	V	3.0	35.7	1.0	-54.6	-13.0	-41.6	
1.646	-24.6	H	3.0	37.3	1.0	-60.9	-13.0	-47.9	
2.469	-24.1	H	3.0	36.3	1.0	-59.4	-13.0	-46.4	
3.292	-21.3	H	3.0	35.7	1.0	-56.0	-13.0	-43.0	

This report shall not be reproduced except in full, without the written approval of UL Verification Services Inc.

UL Verification Services, Inc.
Above 1GHz High Frequency Substitution Measurement

Company: LG Electronics
Project #: 15I20527
Date: 4/22/2015
Test Engineer: R.Z
Configuration: EUT , AC Adapter, Headset
Location: Chamber G
Mode: CDMA 1xRTT BC10 Harmonics

Band

BC10

1xRTT

f MHz	SG reading (dBm)	Ant. Pol. (H/V)	Distance (m)	Preamp (dB)	Filter (dB)	EIRP (dBm)	Limit (dBm)	Delta (dB)	Notes
Low Ch, 817.9MHz									
1.636	-28.3	V	3.0	37.4	1.0	-64.7	-13.0	-51.7	
2.454	-24.8	V	3.0	36.4	1.0	-60.2	-13.0	-47.2	
3.272	-20.7	V	3.0	35.8	1.0	-55.5	-13.0	-42.5	
1.636	-21.5	H	3.0	37.4	1.0	-57.9	-13.0	-44.9	
2.454	-23.8	H	3.0	36.4	1.0	-59.2	-13.0	-46.2	
3.272	-21.7	H	3.0	35.8	1.0	-56.5	-13.0	-43.5	
Mid Ch, 820.5MHz									
1.641	-20.6	V	3.0	37.3	1.0	-56.9	-13.0	-43.9	
2.462	-26.1	V	3.0	36.4	1.0	-61.5	-13.0	-48.5	
3.282	-21.2	V	3.0	35.8	1.0	-56.0	-13.0	-43.0	
1.641	-23.0	H	3.0	37.3	1.0	-59.3	-13.0	-46.3	
2.462	-23.3	H	3.0	36.4	1.0	-58.7	-13.0	-45.7	
3.282	-20.2	H	3.0	35.8	1.0	-55.0	-13.0	-42.0	
High Ch, 823.1MHz									
1.646	-19.2	V	3.0	37.3	1.0	-55.5	-13.0	-42.5	
2.469	-25.5	V	3.0	36.3	1.0	-60.8	-13.0	-47.8	
3.292	-19.8	V	3.0	35.7	1.0	-54.5	-13.0	-41.5	
1.646	-21.3	H	3.0	37.3	1.0	-57.6	-13.0	-44.6	
2.469	-23.0	H	3.0	36.3	1.0	-58.3	-13.0	-45.3	
3.292	-21.4	H	3.0	35.7	1.0	-56.1	-13.0	-43.1	

This report shall not be reproduced except in full, without the written approval of UL Verification Services Inc.

LTE Band 2

Band

LTE2

20MHz

16QAM

UL Verification Services, Inc.
Above 1GHz High Frequency Substitution Measurement

Company: LG Electronics
Project #: 15I20527
Date: 4/20/2015
Test Engineer: R.Z
Configuration: EUT/ AC Charger/ Headset
Location: Chamber G
Mode: LTE_16QAM Band 2 Harmonics, 20MHz Bandwidth

f MHz	SG reading (dBm)	Ant. Pol. (H/V)	Distance (m)	Preamp (dB)	Filter (dB)	EIRP (dBm)	Limit (dBm)	Delta (dB)	Notes
Low Ch, 1860									
3720.00	-11.3	V	3.0	35.8	1.0	-46.1	-13.0	-33.1	
5580.00	-2.7	V	3.0	35.5	1.0	-37.2	-13.0	-24.2	
7440.00	4.7	V	3.0	35.7	1.0	-30.0	-13.0	-17.0	
3720.00	-11.2	H	3.0	35.8	1.0	-46.0	-13.0	-33.0	
5580.00	-6.1	H	3.0	35.5	1.0	-40.6	-13.0	-27.6	
7440.00	1.6	H	3.0	35.7	1.0	-33.2	-13.0	-20.2	
Mid Ch, 1880									
3760.00	-9.6	V	3.0	35.8	1.0	-44.4	-13.0	-31.4	
5640.00	-3.7	V	3.0	35.5	1.0	-38.2	-13.0	-25.2	
7520.00	1.9	V	3.0	35.7	1.0	-32.9	-13.0	-19.9	
3760.00	-9.3	H	3.0	35.8	1.0	-44.1	-13.0	-31.1	
5640.00	-5.6	H	3.0	35.5	1.0	-40.1	-13.0	-27.1	
7520.00	0.7	H	3.0	35.7	1.0	-34.1	-13.0	-21.1	
High Ch, 1900									
3800.00	-7.9	V	3.0	35.8	1.0	-42.6	-13.0	-29.6	
5700.00	-2.8	V	3.0	35.5	1.0	-37.3	-13.0	-24.3	
7600.00	2.6	V	3.0	35.8	1.0	-32.2	-13.0	-19.2	
3800.00	-7.3	H	3.0	35.8	1.0	-42.1	-13.0	-29.1	
5700.00	-4.5	H	3.0	35.5	1.0	-39.0	-13.0	-26.0	
7600.00	0.9	H	3.0	35.8	1.0	-33.9	-13.0	-20.9	

This report shall not be reproduced except in full, without the written approval of UL Verification Services Inc.

UL Verification Services, Inc.
Above 1GHz High Frequency Substitution Measurement

Company: LG Electronics
Project #: 15I20527
Date: 4/20/2015
Test Engineer: R.Z
Configuration: EUT/ AC Charger/ Headset
Location: Chamber G
Mode: LTE_QPSK Band 2 Harmonics, 20MHz Bandwidth

Band LTE2 20MHz QPSK

f MHz	SG reading (dBm)	Ant. Pol. (H/V)	Distance (m)	Preamp (dB)	Filter (dB)	EIRP (dBm)	Limit (dBm)	Delta (dB)	Notes
Low Ch, 1860									
3720.00	-9.6	V	3.0	35.8	1.0	-44.5	-13.0	-31.5	
5580.00	-1.9	V	3.0	35.5	1.0	-36.4	-13.0	-23.4	
7440.00	4.7	V	3.0	35.7	1.0	-30.1	-13.0	-17.1	
3720.00	-11.0	H	3.0	35.8	1.0	-45.8	-13.0	-32.8	
5580.00	-4.5	H	3.0	35.5	1.0	-39.0	-13.0	-26.0	
7440.00	3.5	H	3.0	35.7	1.0	-31.2	-13.0	-18.2	
Mid Ch, 1880									
3760.00	-8.6	V	3.0	35.8	1.0	-43.4	-13.0	-30.4	
5640.00	-1.0	V	3.0	35.5	1.0	-35.5	-13.0	-22.5	
7520.00	4.8	V	3.0	35.7	1.0	-29.9	-13.0	-16.9	
3760.00	-11.4	H	3.0	35.8	1.0	-46.2	-13.0	-33.2	
5640.00	-5.7	H	3.0	35.5	1.0	-40.2	-13.0	-27.2	
7520.00	-0.3	H	3.0	35.7	1.0	-35.1	-13.0	-22.1	
High Ch, 1900									
3800.00	-7.0	V	3.0	35.8	1.0	-41.8	-13.0	-28.8	
5700.00	-2.9	V	3.0	35.5	1.0	-37.4	-13.0	-24.4	
7600.00	2.4	V	3.0	35.8	1.0	-32.3	-13.0	-19.3	
3800.00	-7.6	H	3.0	35.8	1.0	-42.4	-13.0	-29.4	
5700.00	-4.4	H	3.0	35.5	1.0	-38.9	-13.0	-25.9	
7600.00	1.2	H	3.0	35.8	1.0	-33.5	-13.0	-20.5	

This report shall not be reproduced except in full, without the written approval of UL Verification Services Inc.

UL Verification Services, Inc.
Above 1GHz High Frequency Substitution Measurement

Company: LG Electronics
Project #: 15I20527
Date: 4/20/2015
Test Engineer: R.Z
Configuration: EUT/ AC Charger/ Headset
Location: Chamber G
Mode: LTE_16QAM Band 2 Harmonics, 15MHz Bandwidth

Band
LTE2
15MHz
16QAM

f MHz	SG reading (dBm)	Ant. Pol. (H/V)	Distance (m)	Preamp (dB)	Filter (dB)	EIRP (dBm)	Limit (dBm)	Delta (dB)	Notes
Low Ch, 1857.5									
3715.00	-10.6	V	3.0	35.8	1.0	-45.5	-13.0	-32.5	
5572.50	-3.8	V	3.0	35.5	1.0	-38.3	-13.0	-25.3	
7430.00	5.3	V	3.0	35.7	1.0	-29.5	-13.0	-16.5	
3715.00	-10.6	H	3.0	35.8	1.0	-45.4	-13.0	-32.4	
5572.50	-6.7	H	3.0	35.5	1.0	-41.2	-13.0	-28.2	
7430.00	2.5	H	3.0	35.7	1.0	-32.3	-13.0	-19.3	
Mid Ch, 1880									
3760.00	-10.1	V	3.0	35.8	1.0	-44.9	-13.0	-31.9	
5640.00	-4.9	V	3.0	35.5	1.0	-39.4	-13.0	-26.4	
7520.00	4.5	V	3.0	35.7	1.0	-30.3	-13.0	-17.3	
3760.00	-10.1	H	3.0	35.8	1.0	-44.9	-13.0	-31.9	
5640.00	-7.9	H	3.0	35.5	1.0	-42.4	-13.0	-29.4	
7520.00	1.3	H	3.0	35.7	1.0	-33.5	-13.0	-20.5	
High Ch, 1902.5									
3805.00	-6.8	V	3.0	35.8	1.0	-41.6	-13.0	-28.6	
5707.50	-4.0	V	3.0	35.5	1.0	-38.5	-13.0	-25.5	
7610.00	4.7	V	3.0	35.8	1.0	-30.1	-13.0	-17.1	
3805.00	-8.2	H	3.0	35.8	1.0	-43.0	-13.0	-30.0	
5707.50	-6.3	H	3.0	35.5	1.0	-40.8	-13.0	-27.8	
7610.00	1.4	H	3.0	35.8	1.0	-33.4	-13.0	-20.4	

This report shall not be reproduced except in full, without the written approval of UL Verification Services Inc.

Band

LTE2

15MHz

QPSK

UL Verification Services, Inc.
Above 1GHz High Frequency Substitution Measurement

Company: LG Electronics
Project #: 15I20527
Date: 4/20/2015
Test Engineer: R.Z
Configuration: EUT/ AC Charger/ Headset
Location: Chamber G
Mode: LTE_QPSK Band 2 Harmonics, 15MHz Bandwidth

f MHz	SG reading (dBm)	Ant. Pol. (H/V)	Distance (m)	Preamp (dB)	Filter (dB)	EIRP (dBm)	Limit (dBm)	Delta (dB)	Notes
Low Ch, 1857.5									
3715.00	-11.0	V	3.0	35.8	1.0	-45.9	-13.0	-32.9	
5572.50	-5.3	V	3.0	35.5	1.0	-39.7	-13.0	-26.7	
7430.00	4.8	V	3.0	35.7	1.0	-29.9	-13.0	-16.9	
3715.00	-8.7	H	3.0	35.8	1.0	-43.5	-13.0	-30.5	
5572.50	-7.8	H	3.0	35.5	1.0	-42.3	-13.0	-29.3	
7430.00	2.9	H	3.0	35.7	1.0	-31.8	-13.0	-18.8	
Mid Ch, 1880									
3760.00	-10.1	V	3.0	35.8	1.0	-44.9	-13.0	-31.9	
5640.00	-4.9	V	3.0	35.5	1.0	-39.4	-13.0	-26.4	
7520.00	4.5	V	3.0	35.7	1.0	-30.3	-13.0	-17.3	
3760.00	-10.9	H	3.0	35.8	1.0	-45.7	-13.0	-32.7	
5640.00	-7.7	H	3.0	35.5	1.0	-42.2	-13.0	-29.2	
7520.00	0.3	H	3.0	35.7	1.0	-34.5	-13.0	-21.5	
High Ch, 1902.5									
3805.00	-6.3	V	3.0	35.8	1.0	-41.1	-13.0	-28.1	
5707.50	-5.4	V	3.0	35.5	1.0	-39.9	-13.0	-26.9	
7610.00	4.3	V	3.0	35.8	1.0	-30.5	-13.0	-17.5	
3805.00	-7.1	H	3.0	35.8	1.0	-41.9	-13.0	-28.9	
5707.50	-6.2	H	3.0	35.5	1.0	-40.7	-13.0	-27.7	
7610.00	2.1	H	3.0	35.8	1.0	-32.6	-13.0	-19.6	

This report shall not be reproduced except in full, without the written approval of UL Verification Services Inc.

Band

LTE2

10MHz

16QAM

UL Verification Services, Inc.
Above 1GHz High Frequency Substitution Measurement

Company: LG Electronics
Project #: 15I20527
Date: 4/20/2015
Test Engineer: R.Z
Configuration: EUT/ AC Charger/ Headset
Location: Chamber G
Mode: LTE_16QAM Band 2 Harmonics, 10MHz Bandwidth

f MHz	SG reading (dBm)	Ant. Pol. (H/V)	Distance (m)	Preamp (dB)	Filter (dB)	EIRP (dBm)	Limit (dBm)	Delta (dB)	Notes
Low Ch, 1855									
3710.00	-11.2	V	3.0	35.9	1.0	-46.1	-13.0	-33.1	
5565.00	-4.0	V	3.0	35.5	1.0	-38.5	-13.0	-25.5	
7420.00	5.0	V	3.0	35.7	1.0	-29.7	-13.0	-16.7	
3710.00	-12.4	H	3.0	35.9	1.0	-47.3	-13.0	-34.3	
5565.00	-6.3	H	3.0	35.5	1.0	-40.7	-13.0	-27.7	
7420.00	3.5	H	3.0	35.7	1.0	-31.2	-13.0	-18.2	
Mid Ch, 1880									
3760.00	-9.7	V	3.0	35.8	1.0	-44.5	-13.0	-31.5	
5640.00	-3.5	V	3.0	35.5	1.0	-38.0	-13.0	-25.0	
7520.00	5.4	V	3.0	35.7	1.0	-29.4	-13.0	-16.4	
3760.00	-11.3	H	3.0	35.8	1.0	-46.1	-13.0	-33.1	
5640.00	-6.6	H	3.0	35.5	1.0	-41.1	-13.0	-28.1	
7520.00	0.4	H	3.0	35.7	1.0	-34.3	-13.0	-21.3	
High Ch, 1905									
3810.00	-6.2	V	3.0	35.8	1.0	-41.0	-13.0	-28.0	
5715.00	-5.5	V	3.0	35.5	1.0	-40.0	-13.0	-27.0	
7620.00	4.1	V	3.0	35.8	1.0	-30.6	-13.0	-17.6	
3810.00	-6.4	H	3.0	35.8	1.0	-41.2	-13.0	-28.2	
5715.00	-6.5	H	3.0	35.5	1.0	-41.0	-13.0	-28.0	
7620.00	1.1	H	3.0	35.8	1.0	-33.6	-13.0	-20.6	

This report shall not be reproduced except in full, without the written approval of UL Verification Services Inc.

UL Verification Services, Inc.
Above 1GHz High Frequency Substitution Measurement

Company: LG Electronics
Project #: 15I20527
Date: 4/20/2015
Test Engineer: R.Z
Configuration: EUT/ AC Charger/ Headset
Location: Chamber G
Mode: LTE_QPSK Band 2 Harmonics, 10MHz Bandwidth

Band LTE2 10MHz QPSK

f MHz	SG reading (dBm)	Ant. Pol. (H/V)	Distance (m)	Preamp (dB)	Filter (dB)	EIRP (dBm)	Limit (dBm)	Delta (dB)	Notes
Low Ch, 1855									
3710.00	-11.0	V	3.0	35.9	1.0	-45.9	-13.0	-32.9	
5565.00	-4.1	V	3.0	35.5	1.0	-38.6	-13.0	-25.6	
7420.00	6.2	V	3.0	35.7	1.0	-28.5	-13.0	-15.5	
3710.00	-9.3	H	3.0	35.9	1.0	-44.2	-13.0	-31.2	
5565.00	-4.4	H	3.0	35.5	1.0	-38.8	-13.0	-25.8	
7420.00	2.4	H	3.0	35.7	1.0	-32.4	-13.0	-19.4	
Mid Ch, 1880									
3760.00	-8.0	V	3.0	35.8	1.0	-42.8	-13.0	-29.8	
5640.00	-5.2	V	3.0	35.5	1.0	-39.7	-13.0	-26.7	
7520.00	3.6	V	3.0	35.7	1.0	-31.1	-13.0	-18.1	
3760.00	-11.2	H	3.0	35.8	1.0	-46.0	-13.0	-33.0	
5640.00	-6.8	H	3.0	35.5	1.0	-41.3	-13.0	-28.3	
7520.00	1.4	H	3.0	35.7	1.0	-33.4	-13.0	-20.4	
High Ch, 1905									
3810.00	-7.4	V	3.0	35.8	1.0	-42.2	-13.0	-29.2	
5715.00	-4.6	V	3.0	35.5	1.0	-39.1	-13.0	-26.1	
7620.00	3.7	V	3.0	35.8	1.0	-31.0	-13.0	-18.0	
3810.00	-8.3	H	3.0	35.8	1.0	-43.1	-13.0	-30.1	
5715.00	-6.7	H	3.0	35.5	1.0	-41.2	-13.0	-28.2	
7620.00	1.1	H	3.0	35.8	1.0	-33.7	-13.0	-20.7	

This report shall not be reproduced except in full, without the written approval of UL Verification Services Inc.

UL Verification Services, Inc.
Above 1GHz High Frequency Substitution Measurement

Company: LG Electronics
Project #: 15I20527
Date: 5/1/2015
Test Engineer: Jude Semana
Configuration: EUT/ AC Charger/ Headset
Location: Chamber A
Mode: LTE_16QAM Band 2 Harmonics, 5MHz Bandwidth

Band	f MHz	SG reading (dBm)	Ant. Pol. (H/V)	Distance (m)	Preamp (dB)	Filter (dB)	EIRP (dBm)	Limit (dBm)	Delta (dB)	Notes
	Low Ch, 1852.5									
LTE2	3705.00	-15.5	V	3.0	35.9	1.0	-50.4	-13.0	-37.4	
	5557.50	-7.4	V	3.0	35.5	1.0	-41.8	-13.0	-28.8	
5MHz	7410.00	-0.6	V	3.0	35.7	1.0	-35.3	-13.0	-22.3	
	3705.00	-13.8	H	3.0	35.9	1.0	-48.6	-13.0	-35.6	
16QAM	5557.50	-14.6	H	3.0	35.5	1.0	-49.1	-13.0	-36.1	
	7410.00	-9.5	H	3.0	35.7	1.0	-44.2	-13.0	-31.2	
	Mid Ch, 1880									
	3760.00	-11.7	V	3.0	35.8	1.0	-46.5	-13.0	-33.5	
	5640.00	-8.2	V	3.0	35.5	1.0	-42.7	-13.0	-29.7	
	7520.00	-12.3	V	3.0	35.7	1.0	-47.0	-13.0	-34.0	
	3760.00	-12.2	H	3.0	35.8	1.0	-47.0	-13.0	-34.0	
	5640.00	-9.7	H	3.0	35.5	1.0	-44.1	-13.0	-31.1	
	7520.00	-3.0	H	3.0	35.7	1.0	-37.8	-13.0	-24.8	
	High Ch, 1907.5									
	3815.00	-14.5	V	3.0	35.8	1.0	-49.3	-13.0	-36.3	
	5722.50	-5.7	V	3.0	35.5	1.0	-40.2	-13.0	-27.2	
	7630.00	-10.8	V	3.0	35.8	1.0	-45.6	-13.0	-32.6	
	3815.00	-13.3	H	3.0	35.8	1.0	-48.1	-13.0	-35.1	
	5722.50	-6.9	H	3.0	35.5	1.0	-41.4	-13.0	-28.4	
	7630.00	-4.1	H	3.0	35.8	1.0	-38.8	-13.0	-25.8	

This report shall not be reproduced except in full, without the written approval of UL Verification Services Inc.

UL Verification Services, Inc.
Above 1GHz High Frequency Substitution Measurement

Company: LG Electronics
Project #: 15I20527
Date: 5/1/2015
Test Engineer: Jude Semana
Configuration: EUT/ AC Charger/ Headset
Location: Chamber A
Mode: LTE_QPSK Band 2 Harmonics, 5MHz Bandwidth

Band	f MHz	SG reading (dBm)	Ant. Pol. (H/V)	Distance (m)	Preamp (dB)	Filter (dB)	EIRP (dBm)	Limit (dBm)	Delta (dB)	Notes
	Low Ch, 1852.5									
LTE2	3705.00	-14.0	V	3.0	35.9	1.0	-48.9	-13.0	-35.9	
	5557.50	-7.0	V	3.0	35.5	1.0	-41.5	-13.0	-28.5	
5MHz	7410.00	2.2	V	3.0	35.7	1.0	-32.6	-13.0	-19.6	
	3705.00	-11.4	H	3.0	35.9	1.0	-46.3	-13.0	-33.3	
QPSK	5557.50	-14.2	H	3.0	35.5	1.0	-48.7	-13.0	-35.7	
	7410.00	-5.0	H	3.0	35.7	1.0	-39.7	-13.0	-26.7	
	Mid Ch, 1880									
	3760.00	-11.9	V	3.0	35.8	1.0	-46.7	-13.0	-33.7	
	5640.00	-8.5	V	3.0	35.5	1.0	-43.0	-13.0	-30.0	
	7520.00	-8.6	V	3.0	35.7	1.0	-43.4	-13.0	-30.4	
	3760.00	-12.3	H	3.0	35.8	1.0	-47.2	-13.0	-34.2	
	5640.00	-10.4	H	3.0	35.5	1.0	-44.9	-13.0	-31.9	
	7520.00	-4.1	H	3.0	35.7	1.0	-38.8	-13.0	-25.8	
	High Ch, 1907.5									
	3815.00	-14.7	V	3.0	35.8	1.0	-49.5	-13.0	-36.5	
	5722.50	-6.6	V	3.0	35.5	1.0	-41.1	-13.0	-28.1	
	7630.00	-11.5	V	3.0	35.8	1.0	-46.2	-13.0	-33.2	
	3815.00	-13.1	H	3.0	35.8	1.0	-47.9	-13.0	-34.9	
	5722.50	-6.7	H	3.0	35.5	1.0	-41.2	-13.0	-28.2	
	7630.00	-4.3	H	3.0	35.8	1.0	-39.1	-13.0	-26.1	

This report shall not be reproduced except in full, without the written approval of UL Verification Services Inc.

UL Verification Services, Inc.
Above 1GHz High Frequency Substitution Measurement

Company: LG Electronics
Project #: 15I20527
Date: 5/1/2015
Test Engineer: Jude Semana
Configuration: EUT/ AC Charger/ Headset
Location: Chamber B
Mode: LTE_16QAM Band 2 Harmonics, 3MHz Bandwidth

Band	f MHz	SG reading (dBm)	Ant. Pol. (H/V)	Distance (m)	Preamp (dB)	Filter (dB)	EIRP (dBm)	Limit (dBm)	Delta (dB)	Notes
	Low Ch, 1851.5									
LTE2	3703.00	-10.1	V	3.0	35.9	1.0	-44.9	-13.0	-31.9	
	5554.50	-11.1	V	3.0	35.5	1.0	-45.6	-13.0	-32.6	
3MHz	7406.00	-1.1	V	3.0	35.7	1.0	-35.9	-13.0	-22.9	
	3703.00	-11.9	H	3.0	35.9	1.0	-46.8	-13.0	-33.8	
16QAM	5554.50	-14.5	H	3.0	35.5	1.0	-49.0	-13.0	-36.0	
	7406.00	-3.0	H	3.0	35.7	1.0	-37.7	-13.0	-24.7	
	Mid Ch, 1880									
	3760.00	-12.3	V	3.0	35.8	1.0	-47.1	-13.0	-34.1	
	5640.00	-4.4	V	3.0	35.5	1.0	-38.9	-13.0	-25.9	
	7520.00	1.3	V	3.0	35.7	1.0	-33.4	-13.0	-20.4	
	3760.00	-9.6	H	3.0	35.8	1.0	-44.4	-13.0	-31.4	
	5640.00	-11.4	H	3.0	35.5	1.0	-45.9	-13.0	-32.9	
	7520.00	-5.1	H	3.0	35.7	1.0	-39.8	-13.0	-26.8	
	High Ch, 1908.5									
	3817.00	102.5	V	3.0	35.8	1.0	67.8	-13.0	80.8	
	5725.50	-9.9	V	3.0	35.5	1.0	-44.4	-13.0	-31.4	
	7634.00	-1.6	V	3.0	35.8	1.0	-36.4	-13.0	-23.4	
	3817.00	-7.9	H	3.0	35.8	1.0	-42.7	-13.0	-29.7	
	5725.50	-12.6	H	3.0	35.5	1.0	-47.1	-13.0	-34.1	
	7634.00	-8.8	H	3.0	35.8	1.0	-43.6	-13.0	-30.6	

This report shall not be reproduced except in full, without the written approval of UL Verification Services Inc.

UL Verification Services, Inc.
Above 1GHz High Frequency Substitution Measurement

Company: LG Electronics
Project #: 15I20527
Date: 5/1/2015
Test Engineer: Jude Semana
Configuration: EUT/ AC Charger/ Headset
Location: Chamber B
Mode: LTE_QPSK Band 2 Harmonics, 3MHz Bandwidth

Band	f MHz	SG reading (dBm)	Ant. Pol. (H/V)	Distance (m)	Preamp (dB)	Filter (dB)	EIRP (dBm)	Limit (dBm)	Delta (dB)	Notes
	Low Ch, 1851.5									
LTE2	3703.00	-9.5	V	3.0	35.9	1.0	-44.4	-13.0	-31.4	
	5554.50	-10.9	V	3.0	35.5	1.0	-45.4	-13.0	-32.4	
3MHz	7406.00	-1.6	V	3.0	35.7	1.0	-36.3	-13.0	-23.3	
	3703.00	-12.3	H	3.0	35.9	1.0	-47.2	-13.0	-34.2	
QPSK	5554.50	-14.5	H	3.0	35.5	1.0	-49.0	-13.0	-36.0	
	7406.00	-2.8	H	3.0	35.7	1.0	-37.5	-13.0	-24.5	
	Mid Ch, 1880									
	3760.00	-12.6	V	3.0	35.8	1.0	-47.4	-13.0	-34.4	
	5640.00	-4.4	V	3.0	35.5	1.0	-38.8	-13.0	-25.8	
	7520.00	1.0	V	3.0	35.7	1.0	-33.7	-13.0	-20.7	
	3760.00	-9.5	H	3.0	35.8	1.0	-44.3	-13.0	-31.3	
	5640.00	-11.1	H	3.0	35.5	1.0	-45.6	-13.0	-32.6	
	7520.00	-5.0	H	3.0	35.7	1.0	-39.8	-13.0	-26.8	
	High Ch, 1908.5									
	3817.00	-12.3	V	3.0	35.8	1.0	-47.1	-13.0	-34.1	
	5725.50	-9.3	V	3.0	35.5	1.0	-43.8	-13.0	-30.8	
	7634.00	-2.0	V	3.0	35.8	1.0	-36.7	-13.0	-23.7	
	3817.00	-8.4	H	3.0	35.8	1.0	-43.1	-13.0	-30.1	
	5725.50	-12.4	H	3.0	35.5	1.0	-46.9	-13.0	-33.9	
	7634.00	-8.9	H	3.0	35.8	1.0	-43.6	-13.0	-30.6	

This report shall not be reproduced except in full, without the written approval of UL Verification Services Inc.

UL Verification Services, Inc.
Above 1GHz High Frequency Substitution Measurement

Company: LG Electronics
Project #: 15I20527
Date: 4/17/2015
Test Engineer: R.Z
Configuration: EUT/ AC Charger/ Headset
Location: Chamber G
Mode: LTE_16QAM Band 2 Harmonics, 1.4MHz Bandwidth

Band
LTE2
1.4MHz
16QAM

f MHz	SG reading (dBm)	Ant. Pol. (H/V)	Distance (m)	Preamp (dB)	Filter (dB)	EIRP (dBm)	Limit (dBm)	Delta (dB)	Notes
Low Ch, 1850.7									
3701.40	-11.0	V	3.0	35.9	1.0	-45.8	-13.0	-32.8	
5552.10	-4.8	V	3.0	35.5	1.0	-39.3	-13.0	-26.3	
7402.80	5.5	V	3.0	35.7	1.0	-29.2	-13.0	-16.2	
3701.40	-12.5	H	3.0	35.9	1.0	-47.4	-13.0	-34.4	
5552.10	-8.8	H	3.0	35.5	1.0	-43.3	-13.0	-30.3	
7402.80	5.1	H	3.0	35.7	1.0	-29.6	-13.0	-16.6	
Mid Ch, 1880									
3760.00	-14.3	V	3.0	35.8	1.0	-44.7	-13.0	-31.7	
5640.00	-14.1	V	3.0	35.5	1.0	-48.6	-13.0	-35.6	
7520.00	-5.7	V	3.0	35.7	1.0	-40.5	-13.0	-27.5	
3760.00	-17.7	H	3.0	35.8	1.0	-52.5	-13.0	-39.5	
5640.00	-14.8	H	3.0	35.5	1.0	-49.3	-13.0	-36.3	
7520.00	-11.0	H	3.0	35.7	1.0	-45.8	-13.0	-32.8	
High Ch, 1909.3									
3818.60	-6.4	V	3.0	35.8	1.0	-41.2	-13.0	-28.2	
5727.90	-7.9	V	3.0	35.5	1.0	-42.4	-13.0	-29.4	
7637.20	5.6	V	3.0	35.8	1.0	-29.2	-13.0	-16.2	
3818.60	-6.3	H	3.0	35.8	1.0	-41.1	-13.0	-28.1	
5727.90	-8.7	H	3.0	35.5	1.0	-43.2	-13.0	-30.2	
7637.20	3.7	H	3.0	35.8	1.0	-31.1	-13.0	-18.1	

This report shall not be reproduced except in full, without the written approval of UL Verification Services Inc.

UL Verification Services, Inc.
Above 1GHz High Frequency Substitution Measurement

Company: LG Electronics
Project #: 15I20527
Date: 4/17/2015
Test Engineer: R.Z
Configuration: EUT/ AC Charger/ Headset
Location: Chamber G
Mode: LTE_QPSK Band 2 Harmonics, 1.4MHz Bandwidth

Band LTE2 1.4MHz QPSK

f MHz	SG reading (dBm)	Ant. Pol. (H/V)	Distance (m)	Preamp (dB)	Filter (dB)	EIRP (dBm)	Limit (dBm)	Delta (dB)	Notes
Low Ch, 1850.7									
3701.40	-9.7	V	3.0	35.9	1.0	-44.5	-13.0	-31.5	
5552.10	-6.1	V	3.0	35.5	1.0	-40.6	-13.0	-27.6	
7402.80	4.6	V	3.0	35.7	1.0	-30.1	-13.0	-17.1	
3701.40	-10.2	H	3.0	35.9	1.0	-45.0	-13.0	-32.0	
5552.10	-7.7	H	3.0	35.5	1.0	-42.2	-13.0	-29.2	
7402.80	4.2	H	3.0	35.7	1.0	-30.5	-13.0	-17.5	
Mid Ch, 1880									
3760.00	-16.9	V	3.0	35.8	1.0	-51.7	-13.0	-38.7	
5640.00	-16.0	V	3.0	35.5	1.0	-50.5	-13.0	-37.5	
7520.00	-8.9	V	3.0	35.7	1.0	-43.6	-13.0	-30.6	
3760.00	-17.3	H	3.0	35.8	1.0	-52.1	-13.0	-39.1	
5640.00	-15.0	H	3.0	35.5	1.0	-49.5	-13.0	-36.5	
7520.00	-9.2	H	3.0	35.7	1.0	-43.9	-13.0	-30.9	
High Ch, 1909.3									
3818.60	-6.2	V	3.0	35.8	1.0	-41.0	-13.0	-28.0	
5727.90	-7.1	V	3.0	35.5	1.0	-41.6	-13.0	-28.6	
7637.20	4.6	V	3.0	35.8	1.0	-30.2	-13.0	-17.2	
3818.60	-8.5	H	3.0	35.8	1.0	-43.3	-13.0	-30.3	
5727.90	-7.8	H	3.0	35.5	1.0	-42.3	-13.0	-29.3	
7637.20	-0.8	H	3.0	35.8	1.0	-35.6	-13.0	-22.6	

This report shall not be reproduced except in full, without the written approval of UL Verification Services Inc.

LTE Band 4

Band

LTE4

20MHz

16QAM

UL Verification Services, Inc.
Above 1GHz High Frequency Substitution Measurement

Company: LG
Project #: 15I20527
Date: 4/20/2015
Test Engineer: R.Z
Configuration: EUT , AC Adapter and Headset
Location: Chamber G
Mode: LTE_16QAM Band 4 Harmonics, 20MHz Bandwidth

f MHz	SG reading (dBm)	Ant. Pol. (H/V)	Distance (m)	Preamp (dB)	Filter (dB)	EIRP (dBm)	Limit (dBm)	Delta (dB)	Notes
Low Ch, 1720									
3440.00	-11.8	V	3.0	36.0	1.0	-46.9	-13.0	-33.9	
5160.00	-11.7	V	3.0	35.4	1.0	-46.1	-13.0	-33.1	
6880.00	-13.4	V	3.0	35.7	1.0	-48.1	-13.0	-35.1	
3440.00	-7.8	H	3.0	36.0	1.0	-42.8	-13.0	-29.8	
5160.00	-12.8	H	3.0	35.4	1.0	-47.2	-13.0	-34.2	
6880.00	-13.8	H	3.0	35.7	1.0	-48.5	-13.0	-35.5	
Mid Ch, 1732.5									
3465.00	-12.2	V	3.0	36.0	1.0	-47.2	-13.0	-34.2	
5197.50	-10.8	V	3.0	35.4	1.0	-45.2	-13.0	-32.2	
6930.00	-15.1	V	3.0	35.7	1.0	-49.7	-13.0	-36.7	
3465.00	-10.5	H	3.0	36.0	1.0	-45.5	-13.0	-32.5	
5197.50	-11.4	H	3.0	35.4	1.0	-45.8	-13.0	-32.8	
6930.00	-12.6	H	3.0	35.7	1.0	-47.3	-13.0	-34.3	
High Ch, 1745									
3490.00	-15.3	V	3.0	36.0	1.0	-50.3	-13.0	-37.3	
5235.00	-12.2	V	3.0	35.4	1.0	-46.6	-13.0	-33.6	
6980.00	-15.0	V	3.0	35.7	1.0	-49.7	-13.0	-36.7	
3490.00	-15.4	H	3.0	36.0	1.0	-50.4	-13.0	-37.4	
5235.00	-16.3	H	3.0	35.4	1.0	-50.8	-13.0	-37.8	
6980.00	-13.4	H	3.0	35.7	1.0	-48.1	-13.0	-35.1	

This report shall not be reproduced except in full, without the written approval of UL Verification Services Inc.

UL Verification Services, Inc.
Above 1GHz High Frequency Substitution Measurement

Company: LG
Project #: 15I20527
Date: 4/20/2015
Test Engineer: R.Z
Configuration: EUT , AC Adapter and Headset
Location: Chamber G
Mode: LTE_QPSK Band 4 Harmonics, 20MHz Bandwidth

Band LTE4 20MHz QPSK

f MHz	SG reading (dBm)	Ant. Pol. (H/V)	Distance (m)	Preamp (dB)	Filter (dB)	EIRP (dBm)	Limit (dBm)	Delta (dB)	Notes
Low Ch, 1720									
3440.00	-9.3	V	3.0	36.0	1.0	-44.4	-13.0	-31.4	
5160.00	-10.5	V	3.0	35.4	1.0	-44.9	-13.0	-31.9	
6880.00	-10.7	V	3.0	35.7	1.0	-45.3	-13.0	-32.3	
3440.00	-6.6	H	3.0	36.0	1.0	-41.6	-13.0	-28.6	
5160.00	-11.7	H	3.0	35.4	1.0	-46.1	-13.0	-33.1	
6880.00	-12.2	H	3.0	35.7	1.0	-46.9	-13.0	-33.9	
Mid Ch, 1732.5									
3465.00	-12.3	V	3.0	36.0	1.0	-47.4	-13.0	-34.4	
5197.50	-9.9	V	3.0	35.4	1.0	-44.3	-13.0	-31.3	
6930.00	-15.0	V	3.0	35.7	1.0	-49.6	-13.0	-36.6	
3465.00	-12.0	H	3.0	36.0	1.0	-47.0	-13.0	-34.0	
5197.50	-11.8	H	3.0	35.4	1.0	-46.3	-13.0	-33.3	
6930.00	-14.0	H	3.0	35.7	1.0	-48.7	-13.0	-35.7	
High Ch, 1745									
3490.00	-14.7	V	3.0	36.0	1.0	-49.7	-13.0	-36.7	
5235.00	-11.8	V	3.0	35.4	1.0	-46.2	-13.0	-33.2	
6980.00	-14.6	V	3.0	35.7	1.0	-49.3	-13.0	-36.3	
3490.00	-15.3	H	3.0	36.0	1.0	-50.3	-13.0	-37.3	
5235.00	-15.8	H	3.0	35.4	1.0	-50.3	-13.0	-37.3	
6980.00	-13.7	H	3.0	35.7	1.0	-48.4	-13.0	-35.4	

This report shall not be reproduced except in full, without the written approval of UL Verification Services Inc.

UL Verification Services, Inc.
Above 1GHz High Frequency Substitution Measurement

Company: LG
Project #: 15I20527
Date: 4/20/2015
Test Engineer: R.Z
Configuration: EUT , AC Adapter and Headset
Location: Chamber G
Mode: LTE_16QAM Band 4 Harmonics, 15MHz Bandwidth

Band
LTE4
15MHz
16QAM

f MHz	SG reading (dBm)	Ant. Pol. (H/V)	Distance (m)	Preamp (dB)	Filter (dB)	EIRP (dBm)	Limit (dBm)	Delta (dB)	Notes
Low Ch, 1717.5									
3435.00	-9.9	V	3.0	36.1	1.0	-45.0	-13.0	-32.0	
5152.50	-11.2	V	3.0	35.4	1.0	-45.6	-13.0	-32.6	
6870.00	-12.0	V	3.0	35.7	1.0	-46.7	-13.0	-33.7	
3435.00	-7.4	H	3.0	36.1	1.0	-42.4	-13.0	-29.4	
5152.50	-12.1	H	3.0	35.4	1.0	-46.5	-13.0	-33.5	
6870.00	-11.8	H	3.0	35.7	1.0	-46.5	-13.0	-33.5	
Mid Ch, 1732.5									
3465.00	-13.4	V	3.0	36.0	1.0	-48.5	-13.0	-35.5	
5197.50	-13.5	V	3.0	35.4	1.0	-47.9	-13.0	-34.9	
6930.00	-15.3	V	3.0	35.7	1.0	-49.9	-13.0	-36.9	
3465.00	-10.8	H	3.0	36.0	1.0	-45.8	-13.0	-32.8	
5197.50	-11.9	H	3.0	35.4	1.0	-46.3	-13.0	-33.3	
6930.00	-14.1	H	3.0	35.7	1.0	-48.8	-13.0	-35.8	
High Ch, 1747.5									
3495.00	-15.2	V	3.0	36.0	1.0	-50.2	-13.0	-37.2	
5242.50	-13.3	V	3.0	35.4	1.0	-47.8	-13.0	-34.8	
6990.00	-14.8	V	3.0	35.7	1.0	-49.5	-13.0	-36.5	
3495.00	-16.2	H	3.0	36.0	1.0	-51.2	-13.0	-38.2	
5242.50	-13.6	H	3.0	35.4	1.0	-48.1	-13.0	-35.1	
6990.00	-13.5	H	3.0	35.7	1.0	-48.2	-13.0	-35.2	

This report shall not be reproduced except in full, without the written approval of UL Verification Services Inc.

Band

LTE4

15MHz

QPSK

UL Verification Services, Inc.
Above 1GHz High Frequency Substitution Measurement

Company: LG
Project #: 15I20527
Date: 4/20/2015
Test Engineer: R.Z
Configuration: EUT , AC Adapter and Headset
Location: Chamber G
Mode: LTE_QPSK Band 4 Harmonics, 15MHz Bandwidth

f MHz	SG reading (dBm)	Ant. Pol. (H/V)	Distance (m)	Preamp (dB)	Filter (dB)	EIRP (dBm)	Limit (dBm)	Delta (dB)	Notes
Low Ch, 1717.5									
3435.00	-9.6	V	3.0	36.1	1.0	-44.7	-13.0	-31.7	
5152.50	-10.2	V	3.0	35.4	1.0	-44.7	-13.0	-31.7	
6870.00	-12.1	V	3.0	35.7	1.0	-46.8	-13.0	-33.8	
3435.00	-7.7	H	3.0	36.1	1.0	-42.7	-13.0	-29.7	
5152.50	-11.1	H	3.0	35.4	1.0	-45.5	-13.0	-32.5	
6870.00	-12.9	H	3.0	35.7	1.0	-47.6	-13.0	-34.6	
Mid Ch, 1732.5									
3465.00	-12.2	V	3.0	36.0	1.0	-47.3	-13.0	-34.3	
5197.50	-9.4	V	3.0	35.4	1.0	-43.8	-13.0	-30.8	
6930.00	-15.7	V	3.0	35.7	1.0	-50.3	-13.0	-37.3	
3465.00	-12.3	H	3.0	36.0	1.0	-47.3	-13.0	-34.3	
5197.50	-12.2	H	3.0	35.4	1.0	-46.6	-13.0	-33.6	
6930.00	-12.3	H	3.0	35.7	1.0	-47.0	-13.0	-34.0	
High Ch, 1747.5									
3495.00	-15.6	V	3.0	36.0	1.0	-50.6	-13.0	-37.6	
5242.50	-12.1	V	3.0	35.4	1.0	-46.5	-13.0	-33.5	
6990.00	-15.2	V	3.0	35.7	1.0	-49.9	-13.0	-36.9	
3495.00	-16.5	H	3.0	36.0	1.0	-51.5	-13.0	-38.5	
5242.50	-10.3	H	3.0	35.4	1.0	-44.8	-13.0	-31.8	
6990.00	-13.4	H	3.0	35.7	1.0	-48.1	-13.0	-35.1	

This report shall not be reproduced except in full, without the written approval of UL Verification Services Inc.

UL Verification Services, Inc.
Above 1GHz High Frequency Substitution Measurement

Company: LG
Project #: 15I20527
Date: 4/20/2015
Test Engineer: R.Z
Configuration: EUT , AC Adapter and Headset
Location: Chamber G
Mode: LTE_16QAM Band 4 Harmonics, 10MHz Bandwidth

Band
LTE4
10MHz
16QAM

f MHz	SG reading (dBm)	Ant. Pol. (H/V)	Distance (m)	Preamp (dB)	Filter (dB)	EIRP (dBm)	Limit (dBm)	Delta (dB)	Notes
Low Ch, 1715									
3430.00	-10.4	V	3.0	36.1	1.0	-45.5	-13.0	-32.5	
5145.00	-12.3	V	3.0	35.4	1.0	-46.8	-13.0	-33.8	
6860.00	-11.9	V	3.0	35.7	1.0	-46.5	-13.0	-33.5	
3430.00	-6.0	H	3.0	36.1	1.0	-41.1	-13.0	-28.1	
5145.00	-13.1	H	3.0	35.4	1.0	-47.6	-13.0	-34.6	
6860.00	-11.7	H	3.0	35.7	1.0	-46.4	-13.0	-33.4	
Mid Ch, 1732.5									
3465.00	-14.2	V	3.0	36.0	1.0	-49.3	-13.0	-36.3	
5197.50	-11.8	V	3.0	35.4	1.0	-46.2	-13.0	-33.2	
6930.00	-13.4	V	3.0	35.7	1.0	-48.0	-13.0	-35.0	
3465.00	-11.5	H	3.0	36.0	1.0	-46.5	-13.0	-33.5	
5197.50	-12.8	H	3.0	35.4	1.0	-47.2	-13.0	-34.2	
6930.00	-12.8	H	3.0	35.7	1.0	-47.5	-13.0	-34.5	
High Ch, 1750									
3500.00	-12.8	V	3.0	36.0	1.0	-47.8	-13.0	-34.8	
5250.00	-12.0	V	3.0	35.4	1.0	-46.5	-13.0	-33.5	
7000.00	-15.1	V	3.0	35.7	1.0	-49.8	-13.0	-36.8	
3500.00	-15.0	H	3.0	36.0	1.0	-50.0	-13.0	-37.0	
5250.00	-13.2	H	3.0	35.4	1.0	-47.6	-13.0	-34.6	
7000.00	-11.9	H	3.0	35.7	1.0	-46.6	-13.0	-33.6	

This report shall not be reproduced except in full, without the written approval of UL Verification Services Inc.

UL Verification Services, Inc.
Above 1GHz High Frequency Substitution Measurement

Company: LG
Project #: 15I20527
Date: 4/20/2015
Test Engineer: R.Z
Configuration: EUT , AC Adapter and Headset
Location: Chamber G
Mode: LTE_QPSK Band 4 Harmonics, 10MHz Bandwidth

Band LTE4 10MHz QPSK

f MHz	SG reading (dBm)	Ant. Pol. (H/V)	Distance (m)	Preamp (dB)	Filter (dB)	EIRP (dBm)	Limit (dBm)	Delta (dB)	Notes
Low Ch, 1715									
3430.00	-9.4	V	3.0	36.1	1.0	-44.5	-13.0	-31.5	
5145.00	-10.9	V	3.0	35.4	1.0	-45.4	-13.0	-32.4	
6860.00	-13.8	V	3.0	35.7	1.0	-48.5	-13.0	-35.5	
3430.00	-7.1	H	3.0	36.1	1.0	-42.2	-13.0	-29.2	
5145.00	-11.5	H	3.0	35.4	1.0	-45.9	-13.0	-32.9	
6860.00	-12.2	H	3.0	35.7	1.0	-46.8	-13.0	-33.8	
Mid Ch, 1732.5									
3465.00	-11.4	V	3.0	36.0	1.0	-46.5	-13.0	-33.5	
5197.50	-9.9	V	3.0	35.4	1.0	-44.3	-13.0	-31.3	
6930.00	-13.5	V	3.0	35.7	1.0	-48.2	-13.0	-35.2	
3465.00	-11.4	H	3.0	36.0	1.0	-46.5	-13.0	-33.5	
5197.50	-10.9	H	3.0	35.4	1.0	-45.3	-13.0	-32.3	
6930.00	-12.2	H	3.0	35.7	1.0	-46.9	-13.0	-33.9	
High Ch, 1750									
3500.00	-14.1	V	3.0	36.0	1.0	-49.1	-13.0	-36.1	
5250.00	-10.7	V	3.0	35.4	1.0	-45.1	-13.0	-32.1	
7000.00	-15.2	V	3.0	35.7	1.0	-49.9	-13.0	-36.9	
3500.00	-13.8	H	3.0	36.0	1.0	-48.8	-13.0	-35.8	
5250.00	-12.3	H	3.0	35.4	1.0	-46.7	-13.0	-33.7	
7000.00	-11.6	H	3.0	35.7	1.0	-46.3	-13.0	-33.3	

This report shall not be reproduced except in full, without the written approval of UL Verification Services Inc.

UL Verification Services, Inc.
Above 1GHz High Frequency Substitution Measurement

Company: LG
Project #: 15I20527
Date: 4/21/2015
Test Engineer: R.Z
Configuration: EUT , AC Adapter and Headset
Location: Chamber G
Mode: LTE_16QAM Band 4 Harmonics, 5MHz Bandwidth

Band
LTE4
5MHz
16QAM

f MHz	SG reading (dBm)	Ant. Pol. (H/V)	Distance (m)	Preamp (dB)	Filter (dB)	EIRP (dBm)	Limit (dBm)	Delta (dB)	Notes
Low Ch, 1712.5									
3425.00	-10.6	V	3.0	36.1	1.0	-45.7	-13.0	-32.7	
5137.50	-10.0	V	3.0	35.4	1.0	-44.4	-13.0	-31.4	
6850.00	-15.4	V	3.0	35.7	1.0	-50.0	-13.0	-37.0	
3425.00	-8.4	H	3.0	36.1	1.0	-43.4	-13.0	-30.4	
5137.50	-12.8	H	3.0	35.4	1.0	-47.2	-13.0	-34.2	
6850.00	-12.8	H	3.0	35.7	1.0	-47.4	-13.0	-34.4	
Mid Ch, 1732.5									
3465.00	-15.2	V	3.0	36.0	1.0	-50.3	-13.0	-37.3	
5197.50	-11.0	V	3.0	35.4	1.0	-45.4	-13.0	-32.4	
6930.00	-14.8	V	3.0	35.7	1.0	-49.4	-13.0	-36.4	
3465.00	-13.2	H	3.0	36.0	1.0	-48.3	-13.0	-35.3	
5197.50	-12.0	H	3.0	35.4	1.0	-46.4	-13.0	-33.4	
6930.00	-11.9	H	3.0	35.7	1.0	-46.6	-13.0	-33.6	
High Ch, 1752.5									
3505.00	-13.1	V	3.0	36.0	1.0	-48.1	-13.0	-35.1	
5257.50	-9.0	V	3.0	35.4	1.0	-43.5	-13.0	-30.5	
7010.00	-14.2	V	3.0	35.7	1.0	-48.9	-13.0	-35.9	
3505.00	-14.4	H	3.0	36.0	1.0	-49.4	-13.0	-36.4	
5257.50	-10.6	H	3.0	35.4	1.0	-45.0	-13.0	-32.0	
7010.00	-14.0	H	3.0	35.7	1.0	-48.7	-13.0	-35.7	

This report shall not be reproduced except in full, without the written approval of UL Verification Services Inc.

UL Verification Services, Inc.
Above 1GHz High Frequency Substitution Measurement

Company: LG
Project #: 15I20527
Date: 4/21/2015
Test Engineer: R.Z
Configuration: EUT , AC Adapter and Headset
Location: Chamber G
Mode: LTE_QPSK Band 4 Harmonics, 5MHz Bandwidth

Band LTE4 5MHz QPSK

f MHz	SG reading (dBm)	Ant. Pol. (H/V)	Distance (m)	Preamp (dB)	Filter (dB)	EIRP (dBm)	Limit (dBm)	Delta (dB)	Notes
Low Ch, 1712.5									
3425.00	-7.2	V	3.0	36.1	1.0	-42.3	-13.0	-29.3	
5137.50	-12.8	V	3.0	35.4	1.0	-47.3	-13.0	-34.3	
6850.00	-13.2	V	3.0	35.7	1.0	-47.8	-13.0	-34.8	
3425.00	-6.0	H	3.0	36.1	1.0	-41.1	-13.0	-28.1	
5137.50	-9.8	H	3.0	35.4	1.0	-44.2	-13.0	-31.2	
6850.00	-10.1	H	3.0	35.7	1.0	-44.8	-13.0	-31.8	
Mid Ch, 1732.5									
3465.00	-13.6	V	3.0	36.0	1.0	-48.7	-13.0	-35.7	
5197.50	-11.1	V	3.0	35.4	1.0	-45.5	-13.0	-32.5	
6930.00	-13.8	V	3.0	35.7	1.0	-48.4	-13.0	-35.4	
3465.00	-13.4	H	3.0	36.0	1.0	-48.5	-13.0	-35.5	
5197.50	-12.8	H	3.0	35.4	1.0	-47.2	-13.0	-34.2	
6930.00	-11.1	H	3.0	35.7	1.0	-45.8	-13.0	-32.8	
High Ch, 1752.5									
3505.00	-14.0	V	3.0	36.0	1.0	-49.0	-13.0	-36.0	
5257.50	-10.2	V	3.0	35.4	1.0	-44.7	-13.0	-31.7	
7010.00	-14.6	V	3.0	35.7	1.0	-49.3	-13.0	-36.3	
3505.00	-14.5	H	3.0	36.0	1.0	-49.5	-13.0	-36.5	
5257.50	-11.4	H	3.0	35.4	1.0	-45.8	-13.0	-32.8	
7010.00	-13.2	H	3.0	35.7	1.0	-47.9	-13.0	-34.9	

This report shall not be reproduced except in full, without the written approval of UL Verification Services Inc.

UL Verification Services, Inc.
Above 1GHz High Frequency Substitution Measurement

Company: LG
Project #: 15I20527
Date: 4/21/2015
Test Engineer: R.Z
Configuration: EUT , AC Adapter and Headset
Location: Chamber G
Mode: LTE_16QAM Band 4 Harmonics, 3MHz Bandwidth

Band
LTE4
3MHz
16QAM

f MHz	SG reading (dBm)	Ant. Pol. (H/V)	Distance (m)	Preamp (dB)	Filter (dB)	EIRP (dBm)	Limit (dBm)	Delta (dB)	Notes
Low Ch, 1711.5									
3423.00	-8.7	V	3.0	36.1	1.0	-43.7	-13.0	-30.7	
5134.50	-10.6	V	3.0	35.4	1.0	-45.0	-13.0	-32.0	
6846.00	-10.6	V	3.0	35.7	1.0	-45.2	-13.0	-32.2	
3423.00	-4.7	H	3.0	36.1	1.0	-39.8	-13.0	-26.8	
5134.50	-11.2	H	3.0	35.4	1.0	-45.6	-13.0	-32.6	
6846.00	-13.8	H	3.0	35.7	1.0	-48.4	-13.0	-35.4	
Mid Ch, 1732.5									
3465.00	-13.1	V	3.0	36.0	1.0	-48.2	-13.0	-35.2	
5197.50	-10.5	V	3.0	35.4	1.0	-44.9	-13.0	-31.9	
6930.00	-14.7	V	3.0	35.7	1.0	-49.3	-13.0	-36.3	
3465.00	-12.5	H	3.0	36.0	1.0	-47.5	-13.0	-34.5	
5197.50	-12.5	H	3.0	35.4	1.0	-46.9	-13.0	-33.9	
6930.00	-13.5	H	3.0	35.7	1.0	-48.2	-13.0	-35.2	
High Ch, 1753.5									
3507.00	-12.8	V	3.0	36.0	1.0	-47.8	-13.0	-34.8	
5260.50	-8.3	V	3.0	35.4	1.0	-42.7	-13.0	-29.7	
7014.00	-14.6	V	3.0	35.7	1.0	-49.3	-13.0	-36.3	
3507.00	-14.8	H	3.0	36.0	1.0	-49.8	-13.0	-36.8	
5260.50	-10.9	H	3.0	35.4	1.0	-45.4	-13.0	-32.4	
7014.00	-11.5	H	3.0	35.7	1.0	-46.2	-13.0	-33.2	

This report shall not be reproduced except in full, without the written approval of UL Verification Services Inc.

UL Verification Services, Inc.
Above 1GHz High Frequency Substitution Measurement

Company: LG
Project #: 15I20527
Date: 4/21/2015
Test Engineer: R.Z
Configuration: EUT , AC Adapter and Headset
Location: Chamber G
Mode: LTE_QPSK Band 4 Harmonics, 3MHz Bandwidth

Band LTE4 3MHz QPSK

f MHz	SG reading (dBm)	Ant. Pol. (H/V)	Distance (m)	Preamp (dB)	Filter (dB)	EIRP (dBm)	Limit (dBm)	Delta (dB)	Notes
Low Ch, 1711.5									
3423.00	-9.7	V	3.0	36.1	1.0	-44.7	-13.0	-31.7	
5134.50	-12.2	V	3.0	35.4	1.0	-46.6	-13.0	-33.6	
6846.00	-11.8	V	3.0	35.7	1.0	-46.4	-13.0	-33.4	
3423.00	-6.2	H	3.0	36.1	1.0	-41.2	-13.0	-28.2	
5134.50	-9.6	H	3.0	35.4	1.0	-44.0	-13.0	-31.0	
6846.00	-11.1	H	3.0	35.7	1.0	-45.7	-13.0	-32.7	
Mid Ch, 1732.5									
3465.00	-12.7	V	3.0	36.0	1.0	-47.8	-13.0	-34.8	
5197.50	-12.8	V	3.0	35.4	1.0	-47.3	-13.0	-34.3	
6930.00	-15.1	V	3.0	35.7	1.0	-49.7	-13.0	-36.7	
3465.00	-13.8	H	3.0	36.0	1.0	-48.8	-13.0	-35.8	
5197.50	-12.2	H	3.0	35.4	1.0	-46.6	-13.0	-33.6	
6930.00	-12.2	H	3.0	35.7	1.0	-46.9	-13.0	-33.9	
High Ch, 1753.5									
3507.00	-12.2	V	3.0	36.0	1.0	-47.2	-13.0	-34.2	
5260.50	-9.7	V	3.0	35.4	1.0	-44.1	-13.0	-31.1	
7014.00	-12.2	V	3.0	35.7	1.0	-46.9	-13.0	-33.9	
3507.00	-13.3	H	3.0	36.0	1.0	-48.3	-13.0	-35.3	
5260.50	-10.5	H	3.0	35.4	1.0	-44.9	-13.0	-31.9	
7014.00	-10.0	H	3.0	35.7	1.0	-44.7	-13.0	-31.7	

This report shall not be reproduced except in full, without the written approval of UL Verification Services Inc.

UL Verification Services, Inc.
Above 1GHz High Frequency Substitution Measurement

Company: LG
Project #: 15I20527
Date: 4/21/2015
Test Engineer: R.Z
Configuration: EUT , AC Adapter and Headset
Location: Chamber G
Mode: LTE_16QAM Band 4 Harmonics, 1.4MHz Bandwidth

Band
LTE4
1.4MHz
16QAM

f MHz	SG reading (dBm)	Ant. Pol. (H/V)	Distance (m)	Preamp (dB)	Filter (dB)	EIRP (dBm)	Limit (dBm)	Delta (dB)	Notes
Low Ch, 1710.7									
3421.40	-17.0	V	3.0	36.1	1.0	-52.0	-13.0	-39.0	
5132.10	-13.9	V	3.0	35.4	1.0	-48.3	-13.0	-35.3	
6842.80	-14.7	V	3.0	35.7	1.0	-49.3	-13.0	-36.3	
3421.40	-13.0	H	3.0	36.1	1.0	-48.0	-13.0	-35.0	
5132.10	-15.8	H	3.0	35.4	1.0	-50.2	-13.0	-37.2	
6842.80	-13.6	H	3.0	35.7	1.0	-48.2	-13.0	-35.2	
Mid Ch, 1732.5									
3465.00	-13.3	V	3.0	36.0	1.0	-48.4	-13.0	-35.4	
5197.50	-11.0	V	3.0	35.4	1.0	-45.4	-13.0	-32.4	
6930.00	-12.7	V	3.0	35.7	1.0	-47.4	-13.0	-34.4	
3465.00	-13.5	H	3.0	36.0	1.0	-48.5	-13.0	-35.5	
5197.50	-12.1	H	3.0	35.4	1.0	-46.5	-13.0	-33.5	
6930.00	-11.1	H	3.0	35.7	1.0	-45.8	-13.0	-32.8	
High Ch, 1754.3									
3508.60	-19.5	V	3.0	36.0	1.0	-54.5	-13.0	-41.5	
5262.90	-16.1	V	3.0	35.4	1.0	-50.6	-13.0	-37.6	
7017.20	-14.8	V	3.0	35.7	1.0	-49.5	-13.0	-36.5	
3508.60	-18.7	H	3.0	36.0	1.0	-53.7	-13.0	-40.7	
5262.90	-15.9	H	3.0	35.4	1.0	-50.3	-13.0	-37.3	
7017.20	-12.6	H	3.0	35.7	1.0	-47.3	-13.0	-34.3	

This report shall not be reproduced except in full, without the written approval of UL Verification Services Inc.

UL Verification Services, Inc.
Above 1GHz High Frequency Substitution Measurement

Company: LG
Project #: 15I20527
Date: 4/21/2015
Test Engineer: R.Z
Configuration: EUT , AC Adapter and Headset
Location: Chamber G
Mode: LTE_QPSK Band 4 Harmonics, 1.4MHz Bandwidth

Band LTE4 1.4MHz QPSK

f MHz	SG reading (dBm)	Ant. Pol. (H/V)	Distance (m)	Preamp (dB)	Filter (dB)	EIRP (dBm)	Limit (dBm)	Delta (dB)	Notes
Low Ch, 1710.7									
3421.40	-17.9	V	3.0	36.1	1.0	-52.9	-13.0	-39.9	
5132.10	-13.3	V	3.0	35.4	1.0	-47.8	-13.0	-34.8	
6842.80	-15.4	V	3.0	35.7	1.0	-50.0	-13.0	-37.0	
3421.40	-14.7	H	3.0	36.1	1.0	-49.8	-13.0	-36.8	
5132.10	-15.0	H	3.0	35.4	1.0	-49.4	-13.0	-36.4	
6842.80	-13.6	H	3.0	35.7	1.0	-48.2	-13.0	-35.2	
Mid Ch, 1732.5									
3465.00	-14.3	V	3.0	36.0	1.0	-49.4	-13.0	-36.4	
5197.50	-11.9	V	3.0	35.4	1.0	-46.3	-13.0	-33.3	
6930.00	-14.4	V	3.0	35.7	1.0	-49.0	-13.0	-36.0	
3465.00	-13.2	H	3.0	36.0	1.0	-48.2	-13.0	-35.2	
5197.50	-12.7	H	3.0	35.4	1.0	-47.1	-13.0	-34.1	
6930.00	-12.3	H	3.0	35.7	1.0	-47.0	-13.0	-34.0	
High Ch, 1754.3									
3508.60	-19.8	V	3.0	36.0	1.0	-54.8	-13.0	-41.8	
5262.90	-16.5	V	3.0	35.4	1.0	-51.0	-13.0	-38.0	
7017.20	-15.0	V	3.0	35.7	1.0	-49.7	-13.0	-36.7	
3508.60	-17.3	H	3.0	36.0	1.0	-52.3	-13.0	-39.3	
5262.90	-15.9	H	3.0	35.4	1.0	-50.3	-13.0	-37.3	
7017.20	-13.5	H	3.0	35.7	1.0	-48.2	-13.0	-35.2	

This report shall not be reproduced except in full, without the written approval of UL Verification Services Inc.

LTE Band 5

UL Verification Services, Inc.
Above 1GHz High Frequency Substitution Measurement

Company: LG Electronics
Project #: 15I20527
Date: 4/22/2015
Test Engineer: R.Z
Configuration: EUT/ AC Charger/ Headset
Location: Chamber G
Mode: LTE_16QAM Band 5 Harmonics, 10MHz Bandwidth

Band LTE5 10MHz 16QAM

f MHz	SG reading (dBm)	Ant. Pol. (H/V)	Distance (m)	Preamp (dB)	Filter (dB)	EIRP (dBm)	Limit (dBm)	Delta (dB)	Notes
Low Ch, 829									
1658.00	-17.8	V	3.0	37.0	1.0	-53.8	-13.0	-40.8	
2487.00	-23.1	V	3.0	36.4	1.0	-58.5	-13.0	-45.5	
3316.00	-20.9	V	3.0	36.2	1.0	-56.1	-13.0	-43.1	
1658.00	-19.9	H	3.0	37.0	1.0	-55.9	-13.0	-42.9	
2487.00	-25.0	H	3.0	36.4	1.0	-60.5	-13.0	-47.5	
3316.00	-22.1	H	3.0	36.2	1.0	-57.3	-13.0	-44.3	
Mid Ch, 836.5									
1673.00	-19.1	V	3.0	37.0	1.0	-55.1	-13.0	-42.1	
2509.50	-21.8	V	3.0	36.4	1.0	-57.2	-13.0	-44.2	
3346.00	-20.5	V	3.0	36.1	1.0	-55.6	-13.0	-42.6	
1673.00	-20.6	H	3.0	37.0	1.0	-56.6	-13.0	-43.6	
2509.50	-24.1	H	3.0	36.4	1.0	-59.5	-13.0	-46.5	
3346.00	-20.8	H	3.0	36.1	1.0	-55.9	-13.0	-42.9	
High Ch, 844									
1688.00	-24.5	V	3.0	37.0	1.0	-60.4	-13.0	-47.4	
2532.00	-23.8	V	3.0	36.4	1.0	-59.2	-13.0	-46.2	
3376.00	-20.8	V	3.0	36.1	1.0	-55.9	-13.0	-42.9	
1688.00	-23.8	H	3.0	37.0	1.0	-59.8	-13.0	-46.8	
2532.00	-26.0	H	3.0	36.4	1.0	-61.5	-13.0	-48.5	
3376.00	-21.9	H	3.0	36.1	1.0	-57.0	-13.0	-44.0	

This report shall not be reproduced except in full, without the written approval of UL Verification Services Inc.

UL Verification Services, Inc.
Above 1GHz High Frequency Substitution Measurement

Company: LG Electronics
Project #: 15I20527
Date: 4/22/2015
Test Engineer: R.Z
Configuration: EUT/ AC Charger/ Headset
Location: Chamber G
Mode: LTE_QPSK Band 5 Harmonics, 10MHz Bandwidth

Band LTE5 10MHz QPSK

f MHz	SG reading (dBm)	Ant. Pol. (H/V)	Distance (m)	Preamp (dB)	Filter (dB)	EIRP (dBm)	Limit (dBm)	Delta (dB)	Notes
Low Ch, 829									
1658.00	-16.9	V	3.0	37.0	1.0	-53.0	-13.0	-40.0	
2487.00	-23.8	V	3.0	36.4	1.0	-59.2	-13.0	-46.2	
3316.00	-21.9	V	3.0	36.2	1.0	-57.1	-13.0	-44.1	
1658.00	-20.5	H	3.0	37.0	1.0	-56.5	-13.0	-43.5	
2487.00	-24.5	H	3.0	36.4	1.0	-59.9	-13.0	-46.9	
3316.00	-21.6	H	3.0	36.2	1.0	-56.8	-13.0	-43.8	
Mid Ch, 836.5									
1673.00	-19.3	V	3.0	37.0	1.0	-55.3	-13.0	-42.3	
2509.50	-20.8	V	3.0	36.4	1.0	-56.2	-13.0	-43.2	
3346.00	-19.8	V	3.0	36.1	1.0	-55.0	-13.0	-42.0	
1673.00	-21.4	H	3.0	37.0	1.0	-57.4	-13.0	-44.4	
2509.50	-22.6	H	3.0	36.4	1.0	-58.0	-13.0	-45.0	
3346.00	-20.3	H	3.0	36.1	1.0	-55.4	-13.0	-42.4	
High Ch, 844									
1688.00	-22.8	V	3.0	37.0	1.0	-58.8	-13.0	-45.8	
2532.00	-23.2	V	3.0	36.4	1.0	-58.6	-13.0	-45.6	
3376.00	-20.9	V	3.0	36.1	1.0	-56.0	-13.0	-43.0	
1688.00	-23.2	H	3.0	37.0	1.0	-59.2	-13.0	-46.2	
2532.00	-23.5	H	3.0	36.4	1.0	-59.0	-13.0	-46.0	
3376.00	-20.5	H	3.0	36.1	1.0	-55.6	-13.0	-42.6	

This report shall not be reproduced except in full, without the written approval of UL Verification Services Inc.

UL Verification Services, Inc.
Above 1GHz High Frequency Substitution Measurement

Company: LG Electronics
Project #: 15I20527
Date: 4/22/2015
Test Engineer: R.Z
Configuration: EUT/ AC Charger/ Headset
Location: Chamber G
Mode: LTE_16QAM Band 5 Harmonics, 5MHz Bandwidth

Band LTE5 5MHz 16QAM

f MHz	SG reading (dBm)	Ant. Pol. (H/V)	Distance (m)	Preamp (dB)	Filter (dB)	EIRP (dBm)	Limit (dBm)	Delta (dB)	Notes
Low Ch, 826.5									
1653.00	-21.0	V	3.0	37.0	1.0	-57.0	-13.0	-44.0	
2479.50	-20.6	V	3.0	36.4	1.0	-56.1	-13.0	-43.1	
3306.00	-21.5	V	3.0	36.2	1.0	-56.6	-13.0	-43.6	
1653.00	-23.6	H	3.0	37.0	1.0	-59.7	-13.0	-46.7	
2479.50	-24.5	H	3.0	36.4	1.0	-60.0	-13.0	-47.0	
3306.00	-21.8	H	3.0	36.2	1.0	-57.0	-13.0	-44.0	
Mid Ch, 836.5									
1673.00	-21.2	V	3.0	37.0	1.0	-57.2	-13.0	-44.2	
2509.50	-23.1	V	3.0	36.4	1.0	-58.5	-13.0	-45.5	
3346.00	-21.0	V	3.0	36.1	1.0	-56.1	-13.0	-43.1	
1673.00	-19.2	H	3.0	37.0	1.0	-55.2	-13.0	-42.2	
2509.50	-25.2	H	3.0	36.4	1.0	-60.6	-13.0	-47.6	
3346.00	-21.8	H	3.0	36.1	1.0	-56.9	-13.0	-43.9	
High Ch, 846.5									
1693.00	-22.6	V	3.0	37.0	1.0	-58.6	-13.0	-45.6	
2539.50	-23.3	V	3.0	36.4	1.0	-58.8	-13.0	-45.8	
3386.00	-21.7	V	3.0	36.1	1.0	-56.8	-13.0	-43.8	
1693.00	-21.6	H	3.0	37.0	1.0	-57.6	-13.0	-44.6	
2539.50	-25.5	H	3.0	36.4	1.0	-60.9	-13.0	-47.9	
3386.00	-20.9	H	3.0	36.1	1.0	-55.9	-13.0	-42.9	

This report shall not be reproduced except in full, without the written approval of UL Verification Services Inc.

UL Verification Services, Inc.
Above 1GHz High Frequency Substitution Measurement

Company: LG Electronics
Project #: 15I20527
Date: 4/22/2015
Test Engineer: R.Z
Configuration: EUT/ AC Charger/ Headset
Location: Chamber G
Mode: LTE_QPSK Band 5 Harmonics, 5MHz Bandwidth

Band LTE5 5MHz QPSK

f MHz	SG reading (dBm)	Ant. Pol. (H/V)	Distance (m)	Preamp (dB)	Filter (dB)	EIRP (dBm)	Limit (dBm)	Delta (dB)	Notes
Low Ch, 826.5									
1653.00	-20.2	V	3.0	37.0	1.0	-56.2	-13.0	-43.2	
2479.50	-23.2	V	3.0	36.4	1.0	-58.7	-13.0	-45.7	
3306.00	-22.4	V	3.0	36.2	1.0	-57.5	-13.0	-44.5	
1653.00	-22.3	H	3.0	37.0	1.0	-58.4	-13.0	-45.4	
2479.50	-23.0	H	3.0	36.4	1.0	-58.4	-13.0	-45.4	
3306.00	-21.9	H	3.0	36.2	1.0	-57.0	-13.0	-44.0	
Mid Ch, 836.5									
1673.00	-21.5	V	3.0	37.0	1.0	-57.5	-13.0	-44.5	
2509.50	-21.9	V	3.0	36.4	1.0	-57.3	-13.0	-44.3	
3346.00	-19.4	V	3.0	36.1	1.0	-54.5	-13.0	-41.5	
1673.00	-19.6	H	3.0	37.0	1.0	-55.6	-13.0	-42.6	
2509.50	-24.9	H	3.0	36.4	1.0	-60.3	-13.0	-47.3	
3346.00	-22.7	H	3.0	36.1	1.0	-57.8	-13.0	-44.8	
High Ch, 846.5									
1693.00	-19.6	V	3.0	37.0	1.0	-55.6	-13.0	-42.6	
2539.50	-23.5	V	3.0	36.4	1.0	-59.0	-13.0	-46.0	
3386.00	-20.9	V	3.0	36.1	1.0	-55.9	-13.0	-42.9	
1693.00	-20.9	H	3.0	37.0	1.0	-56.9	-13.0	-43.9	
2539.50	-25.0	H	3.0	36.4	1.0	-60.4	-13.0	-47.4	
3386.00	-21.8	H	3.0	36.1	1.0	-56.9	-13.0	-43.9	

This report shall not be reproduced except in full, without the written approval of UL Verification Services Inc.

UL Verification Services, Inc.
Above 1GHz High Frequency Substitution Measurement

Company: LG Electronics
Project #: 15I20527
Date: 4/22/2015
Test Engineer: R.Z
Configuration: EUT/ AC Charger/ Headset
Location: Chamber G
Mode: LTE_16QAM Band 5 Harmonics, 3MHz Bandwidth

Band
LTE5
3MHz
16QAM

f MHz	SG reading (dBm)	Ant. Pol. (H/V)	Distance (m)	Preamp (dB)	Filter (dB)	EIRP (dBm)	Limit (dBm)	Delta (dB)	Notes
Low Ch, 825.5									
1651.00	-18.7	V	3.0	37.0	1.0	-54.7	-13.0	-41.7	
2476.50	-23.6	V	3.0	36.4	1.0	-59.0	-13.0	-46.0	
3302.00	108.3	V	3.0	36.2	1.0	73.1	-13.0	86.1	
1651.00	-20.7	H	3.0	37.0	1.0	-56.8	-13.0	-43.8	
2476.50	-24.9	H	3.0	36.4	1.0	-60.3	-13.0	-47.3	
3302.00	-22.2	H	3.0	36.2	1.0	-57.4	-13.0	-44.4	
Mid Ch, 836.5									
1673.00	-19.1	V	3.0	37.0	1.0	-55.1	-13.0	-42.1	
2509.50	-23.1	V	3.0	36.4	1.0	-58.5	-13.0	-45.5	
3346.00	-21.9	V	3.0	36.1	1.0	-57.0	-13.0	-44.0	
1673.00	-19.5	H	3.0	37.0	1.0	-55.5	-13.0	-42.5	
2509.50	-24.6	H	3.0	36.4	1.0	-60.0	-13.0	-47.0	
3346.00	-21.5	H	3.0	36.1	1.0	-56.6	-13.0	-43.6	
High Ch, 847.5									
1695.00	-22.0	V	3.0	37.0	1.0	-58.0	-13.0	-45.0	
2542.50	-24.4	V	3.0	36.4	1.0	-59.8	-13.0	-46.8	
3390.00	-22.7	V	3.0	36.1	1.0	-57.8	-13.0	-44.8	
1695.00	-23.3	H	3.0	37.0	1.0	-59.3	-13.0	-46.3	
2542.50	-25.0	H	3.0	36.4	1.0	-60.5	-13.0	-47.5	
3390.00	-22.6	H	3.0	36.1	1.0	-57.7	-13.0	-44.7	

This report shall not be reproduced except in full, without the written approval of UL Verification Services Inc.

UL Verification Services, Inc.
Above 1GHz High Frequency Substitution Measurement

Company: LG Electronics
Project #: 15I20527
Date: 4/22/2015
Test Engineer: R.Z
Configuration: EUT/ AC Charger/ Headset
Location: Chamber G
Mode: LTE_QPSK Band 5 Harmonics, 3MHz Bandwidth

Band LTE5 3MHz QPSK

f MHz	SG reading (dBm)	Ant. Pol. (H/V)	Distance (m)	Preamp (dB)	Filter (dB)	EIRP (dBm)	Limit (dBm)	Delta (dB)	Notes
Low Ch, 825.5									
1651.00	-19.4	V	3.0	37.0	1.0	-55.5	-13.0	-42.5	
2476.50	-24.3	V	3.0	36.4	1.0	-59.7	-13.0	-46.7	
3302.00	-22.0	V	3.0	36.2	1.0	-57.2	-13.0	-44.2	
1651.00	-24.3	H	3.0	37.0	1.0	-60.4	-13.0	-47.4	
2476.50	-24.2	H	3.0	36.4	1.0	-59.6	-13.0	-46.6	
3302.00	-21.0	H	3.0	36.2	1.0	-56.2	-13.0	-43.2	
Mid Ch, 836.5									
1673.00	-22.5	V	3.0	37.0	1.0	-58.5	-13.0	-45.5	
2509.50	-23.9	V	3.0	36.4	1.0	-59.3	-13.0	-46.3	
3346.00	-21.8	V	3.0	36.1	1.0	-57.0	-13.0	-44.0	
1673.00	-22.2	H	3.0	37.0	1.0	-58.2	-13.0	-45.2	
2509.50	-25.1	H	3.0	36.4	1.0	-60.5	-13.0	-47.5	
3346.00	-22.1	H	3.0	36.1	1.0	-57.2	-13.0	-44.2	
High Ch, 847.5									
1695.00	-19.9	V	3.0	37.0	1.0	-55.9	-13.0	-42.9	
2542.50	-24.0	V	3.0	36.4	1.0	-59.5	-13.0	-46.5	
3390.00	-22.0	V	3.0	36.1	1.0	-57.1	-13.0	-44.1	
1695.00	-20.8	H	3.0	37.0	1.0	-56.8	-13.0	-43.8	
2542.50	-25.8	H	3.0	36.4	1.0	-61.2	-13.0	-48.2	
3390.00	-23.0	H	3.0	36.1	1.0	-58.1	-13.0	-45.1	

This report shall not be reproduced except in full, without the written approval of UL Verification Services Inc.

UL Verification Services, Inc.
Above 1GHz High Frequency Substitution Measurement

Company: LG Electronics
Project #: 15I20527
Date: 4/22/2015
Test Engineer: R.Z
Configuration: EUT/ AC Charger/ Headset
Location: Chamber G
Mode: LTE_16QAM Band 5 Harmonics, 1.4MHz Bandwidth

Band LTE5 1.4MHz 16QAM

f MHz	SG reading (dBm)	Ant. Pol. (H/V)	Distance (m)	Preamp (dB)	Filter (dB)	EIRP (dBm)	Limit (dBm)	Delta (dB)	Notes
Low Ch, 824.7									
1649.40	-20.2	V	3.0	37.1	1.0	-56.3	-13.0	-43.3	
2474.10	-23.8	V	3.0	36.4	1.0	-59.2	-13.0	-46.2	
3298.80	-21.8	V	3.0	36.2	1.0	-57.0	-13.0	-44.0	
1649.40	-21.5	H	3.0	37.1	1.0	-57.6	-13.0	-44.6	
2474.10	-21.9	H	3.0	36.4	1.0	-57.4	-13.0	-44.4	
3298.80	-22.1	H	3.0	36.2	1.0	-57.3	-13.0	-44.3	
Mid Ch, 836.5									
1673.00	-22.2	V	3.0	37.0	1.0	-58.2	-13.0	-45.2	
2509.50	-23.9	V	3.0	36.4	1.0	-59.3	-13.0	-46.3	
3346.00	-21.6	V	3.0	36.1	1.0	-56.7	-13.0	-43.7	
1673.00	-20.8	H	3.0	37.0	1.0	-56.8	-13.0	-43.8	
2509.50	-26.0	H	3.0	36.4	1.0	-61.4	-13.0	-48.4	
3346.00	-22.0	H	3.0	36.1	1.0	-57.2	-13.0	-44.2	
High Ch, 848.3									
1696.60	-20.2	V	3.0	37.0	1.0	-56.2	-13.0	-43.2	
2544.90	-24.0	V	3.0	36.4	1.0	-59.4	-13.0	-46.4	
3393.20	-20.5	V	3.0	36.1	1.0	-55.6	-13.0	-42.6	
1696.60	-20.5	H	3.0	37.0	1.0	-56.5	-13.0	-43.5	
2544.90	-24.9	H	3.0	36.4	1.0	-60.3	-13.0	-47.3	
3393.20	-21.9	H	3.0	36.1	1.0	-57.0	-13.0	-44.0	

This report shall not be reproduced except in full, without the written approval of UL Verification Services Inc.

UL Verification Services, Inc.
Above 1GHz High Frequency Substitution Measurement

Company: LG Electronics
Project #: 15I20527
Date: 4/22/2015
Test Engineer: R.Z
Configuration: EUT/ AC Charger/ Headset
Location: Chamber G
Mode: LTE_QPSK Band 5 Harmonics, 1.4MHz Bandwidth

Band LTE5 1.4MHz QPSK

f MHz	SG reading (dBm)	Ant. Pol. (H/V)	Distance (m)	Preamp (dB)	Filter (dB)	EIRP (dBm)	Limit (dBm)	Delta (dB)	Notes
Low Ch, 824.7									
1649.40	-23.7	V	3.0	37.1	1.0	-59.8	-13.0	-46.8	
2474.10	-23.5	V	3.0	36.4	1.0	-58.9	-13.0	-45.9	
3298.80	-21.6	V	3.0	36.2	1.0	-56.8	-13.0	-43.8	
1649.40	-22.9	H	3.0	37.1	1.0	-59.0	-13.0	-46.0	
2474.10	-24.9	H	3.0	36.4	1.0	-60.4	-13.0	-47.4	
3298.80	-21.4	H	3.0	36.2	1.0	-56.6	-13.0	-43.6	
Mid Ch, 836.5									
1673.00	-22.0	V	3.0	37.0	1.0	-58.0	-13.0	-45.0	
2509.50	-23.3	V	3.0	36.4	1.0	-58.7	-13.0	-45.7	
3346.00	-22.8	V	3.0	36.1	1.0	-57.9	-13.0	-44.9	
1673.00	-20.5	H	3.0	37.0	1.0	-56.5	-13.0	-43.5	
2509.50	-26.7	H	3.0	36.4	1.0	-62.1	-13.0	-49.1	
3346.00	-22.0	H	3.0	36.1	1.0	-57.1	-13.0	-44.1	
High Ch, 848.3									
1696.60	-19.6	V	3.0	37.0	1.0	-55.6	-13.0	-42.6	
2544.90	-23.9	V	3.0	36.4	1.0	-59.3	-13.0	-46.3	
3393.20	-22.0	V	3.0	36.1	1.0	-57.0	-13.0	-44.0	
1696.60	-18.4	H	3.0	37.0	1.0	-54.4	-13.0	-41.4	
2544.90	-26.1	H	3.0	36.4	1.0	-61.5	-13.0	-48.5	
3393.20	-22.1	H	3.0	36.1	1.0	-57.2	-13.0	-44.2	

This report shall not be reproduced except in full, without the written approval of UL Verification Services Inc.

LTE Band 12

UL Verification Services, Inc.
Above 1GHz High Frequency Substitution Measurement

Company: LG
Project #: 15I20527
Date: 4/21/2015
Test Engineer: R.Z
Configuration: EUT , AC Adapter /HS
Location: Chamber G
Mode: LTE_16QAM Band 12 Harmonics, 10MHz Bandwidth

Band: LTE12 10MHz 16QAM

f MHz	SG reading (dBm)	Ant. Pol. (H/V)	Distance (m)	Preamp (dB)	Filter (dB)	EIRP (dBm)	Limit (dBm)	Delta (dB)	Notes
Low Ch,704									
1408.00	-22.7	V	3.0	37.4	1.0	-59.1	-13.0	-46.1	
2112.00	-15.8	V	3.0	36.6	1.0	-51.4	-13.0	-38.4	
2816.00	-20.3	V	3.0	36.4	1.0	-55.7	-13.0	-42.7	
1408.00	-22.5	H	3.0	37.4	1.0	-58.8	-13.0	-45.8	
2112.00	-15.5	H	3.0	36.6	1.0	-51.1	-13.0	-38.1	
2816.00	-21.9	H	3.0	36.4	1.0	-57.3	-13.0	-44.3	
Mid Ch,707.5									
1415.00	-19.4	V	3.0	37.3	1.0	-55.7	-13.0	-42.7	
2122.50	-22.5	V	3.0	36.6	1.0	-58.1	-13.0	-45.1	
2830.00	-20.4	V	3.0	36.4	1.0	-55.8	-13.0	-42.8	
1415.00	-20.1	H	3.0	37.3	1.0	-56.5	-13.0	-43.5	
2122.50	-22.7	H	3.0	36.6	1.0	-58.3	-13.0	-45.3	
2830.00	-18.4	H	3.0	36.4	1.0	-53.7	-13.0	-40.7	
High Ch,711									
1422.00	-23.1	V	3.0	37.3	1.0	-59.4	-13.0	-46.4	
2133.00	-17.5	V	3.0	36.6	1.0	-53.0	-13.0	-40.0	
2844.00	-20.9	V	3.0	36.4	1.0	-56.2	-13.0	-43.2	
1422.00	-23.6	H	3.0	37.3	1.0	-59.9	-13.0	-46.9	
2133.00	-18.0	H	3.0	36.6	1.0	-53.5	-13.0	-40.5	
2844.00	-19.7	H	3.0	36.4	1.0	-55.1	-13.0	-42.1	

This report shall not be reproduced except in full, without the written approval of UL Verification Services Inc.

UL Verification Services, Inc.
Above 1GHz High Frequency Substitution Measurement

Company: LG
Project #: 15I20527
Date: 4/21/2015
Test Engineer: R.Z
Configuration: EUT , AC Adapter /HS
Location: Chamber G
Mode: LTE_QPSK Band 12 Harmonics, 10MHz Bandwidth

Band: LTE12 10MHz QPSK

f MHz	SG reading (dBm)	Ant. Pol. (H/V)	Distance (m)	Preamp (dB)	Filter (dB)	EIRP (dBm)	Limit (dBm)	Delta (dB)	Notes
Low Ch,704									
1408.00	-23.2	V	3.0	37.4	1.0	-59.5	-13.0	-46.5	
2112.00	-16.3	V	3.0	36.6	1.0	-51.9	-13.0	-38.9	
2816.00	-20.1	V	3.0	36.4	1.0	-55.5	-13.0	-42.5	
1408.00	-21.5	H	3.0	37.4	1.0	-57.9	-13.0	-44.9	
2112.00	-21.8	H	3.0	36.6	1.0	-57.4	-13.0	-44.4	
2816.00	-22.6	H	3.0	36.4	1.0	-58.0	-13.0	-45.0	
Mid Ch,707.5									
1415.00	-20.9	V	3.0	37.3	1.0	-57.2	-13.0	-44.2	
2122.50	-23.5	V	3.0	36.6	1.0	-59.1	-13.0	-46.1	
2830.00	-21.6	V	3.0	36.4	1.0	-57.0	-13.0	-44.0	
1415.00	-21.4	H	3.0	37.3	1.0	-57.8	-13.0	-44.8	
2122.50	-22.0	H	3.0	36.6	1.0	-57.6	-13.0	-44.6	
2830.00	-21.1	H	3.0	36.4	1.0	-56.4	-13.0	-43.4	
High Ch,711									
1422.00	-23.4	V	3.0	37.3	1.0	-59.7	-13.0	-46.7	
2133.00	-15.4	V	3.0	36.6	1.0	-50.9	-13.0	-37.9	
2844.00	-19.5	V	3.0	36.4	1.0	-54.8	-13.0	-41.8	
1422.00	-22.8	H	3.0	37.3	1.0	-59.1	-13.0	-46.1	
2133.00	-17.8	H	3.0	36.6	1.0	-53.3	-13.0	-40.3	
2844.00	-21.5	H	3.0	36.4	1.0	-56.9	-13.0	-43.9	

This report shall not be reproduced except in full, without the written approval of UL Verification Services Inc.

UL Verification Services, Inc.
Above 1GHz High Frequency Substitution Measurement

Company: LG
Project #: 15I20527
Date: 4/21/2015
Test Engineer: R.Z
Configuration: EUT , AC Adapter /HS
Location: Chamber G
Mode: LTE_16QAM Band 12 Harmonics, 5MHz Bandwidth

Band
LTE12
5MHz
16QAM

f MHz	SG reading (dBm)	Ant. Pol. (H/V)	Distance (m)	Preamp (dB)	Filter (dB)	EIRP (dBm)	Limit (dBm)	Delta (dB)	Notes
Low Ch, 701.50									
1403.00	-25.1	V	3.0	37.4	1.0	-61.5	-13.0	-48.5	
2104.50	-15.4	V	3.0	36.6	1.0	-51.0	-13.0	-38.0	
2806.00	-20.9	V	3.0	36.4	1.0	-56.3	-13.0	-43.3	
1403.00	0.0	H	3.0	37.4	1.0	-36.4	-13.0	-23.4	
2104.50	-17.7	H	3.0	36.6	1.0	-53.3	-13.0	-40.3	
2806.00	-22.9	H	3.0	36.4	1.0	-58.3	-13.0	-45.3	
Mid Ch, 707.50									
1415.00	-23.7	V	3.0	37.3	1.0	-60.0	-13.0	-47.0	
2122.50	-18.6	V	3.0	36.6	1.0	-54.2	-13.0	-41.2	
2830.00	-20.3	V	3.0	36.4	1.0	-55.7	-13.0	-42.7	
1415.00	-22.4	H	3.0	37.3	1.0	-58.8	-13.0	-45.8	
2122.50	-21.3	H	3.0	36.6	1.0	-56.9	-13.0	-43.9	
2830.00	-22.9	H	3.0	36.4	1.0	-58.2	-13.0	-45.2	
High Ch, 713.50									
1427.00	-23.8	V	3.0	37.3	1.0	-60.1	-13.0	-47.1	
2140.50	-21.7	V	3.0	36.6	1.0	-57.2	-13.0	-44.2	
2854.00	-20.7	V	3.0	36.4	1.0	-56.0	-13.0	-43.0	
1427.00	-21.4	H	3.0	37.3	1.0	-57.7	-13.0	-44.7	
2140.50	-21.9	H	3.0	36.6	1.0	-57.4	-13.0	-44.4	
2854.00	-21.5	H	3.0	36.4	1.0	-56.9	-13.0	-43.9	

This report shall not be reproduced except in full, without the written approval of UL Verification Services Inc.

UL Verification Services, Inc.
Above 1GHz High Frequency Substitution Measurement

Company: LG
Project #: 15I20527
Date: 4/21/2015
Test Engineer: R.Z
Configuration: EUT , AC Adapter /HS
Location: Chamber G
Mode: LTE_QPSK Band 12 Harmonics, 5MHz Bandwidth

Band
LTE12
5MHz
QPSK

f MHz	SG reading (dBm)	Ant. Pol. (H/V)	Distance (m)	Preamp (dB)	Filter (dB)	EIRP (dBm)	Limit (dBm)	Delta (dB)	Notes
Low Ch, 701.50									
1403.00	-26.2	V	3.0	37.4	1.0	-62.6	-13.0	-49.6	
2104.50	-16.5	V	3.0	36.6	1.0	-52.1	-13.0	-39.1	
2806.00	-21.2	V	3.0	36.4	1.0	-56.6	-13.0	-43.6	
1403.00	-22.2	H	3.0	37.4	1.0	-58.6	-13.0	-45.6	
2104.50	-16.9	H	3.0	36.6	1.0	-52.5	-13.0	-39.5	
2806.00	-20.9	H	3.0	36.4	1.0	-56.3	-13.0	-43.3	
Mid Ch, 707.50									
1415.00	-23.4	V	3.0	37.3	1.0	-59.7	-13.0	-46.7	
2122.50	-20.8	V	3.0	36.6	1.0	-56.4	-13.0	-43.4	
2830.00	-21.8	V	3.0	36.4	1.0	-57.2	-13.0	-44.2	
1415.00	-22.5	H	3.0	37.3	1.0	-58.9	-13.0	-45.9	
2122.50	-18.2	H	3.0	36.6	1.0	-53.8	-13.0	-40.8	
2830.00	-21.0	H	3.0	36.4	1.0	-56.3	-13.0	-43.3	
High Ch, 713.50									
1427.00	-18.1	V	3.0	37.3	1.0	-54.4	-13.0	-41.4	
2140.50	-22.8	V	3.0	36.6	1.0	-58.3	-13.0	-45.3	
2854.00	-20.9	V	3.0	36.4	1.0	-56.2	-13.0	-43.2	
1427.00	-22.9	H	3.0	37.3	1.0	-59.2	-13.0	-46.2	
2140.50	-21.8	H	3.0	36.6	1.0	-57.4	-13.0	-44.4	
2854.00	-21.2	H	3.0	36.4	1.0	-56.6	-13.0	-43.6	

This report shall not be reproduced except in full, without the written approval of UL Verification Services Inc.

UL Verification Services, Inc.
Above 1GHz High Frequency Substitution Measurement

Company: LG
Project #: 15I20527
Date: 4/21/2015
Test Engineer: R.Z
Configuration: EUT , AC Adapter /HS
Location: Chamber G
Mode: LTE_16QAM Band 12 Harmonics, 3MHz Bandwidth

Band
LTE12
3MHz
16QAM

f MHz	SG reading (dBm)	Ant. Pol. (H/V)	Distance (m)	Preamp (dB)	Filter (dB)	EIRP (dBm)	Limit (dBm)	Delta (dB)	Notes
Low Ch, 700.5									
1401.00	-22.3	V	3.0	37.4	1.0	-58.7	-13.0	-45.7	
2101.50	-13.9	V	3.0	36.6	1.0	-49.4	-13.0	-36.4	
2802.00	-21.9	V	3.0	36.4	1.0	-57.3	-13.0	-44.3	
1401.00	-21.8	H	3.0	37.4	1.0	-58.1	-13.0	-45.1	
2101.50	-14.1	H	3.0	36.6	1.0	-49.7	-13.0	-36.7	
2802.00	-23.1	H	3.0	36.4	1.0	-58.5	-13.0	-45.5	
Mid Ch, 707.50									
1415.00	-26.7	V	3.0	37.3	1.0	-63.0	-13.0	-50.0	
2122.00	-15.4	V	3.0	36.6	1.0	-51.0	-13.0	-38.0	
2830.00	-19.8	V	3.0	36.4	1.0	-55.2	-13.0	-42.2	
1415.00	-29.8	H	3.0	37.3	1.0	-66.2	-13.0	-53.2	
2122.00	-18.5	H	3.0	36.6	1.0	-54.1	-13.0	-41.1	
2830.00	-20.4	H	3.0	36.4	1.0	-55.7	-13.0	-42.7	
High Ch, 714.5									
1429.00	-22.5	V	3.0	37.3	1.0	-58.8	-13.0	-45.8	
2143.50	-21.4	V	3.0	36.6	1.0	-56.9	-13.0	-43.9	
2858.00	-21.5	V	3.0	36.4	1.0	-56.8	-13.0	-43.8	
1429.00	-21.4	H	3.0	37.3	1.0	-57.8	-13.0	-44.8	
2143.50	-22.7	H	3.0	36.6	1.0	-58.2	-13.0	-45.2	
2858.00	-21.5	H	3.0	36.4	1.0	-56.9	-13.0	-43.9	

This report shall not be reproduced except in full, without the written approval of UL Verification Services Inc.

UL Verification Services, Inc.
Above 1GHz High Frequency Substitution Measurement

Company: LG
Project #: 15I20527
Date: 4/21/2015
Test Engineer: R.Z
Configuration: EUT , AC Adapter /HS
Location: Chamber G
Mode: LTE_QPSK Band 12 Harmonics, 3MHz Bandwidth

Band
LTE12
3MHz
QPSK

f MHz	SG reading (dBm)	Ant. Pol. (H/V)	Distance (m)	Preamp (dB)	Filter (dB)	EIRP (dBm)	Limit (dBm)	Delta (dB)	Notes
Low Ch, 700.5									
1401.00	-23.7	V	3.0	37.4	1.0	-60.1	-13.0	-47.1	
2101.50	-13.3	V	3.0	36.6	1.0	-48.9	-13.0	-35.9	
2802.00	-21.6	V	3.0	36.4	1.0	-57.0	-13.0	-44.0	
1401.00	-18.8	H	3.0	37.4	1.0	-55.1	-13.0	-42.1	
2101.50	-24.1	H	3.0	36.6	1.0	-59.7	-13.0	-46.7	
2802.00	-22.9	H	3.0	36.4	1.0	-58.3	-13.0	-45.3	
Mid Ch, 707.50									
1415.00	-26.9	V	3.0	37.3	1.0	-63.2	-13.0	-50.2	
2122.00	-17.8	V	3.0	36.6	1.0	-53.4	-13.0	-40.4	
2830.00	-21.1	V	3.0	36.4	1.0	-56.5	-13.0	-43.5	
1415.00	-22.5	H	3.0	37.3	1.0	-58.9	-13.0	-45.9	
2122.00	-17.8	H	3.0	36.6	1.0	-53.4	-13.0	-40.4	
2830.00	-19.7	H	3.0	36.4	1.0	-55.0	-13.0	-42.0	
High Ch, 714.5									
1429.00	-21.7	V	3.0	37.3	1.0	-58.0	-13.0	-45.0	
2143.50	-21.7	V	3.0	36.6	1.0	-57.2	-13.0	-44.2	
2858.00	-21.3	V	3.0	36.4	1.0	-56.6	-13.0	-43.6	
1429.00	-20.4	H	3.0	37.3	1.0	-56.7	-13.0	-43.7	
2143.50	-21.1	H	3.0	36.6	1.0	-56.7	-13.0	-43.7	
2858.00	-21.3	H	3.0	36.4	1.0	-56.7	-13.0	-43.7	

This report shall not be reproduced except in full, without the written approval of UL Verification Services Inc.

UL Verification Services, Inc.
Above 1GHz High Frequency Substitution Measurement

Company: LG
Project #: 15I20527
Date: 4/21/2015
Test Engineer: R.Z
Configuration: EUT , AC Adapter /HS
Location: Chamber G
Mode: LTE_16QAM Band 12 Harmonics, 1.4MHz Bandwidth

Band
LTE12
1.4MHz
16QAM

f MHz	SG reading (dBm)	Ant. Pol. (H/V)	Distance (m)	Preamp (dB)	Filter (dB)	EIRP (dBm)	Limit (dBm)	Delta (dB)	Notes
Low Ch, 699.7									
1399.40	-24.5	V	3.0	37.4	1.0	-60.9	-13.0	-47.9	
2099.10	-15.9	V	3.0	36.6	1.0	-51.5	-13.0	-38.5	
2798.80	-22.4	V	3.0	36.4	1.0	-57.8	-13.0	-44.8	
1399.40	-23.0	H	3.0	37.4	1.0	-59.3	-13.0	-46.3	
2099.10	-16.6	H	3.0	36.6	1.0	-52.2	-13.0	-39.2	
2798.80	-19.6	H	3.0	36.4	1.0	-55.0	-13.0	-42.0	
Mid Ch, 707.50									
1415.00	-22.7	V	3.0	37.3	1.0	-59.0	-13.0	-46.0	
2122.00	-18.3	V	3.0	36.6	1.0	-53.9	-13.0	-40.9	
2830.00	-21.1	V	3.0	36.4	1.0	-56.5	-13.0	-43.5	
1415.00	-22.7	H	3.0	37.3	1.0	-59.1	-13.0	-46.1	
2122.00	-15.8	H	3.0	36.6	1.0	-51.4	-13.0	-38.4	
2830.00	-19.3	H	3.0	36.4	1.0	-54.6	-13.0	-41.6	
High Ch, 715.3									
1430.60	-17.8	V	3.0	37.3	1.0	-54.1	-13.0	-41.1	
2145.90	-22.9	V	3.0	36.6	1.0	-58.4	-13.0	-45.4	
2861.20	-21.7	V	3.0	36.4	1.0	-57.0	-13.0	-44.0	
1430.60	-18.7	H	3.0	37.3	1.0	-55.0	-13.0	-42.0	
2145.90	-24.3	H	3.0	36.6	1.0	-59.8	-13.0	-46.8	
2861.20	-22.5	H	3.0	36.4	1.0	-57.9	-13.0	-44.9	

This report shall not be reproduced except in full, without the written approval of UL Verification Services Inc.

UL Verification Services, Inc.
Above 1GHz High Frequency Substitution Measurement

Company: LG
Project #: 15I20527
Date: 4/21/2015
Test Engineer: R.Z
Configuration: EUT , AC Adapter /HS
Location: Chamber G
Mode: LTE_QPSK Band 12 Harmonics, 1.4MHz Bandwidth

Band
LTE12
1.4MHz
QPSK

f MHz	SG reading (dBm)	Ant. Pol. (H/V)	Distance (m)	Preamp (dB)	Filter (dB)	EIRP (dBm)	Limit (dBm)	Delta (dB)	Notes
Low Ch, 699.7									
1399.40	-24.0	V	3.0	37.4	1.0	-60.4	-13.0	-47.4	
2099.10	-13.8	V	3.0	36.6	1.0	-49.4	-13.0	-36.4	
2798.80	-22.7	V	3.0	36.4	1.0	-58.1	-13.0	-45.1	
1399.40	-21.7	H	3.0	37.4	1.0	-58.0	-13.0	-45.0	
2099.10	-16.5	H	3.0	36.6	1.0	-52.1	-13.0	-39.1	
2798.80	-23.5	H	3.0	36.4	1.0	-58.9	-13.0	-45.9	
Mid Ch, 707.50									
1415.00	-24.4	V	3.0	37.3	1.0	-60.8	-13.0	-47.8	
2122.00	-15.4	V	3.0	36.6	1.0	-51.0	-13.0	-38.0	
2830.00	-21.2	V	3.0	36.4	1.0	-56.6	-13.0	-43.6	
1415.00	-23.6	H	3.0	37.3	1.0	-59.9	-13.0	-46.9	
2122.00	-17.1	H	3.0	36.6	1.0	-52.7	-13.0	-39.7	
2830.00	-20.0	H	3.0	36.4	1.0	-55.4	-13.0	-42.4	
High Ch, 715.3									
1430.60	-18.8	V	3.0	37.3	1.0	-55.1	-13.0	-42.1	
2145.90	-23.2	V	3.0	36.6	1.0	-58.7	-13.0	-45.7	
2861.20	-21.6	V	3.0	36.4	1.0	-57.0	-13.0	-44.0	
1430.60	-21.9	H	3.0	37.3	1.0	-58.2	-13.0	-45.2	
2145.90	-22.7	H	3.0	36.6	1.0	-58.2	-13.0	-45.2	
2861.20	-20.8	H	3.0	36.4	1.0	-56.2	-13.0	-43.2	

This report shall not be reproduced except in full, without the written approval of UL Verification Services Inc.

LTE Band 25

UL Verification Services, Inc.
Above 1GHz High Frequency Substitution Measurement

Company: LG Electronics
Project #: 15I20527
Date: 4/20/2015
Test Engineer: R.Z
Configuration: EUT/ AC Charger/ Headset
Location: Chamber G
Mode: LTE_16QAM Band 25 Harmonics, 20MHz Bandwidth

Band
LTE25
20MHz
16QAM

f MHz	SG reading (dBm)	Ant. Pol. (H/V)	Distance (m)	Preamp (dB)	Filter (dB)	EIRP (dBm)	Limit (dBm)	Delta (dB)	Notes
Low Ch, 1860									
3720.00	-11.3	V	3.0	35.8	1.0	-46.1	-13.0	-33.1	
5580.00	-2.7	V	3.0	35.5	1.0	-37.2	-13.0	-24.2	
7440.00	4.7	V	3.0	35.7	1.0	-30.0	-13.0	-17.0	
3720.00	-11.2	H	3.0	35.8	1.0	-46.0	-13.0	-33.0	
5580.00	-6.1	H	3.0	35.5	1.0	-40.6	-13.0	-27.6	
7440.00	1.6	H	3.0	35.7	1.0	-33.2	-13.0	-20.2	
Mid Ch, 1882.5									
3765.00	-9.6	V	3.0	35.8	1.0	-44.4	-13.0	-31.4	
5647.50	-3.7	V	3.0	35.5	1.0	-38.2	-13.0	-25.2	
7530.00	1.9	V	3.0	35.7	1.0	-32.9	-13.0	-19.9	
3765.00	-9.3	H	3.0	35.8	1.0	-44.1	-13.0	-31.1	
5647.50	-5.6	H	3.0	35.5	1.0	-40.1	-13.0	-27.1	
7530.00	0.7	H	3.0	35.7	1.0	-34.1	-13.0	-21.1	
High Ch, 1905									
3810.00	-7.9	V	3.0	35.8	1.0	-42.6	-13.0	-29.6	
5715.00	-2.8	V	3.0	35.5	1.0	-37.3	-13.0	-24.3	
7620.00	2.6	V	3.0	35.8	1.0	-32.2	-13.0	-19.2	
3810.00	-7.3	H	3.0	35.8	1.0	-42.1	-13.0	-29.1	
5715.00	-4.5	H	3.0	35.5	1.0	-39.0	-13.0	-26.0	
7620.00	0.9	H	3.0	35.8	1.0	-33.9	-13.0	-20.9	

This report shall not be reproduced except in full, without the written approval of UL Verification Services Inc.

UL Verification Services, Inc.
Above 1GHz High Frequency Substitution Measurement

Company: LG Electronics
Project #: 15I20527
Date: 4/20/2015
Test Engineer: R.Z
Configuration: EUT/ AC Charger/ Headset
Location: Chamber G
Mode: LTE_QPSK Band 25 Harmonics, 20MHz Bandwidth

Band LTE25 20MHz QPSK

f MHz	SG reading (dBm)	Ant. Pol. (H/V)	Distance (m)	Preamp (dB)	Filter (dB)	EIRP (dBm)	Limit (dBm)	Delta (dB)	Notes
Low Ch, 1860									
3720.00	-9.6	V	3.0	35.8	1.0	-44.5	-13.0	-31.5	
5580.00	-1.9	V	3.0	35.5	1.0	-36.4	-13.0	-23.4	
7440.00	4.7	V	3.0	35.7	1.0	-30.1	-13.0	-17.1	
3720.00	-11.0	H	3.0	35.8	1.0	-45.8	-13.0	-32.8	
5580.00	-4.5	H	3.0	35.5	1.0	-39.0	-13.0	-26.0	
7440.00	3.5	H	3.0	35.7	1.0	-31.2	-13.0	-18.2	
Mid Ch, 1882.5									
3765.00	-8.6	V	3.0	35.8	1.0	-43.4	-13.0	-30.4	
5647.50	-1.0	V	3.0	35.5	1.0	-35.5	-13.0	-22.5	
7530.00	4.8	V	3.0	35.7	1.0	-29.9	-13.0	-16.9	
3765.00	-11.4	H	3.0	35.8	1.0	-46.2	-13.0	-33.2	
5647.50	-5.7	H	3.0	35.5	1.0	-40.2	-13.0	-27.2	
7530.00	-0.3	H	3.0	35.7	1.0	-35.1	-13.0	-22.1	
High Ch, 1905									
3810.00	-7.0	V	3.0	35.8	1.0	-41.8	-13.0	-28.8	
5715.00	-2.9	V	3.0	35.5	1.0	-37.4	-13.0	-24.4	
7620.00	2.4	V	3.0	35.8	1.0	-32.3	-13.0	-19.3	
3810.00	-7.6	H	3.0	35.8	1.0	-42.4	-13.0	-29.4	
5715.00	-4.4	H	3.0	35.5	1.0	-38.9	-13.0	-25.9	
7620.00	1.2	H	3.0	35.8	1.0	-33.5	-13.0	-20.5	

This report shall not be reproduced except in full, without the written approval of UL Verification Services Inc.

UL Verification Services, Inc.
Above 1GHz High Frequency Substitution Measurement

Company: LG Electronics
Project #: 15I20527
Date: 4/20/2015
Test Engineer: R.Z
Configuration: EUT/ AC Charger/ Headset
Location: Chamber G
Mode: LTE_16QAM Band 25 Harmonics, 15MHz Bandwidth

Band
LTE25
15MHz
16QAM

f MHz	SG reading (dBm)	Ant. Pol. (H/V)	Distance (m)	Preamp (dB)	Filter (dB)	EIRP (dBm)	Limit (dBm)	Delta (dB)	Notes
Low Ch, 1857.5									
3715.00	-10.6	V	3.0	35.8	1.0	-45.5	-13.0	-32.5	
5572.50	-3.8	V	3.0	35.5	1.0	-38.3	-13.0	-25.3	
7430.00	5.3	V	3.0	35.7	1.0	-29.5	-13.0	-16.5	
3715.00	-10.6	H	3.0	35.8	1.0	-45.4	-13.0	-32.4	
5572.50	-6.7	H	3.0	35.5	1.0	-41.2	-13.0	-28.2	
7430.00	2.5	H	3.0	35.7	1.0	-32.3	-13.0	-19.3	
Mid Ch, 1882.5									
3815.00	-10.1	V	3.0	35.8	1.0	-44.9	-13.0	-31.9	
5722.50	-4.9	V	3.0	35.5	1.0	-39.4	-13.0	-26.4	
7630.00	4.5	V	3.0	35.7	1.0	-30.3	-13.0	-17.3	
3815.00	-10.1	H	3.0	35.8	1.0	-44.9	-13.0	-31.9	
5722.50	-7.9	H	3.0	35.5	1.0	-42.4	-13.0	-29.4	
7630.00	1.3	H	3.0	35.7	1.0	-33.5	-13.0	-20.5	
High Ch, 1907.5									
3815.00	-6.8	V	3.0	35.8	1.0	-41.6	-13.0	-28.6	
5722.50	-4.0	V	3.0	35.5	1.0	-38.5	-13.0	-25.5	
7630.00	4.7	V	3.0	35.8	1.0	-30.1	-13.0	-17.1	
3815.00	-8.2	H	3.0	35.8	1.0	-43.0	-13.0	-30.0	
5722.50	-6.3	H	3.0	35.5	1.0	-40.8	-13.0	-27.8	
7630.00	1.4	H	3.0	35.8	1.0	-33.4	-13.0	-20.4	

This report shall not be reproduced except in full, without the written approval of UL Verification Services Inc.

UL Verification Services, Inc.
Above 1GHz High Frequency Substitution Measurement

Company: LG Electronics
Project #: 15I20527
Date: 4/20/2015
Test Engineer: R.Z
Configuration: EUT/ AC Charger/ Headset
Location: Chamber G
Mode: LTE_QPSK Band 25 Harmonics, 15MHz Bandwidth

Band LTE25 15MHz QPSK

f MHz	SG reading (dBm)	Ant. Pol. (H/V)	Distance (m)	Preamp (dB)	Filter (dB)	EIRP (dBm)	Limit (dBm)	Delta (dB)	Notes
Low Ch, 1857.5									
3715.00	-11.0	V	3.0	35.8	1.0	-45.9	-13.0	-32.9	
5572.50	-5.3	V	3.0	35.5	1.0	-39.7	-13.0	-26.7	
7430.00	4.8	V	3.0	35.7	1.0	-29.9	-13.0	-16.9	
3715.00	-8.7	H	3.0	35.8	1.0	-43.5	-13.0	-30.5	
5572.50	-7.8	H	3.0	35.5	1.0	-42.3	-13.0	-29.3	
7430.00	2.9	H	3.0	35.7	1.0	-31.8	-13.0	-18.8	
Mid Ch, 1882.5									
3765.00	-10.1	V	3.0	35.8	1.0	-44.9	-13.0	-31.9	
5647.50	-4.9	V	3.0	35.5	1.0	-39.4	-13.0	-26.4	
7530.00	4.5	V	3.0	35.7	1.0	-30.3	-13.0	-17.3	
3765.00	-10.9	H	3.0	35.8	1.0	-45.7	-13.0	-32.7	
5647.50	-7.7	H	3.0	35.5	1.0	-42.2	-13.0	-29.2	
7530.00	0.3	H	3.0	35.7	1.0	-34.5	-13.0	-21.5	
High Ch, 1907.5									
3815.00	-6.3	V	3.0	35.8	1.0	-41.1	-13.0	-28.1	
5722.50	-5.4	V	3.0	35.5	1.0	-39.9	-13.0	-26.9	
7630.00	4.3	V	3.0	35.8	1.0	-30.5	-13.0	-17.5	
3815.00	-7.1	H	3.0	35.8	1.0	-41.9	-13.0	-28.9	
5722.50	-6.2	H	3.0	35.5	1.0	-40.7	-13.0	-27.7	
7630.00	2.1	H	3.0	35.8	1.0	-32.6	-13.0	-19.6	

This report shall not be reproduced except in full, without the written approval of UL Verification Services Inc.

UL Verification Services, Inc.
Above 1GHz High Frequency Substitution Measurement

Company: LG Electronics
Project #: 15I20527
Date: 4/20/2015
Test Engineer: R.Z
Configuration: EUT/ AC Charger/ Headset
Location: Chamber G
Mode: LTE_16QAM Band 25 Harmonics, 10MHz Bandwidth

Band
LTE25
10MHz
16QAM

f MHz	SG reading (dBm)	Ant. Pol. (H/V)	Distance (m)	Preamp (dB)	Filter (dB)	EIRP (dBm)	Limit (dBm)	Delta (dB)	Notes
Low Ch, 1855									
3710.00	-11.2	V	3.0	35.9	1.0	-46.1	-13.0	-33.1	
5565.00	-4.0	V	3.0	35.5	1.0	-38.5	-13.0	-25.5	
7420.00	5.0	V	3.0	35.7	1.0	-29.7	-13.0	-16.7	
3710.00	-12.4	H	3.0	35.9	1.0	-47.3	-13.0	-34.3	
5565.00	-6.3	H	3.0	35.5	1.0	-40.7	-13.0	-27.7	
7420.00	3.5	H	3.0	35.7	1.0	-31.2	-13.0	-18.2	
Mid Ch, 1882.5									
3765.00	-9.7	V	3.0	35.8	1.0	-44.5	-13.0	-31.5	
5647.50	-3.5	V	3.0	35.5	1.0	-38.0	-13.0	-25.0	
7530.00	5.4	V	3.0	35.7	1.0	-29.4	-13.0	-16.4	
3765.00	-11.3	H	3.0	35.8	1.0	-46.1	-13.0	-33.1	
5647.50	-6.6	H	3.0	35.5	1.0	-41.1	-13.0	-28.1	
7530.00	0.4	H	3.0	35.7	1.0	-34.3	-13.0	-21.3	
High Ch, 1910									
3820.00	-6.2	V	3.0	35.8	1.0	-41.0	-13.0	-28.0	
5730.00	-5.5	V	3.0	35.5	1.0	-40.0	-13.0	-27.0	
7640.00	4.1	V	3.0	35.8	1.0	-30.6	-13.0	-17.6	
3820.00	-6.4	H	3.0	35.8	1.0	-41.2	-13.0	-28.2	
5730.00	-6.5	H	3.0	35.5	1.0	-41.0	-13.0	-28.0	
7640.00	1.1	H	3.0	35.8	1.0	-33.6	-13.0	-20.6	

This report shall not be reproduced except in full, without the written approval of UL Verification Services Inc.

UL Verification Services, Inc.
Above 1GHz High Frequency Substitution Measurement

Company: LG Electronics
Project #: 15I20527
Date: 4/20/2015
Test Engineer: R.Z
Configuration: EUT/ AC Charger/ Headset
Location: Chamber G
Mode: LTE_QPSK Band 25 Harmonics, 10MHz Bandwidth

Band LTE25 10MHz QPSK

f MHz	SG reading (dBm)	Ant. Pol. (H/V)	Distance (m)	Preamp (dB)	Filter (dB)	EIRP (dBm)	Limit (dBm)	Delta (dB)	Notes
Low Ch, 1855									
3710.00	-11.0	V	3.0	35.9	1.0	-45.9	-13.0	-32.9	
5565.00	-4.1	V	3.0	35.5	1.0	-38.6	-13.0	-25.6	
7420.00	6.2	V	3.0	35.7	1.0	-28.5	-13.0	-15.5	
3710.00	-9.3	H	3.0	35.9	1.0	-44.2	-13.0	-31.2	
5565.00	-4.4	H	3.0	35.5	1.0	-38.8	-13.0	-25.8	
7420.00	2.4	H	3.0	35.7	1.0	-32.4	-13.0	-19.4	
Mid Ch, 1882.5									
3765.00	-8.0	V	3.0	35.8	1.0	-42.8	-13.0	-29.8	
5647.50	-5.2	V	3.0	35.5	1.0	-39.7	-13.0	-26.7	
7530.00	3.6	V	3.0	35.7	1.0	-31.1	-13.0	-18.1	
3765.00	-11.2	H	3.0	35.8	1.0	-46.0	-13.0	-33.0	
5647.50	-6.8	H	3.0	35.5	1.0	-41.3	-13.0	-28.3	
7530.00	1.4	H	3.0	35.7	1.0	-33.4	-13.0	-20.4	
High Ch, 1910									
3820.00	-7.4	V	3.0	35.8	1.0	-42.2	-13.0	-29.2	
5730.00	-4.6	V	3.0	35.5	1.0	-39.1	-13.0	-26.1	
7640.00	3.7	V	3.0	35.8	1.0	-31.0	-13.0	-18.0	
3820.00	-8.3	H	3.0	35.8	1.0	-43.1	-13.0	-30.1	
5730.00	-6.7	H	3.0	35.5	1.0	-41.2	-13.0	-28.2	
7640.00	1.1	H	3.0	35.8	1.0	-33.7	-13.0	-20.7	

This report shall not be reproduced except in full, without the written approval of UL Verification Services Inc.

UL Verification Services, Inc.
Above 1GHz High Frequency Substitution Measurement

Company: LG Electronics
Project #: 15I20527
Date: 5/1/2015
Test Engineer: Jude Semana
Configuration: EUT/ AC Charger/ Headset
Location: Chamber A
Mode: LTE_16QAM Band 25 Harmonics, 5MHz Bandwidth

Band	f MHz	SG reading (dBm)	Ant. Pol. (H/V)	Distance (m)	Preamp (dB)	Filter (dB)	EIRP (dBm)	Limit (dBm)	Delta (dB)	Notes
LTE25	Low Ch, 1852.5									
	3705.00	-15.5	V	3.0	35.9	1.0	-50.4	-13.0	-37.4	
5MHz	5557.50	-7.4	V	3.0	35.5	1.0	-41.8	-13.0	-28.8	
	7410.00	-0.6	V	3.0	35.7	1.0	-35.3	-13.0	-22.3	
16QAM	3705.00	-13.8	H	3.0	35.9	1.0	-48.6	-13.0	-35.6	
	5557.50	-14.6	H	3.0	35.5	1.0	-49.1	-13.0	-36.1	
	7410.00	-9.5	H	3.0	35.7	1.0	-44.2	-13.0	-31.2	
	Mid Ch, 1882.5									
	3765.00	-11.7	V	3.0	35.8	1.0	-46.5	-13.0	-33.5	
	5647.50	-8.2	V	3.0	35.5	1.0	-42.7	-13.0	-29.7	
	7530.00	-12.3	V	3.0	35.7	1.0	-47.0	-13.0	-34.0	
	3765.00	-12.2	H	3.0	35.8	1.0	-47.0	-13.0	-34.0	
	5647.50	-9.7	H	3.0	35.5	1.0	-44.1	-13.0	-31.1	
	7530.00	-3.0	H	3.0	35.7	1.0	-37.8	-13.0	-24.8	
	High Ch, 1912.5									
	3825.00	-14.5	V	3.0	35.8	1.0	-49.3	-13.0	-36.3	
	5737.50	-5.7	V	3.0	35.5	1.0	-40.2	-13.0	-27.2	
	7650.00	-10.8	V	3.0	35.8	1.0	-45.6	-13.0	-32.6	
	3825.00	-13.3	H	3.0	35.8	1.0	-48.1	-13.0	-35.1	
	5737.50	-6.9	H	3.0	35.5	1.0	-41.4	-13.0	-28.4	
	7650.00	-4.1	H	3.0	35.8	1.0	-38.8	-13.0	-25.8	

This report shall not be reproduced except in full, without the written approval of UL Verification Services Inc.

UL Verification Services, Inc.
Above 1GHz High Frequency Substitution Measurement

Company: LG Electronics
Project #: 15I20527
Date: 5/1/2015
Test Engineer: Jude Semana
Configuration: EUT/ AC Charger/ Headset
Location: Chamber A
Mode: LTE_QPSK Band 25 Harmonics, 5MHz Bandwidth

Band	f MHz	SG reading (dBm)	Ant. Pol. (H/V)	Distance (m)	Preamp (dB)	Filter (dB)	EIRP (dBm)	Limit (dBm)	Delta (dB)	Notes
	Low Ch, 1852.5									
LTE25	3705.00	-14.0	V	3.0	35.9	1.0	-48.9	-13.0	-35.9	
	5557.50	-7.0	V	3.0	35.5	1.0	-41.5	-13.0	-28.5	
5MHz	7410.00	2.2	V	3.0	35.7	1.0	-32.6	-13.0	-19.6	
	3705.00	-11.4	H	3.0	35.9	1.0	-46.3	-13.0	-33.3	
QPSK	5557.50	-14.2	H	3.0	35.5	1.0	-48.7	-13.0	-35.7	
	7410.00	-5.0	H	3.0	35.7	1.0	-39.7	-13.0	-26.7	
	Mid Ch, 1882.5									
	3765.00	-11.9	V	3.0	35.8	1.0	-46.7	-13.0	-33.7	
	5647.50	-8.5	V	3.0	35.5	1.0	-43.0	-13.0	-30.0	
	7530.00	-8.6	V	3.0	35.7	1.0	-43.4	-13.0	-30.4	
	3765.00	-12.3	H	3.0	35.8	1.0	-47.2	-13.0	-34.2	
	5647.50	-10.4	H	3.0	35.5	1.0	-44.9	-13.0	-31.9	
	7530.00	-4.1	H	3.0	35.7	1.0	-38.8	-13.0	-25.8	
	High Ch, 1912.5									
	3825.00	-14.7	V	3.0	35.8	1.0	-49.5	-13.0	-36.5	
	5737.50	-6.6	V	3.0	35.5	1.0	-41.1	-13.0	-28.1	
	7650.00	-11.5	V	3.0	35.8	1.0	-46.2	-13.0	-33.2	
	3825.00	-13.1	H	3.0	35.8	1.0	-47.9	-13.0	-34.9	
	5737.50	-6.7	H	3.0	35.5	1.0	-41.2	-13.0	-28.2	
	7650.00	-4.3	H	3.0	35.8	1.0	-39.1	-13.0	-26.1	

This report shall not be reproduced except in full, without the written approval of UL Verification Services Inc.

UL Verification Services, Inc.
Above 1GHz High Frequency Substitution Measurement

Company: LG Electronics
Project #: 15I20527
Date: 5/1/2015
Test Engineer: Jude Semana
Configuration: EUT/ AC Charger/ Headset
Location: Chamber B
Mode: LTE_16QAM Band 25 Harmonics, 3MHz Bandwidth

Band
LTE25
3MHz
16QAM

f MHz	SG reading (dBm)	Ant. Pol. (H/V)	Distance (m)	Preamp (dB)	Filter (dB)	EIRP (dBm)	Limit (dBm)	Delta (dB)	Notes
Low Ch, 1851.5									
3703.00	-10.1	V	3.0	35.9	1.0	-44.9	-13.0	-31.9	
5554.50	-11.1	V	3.0	35.5	1.0	-45.6	-13.0	-32.6	
7406.00	-1.1	V	3.0	35.7	1.0	-35.9	-13.0	-22.9	
3703.00	-11.9	H	3.0	35.9	1.0	-46.8	-13.0	-33.8	
5554.50	-14.5	H	3.0	35.5	1.0	-49.0	-13.0	-36.0	
7406.00	-3.0	H	3.0	35.7	1.0	-37.7	-13.0	-24.7	
Mid Ch, 1882.5									
3765.00	-12.3	V	3.0	35.8	1.0	-47.1	-13.0	-34.1	
5647.50	-4.4	V	3.0	35.5	1.0	-38.9	-13.0	-25.9	
7530.00	1.3	V	3.0	35.7	1.0	-33.4	-13.0	-20.4	
3765.00	-9.6	H	3.0	35.8	1.0	-44.4	-13.0	-31.4	
5647.50	-11.4	H	3.0	35.5	1.0	-45.9	-13.0	-32.9	
7530.00	-5.1	H	3.0	35.7	1.0	-39.8	-13.0	-26.8	
High Ch, 1913.5									
3827.00	102.5	V	3.0	35.8	1.0	67.8	-13.0	80.8	
5740.50	-9.9	V	3.0	35.5	1.0	-44.4	-13.0	-31.4	
7654.00	-1.6	V	3.0	35.8	1.0	-36.4	-13.0	-23.4	
3827.00	-7.9	H	3.0	35.8	1.0	-42.7	-13.0	-29.7	
5740.50	-12.6	H	3.0	35.5	1.0	-47.1	-13.0	-34.1	
7654.00	-8.8	H	3.0	35.8	1.0	-43.6	-13.0	-30.6	

This report shall not be reproduced except in full, without the written approval of UL Verification Services Inc.

UL Verification Services, Inc.
Above 1GHz High Frequency Substitution Measurement

Company: LG Electronics
Project #: 15I20527
Date: 5/1/2015
Test Engineer: Jude Semana
Configuration: EUT/ AC Charger/ Headset
Location: Chamber B
Mode: LTE_QPSK Band 25 Harmonics, 3MHz Bandwidth

Band	f MHz	SG reading (dBm)	Ant. Pol. (H/V)	Distance (m)	Preamp (dB)	Filter (dB)	EIRP (dBm)	Limit (dBm)	Delta (dB)	Notes
	Low Ch, 1851.5									
LTE25	3703.00	-9.5	V	3.0	35.9	1.0	-44.4	-13.0	-31.4	
	5554.50	-10.9	V	3.0	35.5	1.0	-45.4	-13.0	-32.4	
3MHz	7406.00	-1.6	V	3.0	35.7	1.0	-36.3	-13.0	-23.3	
	3703.00	-12.3	H	3.0	35.9	1.0	-47.2	-13.0	-34.2	
QPSK	5554.50	-14.5	H	3.0	35.5	1.0	-49.0	-13.0	-36.0	
	7406.00	-2.8	H	3.0	35.7	1.0	-37.5	-13.0	-24.5	
	Mid Ch, 1882.5									
	3765.00	-12.6	V	3.0	35.8	1.0	-47.4	-13.0	-34.4	
	5647.50	-4.4	V	3.0	35.5	1.0	-38.8	-13.0	-25.8	
	7530.00	1.0	V	3.0	35.7	1.0	-33.7	-13.0	-20.7	
	3765.00	-9.5	H	3.0	35.8	1.0	-44.3	-13.0	-31.3	
	5647.50	-11.1	H	3.0	35.5	1.0	-45.6	-13.0	-32.6	
	7530.00	-5.0	H	3.0	35.7	1.0	-39.8	-13.0	-26.8	
	High Ch, 1913.5									
	3827.00	-12.3	V	3.0	35.8	1.0	-47.1	-13.0	-34.1	
	5740.50	-9.3	V	3.0	35.5	1.0	-43.8	-13.0	-30.8	
	7654.00	-2.0	V	3.0	35.8	1.0	-36.7	-13.0	-23.7	
	3827.00	-8.4	H	3.0	35.8	1.0	-43.1	-13.0	-30.1	
	5740.50	-12.4	H	3.0	35.5	1.0	-46.9	-13.0	-33.9	
	7654.00	-8.9	H	3.0	35.8	1.0	-43.6	-13.0	-30.6	

This report shall not be reproduced except in full, without the written approval of UL Verification Services Inc.

UL Verification Services, Inc.
Above 1GHz High Frequency Substitution Measurement

Company: LG Electronics
Project #: 15I20527
Date: 4/17/2015
Test Engineer: R.Z
Configuration: EUT/ AC Charger/ Headset
Location: Chamber G
Mode: LTE_16QAM Band 25 Harmonics, 1.4MHz Bandwidth

Band
LTE25
1.4MHz
16QAM

f MHz	SG reading (dBm)	Ant. Pol. (H/V)	Distance (m)	Preamp (dB)	Filter (dB)	EIRP (dBm)	Limit (dBm)	Delta (dB)	Notes
Low Ch, 1850.7									
3701.40	-11.0	V	3.0	35.9	1.0	-45.8	-13.0	-32.8	
5552.10	-4.8	V	3.0	35.5	1.0	-39.3	-13.0	-26.3	
7402.80	5.5	V	3.0	35.7	1.0	-29.2	-13.0	-16.2	
3701.40	-12.5	H	3.0	35.9	1.0	-47.4	-13.0	-34.4	
5552.10	-8.8	H	3.0	35.5	1.0	-43.3	-13.0	-30.3	
7402.80	5.1	H	3.0	35.7	1.0	-29.6	-13.0	-16.6	
Mid Ch, 1882.5									
3765.00	-14.3	V	3.0	35.8	1.0	-44.7	-13.0	-31.7	
5647.50	-14.1	V	3.0	35.5	1.0	-48.6	-13.0	-35.6	
7530.00	-5.7	V	3.0	35.7	1.0	-40.5	-13.0	-27.5	
3765.00	-17.7	H	3.0	35.8	1.0	-52.5	-13.0	-39.5	
5647.50	-14.8	H	3.0	35.5	1.0	-49.3	-13.0	-36.3	
7530.00	-11.0	H	3.0	35.7	1.0	-45.8	-13.0	-32.8	
High Ch, 1914.3									
3828.60	-6.4	V	3.0	35.8	1.0	-41.2	-13.0	-28.2	
5742.90	-7.9	V	3.0	35.5	1.0	-42.4	-13.0	-29.4	
7657.20	5.6	V	3.0	35.8	1.0	-29.2	-13.0	-16.2	
3828.60	-6.3	H	3.0	35.8	1.0	-41.1	-13.0	-28.1	
5742.90	-8.7	H	3.0	35.5	1.0	-43.2	-13.0	-30.2	
7657.20	3.7	H	3.0	35.8	1.0	-31.1	-13.0	-18.1	

This report shall not be reproduced except in full, without the written approval of UL Verification Services Inc.

UL Verification Services, Inc.
Above 1GHz High Frequency Substitution Measurement

Company: LG Electronics
Project #: 15I20527
Date: 4/17/2015
Test Engineer: R.Z
Configuration: EUT/ AC Charger/ Headset
Location: Chamber G
Mode: LTE_QPSK Band 25 Harmonics, 1.4MHz Bandwidth

Band
LTE25
1.4MHz
QPSK

f MHz	SG reading (dBm)	Ant. Pol. (H/V)	Distance (m)	Preamp (dB)	Filter (dB)	EIRP (dBm)	Limit (dBm)	Delta (dB)	Notes
Low Ch, 1850.7									
3701.40	-9.7	V	3.0	35.9	1.0	-44.5	-13.0	-31.5	
5552.10	-6.1	V	3.0	35.5	1.0	-40.6	-13.0	-27.6	
7402.80	4.6	V	3.0	35.7	1.0	-30.1	-13.0	-17.1	
3701.40	-10.2	H	3.0	35.9	1.0	-45.0	-13.0	-32.0	
5552.10	-7.7	H	3.0	35.5	1.0	-42.2	-13.0	-29.2	
7402.80	4.2	H	3.0	35.7	1.0	-30.5	-13.0	-17.5	
Mid Ch, 1882.5									
3765.00	-16.9	V	3.0	35.8	1.0	-51.7	-13.0	-38.7	
5647.50	-16.0	V	3.0	35.5	1.0	-50.5	-13.0	-37.5	
7530.00	-8.9	V	3.0	35.7	1.0	-43.6	-13.0	-30.6	
3765.00	-17.3	H	3.0	35.8	1.0	-52.1	-13.0	-39.1	
5647.50	-15.0	H	3.0	35.5	1.0	-49.5	-13.0	-36.5	
7530.00	-9.2	H	3.0	35.7	1.0	-43.9	-13.0	-30.9	
High Ch, 1914.3									
3828.60	-6.2	V	3.0	35.8	1.0	-41.0	-13.0	-28.0	
5742.90	-7.1	V	3.0	35.5	1.0	-41.6	-13.0	-28.6	
7657.20	4.6	V	3.0	35.8	1.0	-30.2	-13.0	-17.2	
3828.60	-8.5	H	3.0	35.8	1.0	-43.3	-13.0	-30.3	
5742.90	-7.8	H	3.0	35.5	1.0	-42.3	-13.0	-29.3	
7657.20	-0.8	H	3.0	35.8	1.0	-35.6	-13.0	-22.6	

This report shall not be reproduced except in full, without the written approval of UL Verification Services Inc.

LTE Band 26

UL Verification Services, Inc.
Above 1GHz High Frequency Substitution Measurement

Company: LG Electronics
Project #: 15I20527
Date: 4/21/2015
Test Engineer: R.Z
Configuration: EUT/ AC Charger/ Headset
Location: Chamber G
Mode: LTE_16QAM Band 26 Harmonics, 15MHz Bandwidth

Band

LTE26

15MHz

16QAM

f MHz	SG reading (dBm)	Ant. Pol. (H/V)	Distance (m)	Preamp (dB)	Filter (dB)	EIRP (dBm)	Limit (dBm)	Delta (dB)	Notes
Low Ch, 831.5									
1643.00	-13.6	V	3.0	37.0	1.0	-49.7	-13.0	-36.7	
2464.50	-23.7	V	3.0	36.4	1.0	-59.2	-13.0	-46.2	
3286.00	-21.0	V	3.0	36.2	1.0	-56.2	-13.0	-43.2	
1643.00	-22.2	H	3.0	37.0	1.0	-58.2	-13.0	-45.2	
2464.50	-26.0	H	3.0	36.4	1.0	-61.4	-13.0	-48.4	
3286.00	-23.0	H	3.0	36.2	1.0	-58.2	-13.0	-45.2	
Mid Ch, 836.5									
1663.00	-17.5	V	3.0	37.0	1.0	-53.5	-13.0	-40.5	
2494.50	-23.9	V	3.0	36.4	1.0	-59.3	-13.0	-46.3	
3326.00	-20.7	V	3.0	36.1	1.0	-55.8	-13.0	-42.8	
1663.00	-18.4	H	3.0	37.0	1.0	-54.4	-13.0	-41.4	
2494.50	-25.2	H	3.0	36.4	1.0	-60.6	-13.0	-47.6	
3326.00	-21.9	H	3.0	36.1	1.0	-57.0	-13.0	-44.0	
High Ch, 841.5									
1683.00	-18.9	V	3.0	37.0	1.0	-54.9	-13.0	-41.9	
2524.50	-23.7	V	3.0	36.4	1.0	-59.1	-13.0	-46.1	
3366.00	-21.9	V	3.0	36.1	1.0	-57.1	-13.0	-44.1	
1683.00	-18.0	H	3.0	37.0	1.0	-54.0	-13.0	-41.0	
2524.50	-24.2	H	3.0	36.4	1.0	-59.6	-13.0	-46.6	
3366.00	-22.1	H	3.0	36.1	1.0	-57.2	-13.0	-44.2	

This report shall not be reproduced except in full, without the written approval of UL Verification Services Inc.

UL Verification Services, Inc.
Above 1GHz High Frequency Substitution Measurement

Company: LG Electronics
Project #: 15I20527
Date: 4/21/2015
Test Engineer: R.Z
Configuration: EUT/ AC Charger/ Headset
Location: Chamber G
Mode: LTE_QPSK Band 26 Harmonics, 15MHz Bandwidth

Band
LTE26
15MHz
QPSK

f MHz	SG reading (dBm)	Ant. Pol. (H/V)	Distance (m)	Preamp (dB)	Filter (dB)	EIRP (dBm)	Limit (dBm)	Delta (dB)	Notes
Low Ch, 831.5									
1643.00	-20.0	V	3.0	37.0	1.0	-56.1	-13.0	-43.1	
2464.50	-24.3	V	3.0	36.4	1.0	-59.8	-13.0	-46.8	
3286.00	-21.9	V	3.0	36.2	1.0	-57.1	-13.0	-44.1	
1643.00	-15.7	H	3.0	37.0	1.0	-51.8	-13.0	-38.8	
2464.50	-23.1	H	3.0	36.4	1.0	-58.5	-13.0	-45.5	
3286.00	-21.6	H	3.0	36.2	1.0	-56.8	-13.0	-43.8	
Mid Ch, 836.5									
1663.00	-18.0	V	3.0	37.0	1.0	-54.0	-13.0	-41.0	
2494.50	-23.1	V	3.0	36.4	1.0	-58.5	-13.0	-45.5	
3326.00	-21.0	V	3.0	36.1	1.0	-56.1	-13.0	-43.1	
1663.00	-17.1	H	3.0	37.0	1.0	-53.1	-13.0	-40.1	
2494.50	-24.8	H	3.0	36.4	1.0	-60.2	-13.0	-47.2	
3326.00	-21.6	H	3.0	36.1	1.0	-56.8	-13.0	-43.8	
High Ch, 841.5									
1683.00	-19.7	V	3.0	37.0	1.0	-55.7	-13.0	-42.7	
2524.50	-23.4	V	3.0	36.4	1.0	-58.8	-13.0	-45.8	
3366.00	-22.1	V	3.0	36.1	1.0	-57.3	-13.0	-44.3	
1683.00	-17.2	H	3.0	37.0	1.0	-53.2	-13.0	-40.2	
2524.50	-23.2	H	3.0	36.4	1.0	-58.6	-13.0	-45.6	
3366.00	-21.5	H	3.0	36.1	1.0	-56.6	-13.0	-43.6	

This report shall not be reproduced except in full, without the written approval of UL Verification Services Inc.

UL Verification Services, Inc.
Above 1GHz High Frequency Substitution Measurement

Company: LG Electronics
Project #: 15I20527
Date: 4/22/2015
Test Engineer: R.Z
Configuration: EUT/ AC Charger/ Headset
Location: Chamber G
Mode: LTE_16QAM Band 26 Harmonics, 10MHz Bandwidth

Band LTE26 10MHz 16QAM

f MHz	SG reading (dBm)	Ant. Pol. (H/V)	Distance (m)	Preamp (dB)	Filter (dB)	EIRP (dBm)	Limit (dBm)	Delta (dB)	Notes
Low Ch, 819									
1638.00	-17.8	V	3.0	37.0	1.0	-53.8	-13.0	-40.8	
2457.00	-23.1	V	3.0	36.4	1.0	-58.5	-13.0	-45.5	
3276.00	-20.9	V	3.0	36.2	1.0	-56.1	-13.0	-43.1	
1638.00	-19.9	H	3.0	37.0	1.0	-55.9	-13.0	-42.9	
2457.00	-25.0	H	3.0	36.4	1.0	-60.5	-13.0	-47.5	
3276.00	-22.1	H	3.0	36.2	1.0	-57.3	-13.0	-44.3	
Mid Ch, 831.5									
1663.00	-19.1	V	3.0	37.0	1.0	-55.1	-13.0	-42.1	
2494.50	-21.8	V	3.0	36.4	1.0	-57.2	-13.0	-44.2	
3326.00	-20.5	V	3.0	36.1	1.0	-55.6	-13.0	-42.6	
1663.00	-20.6	H	3.0	37.0	1.0	-56.6	-13.0	-43.6	
2494.50	-24.1	H	3.0	36.4	1.0	-59.5	-13.0	-46.5	
3326.00	-20.8	H	3.0	36.1	1.0	-55.9	-13.0	-42.9	
High Ch, 844									
1688.00	-24.5	V	3.0	37.0	1.0	-60.4	-13.0	-47.4	
2532.00	-23.8	V	3.0	36.4	1.0	-59.2	-13.0	-46.2	
3376.00	-20.8	V	3.0	36.1	1.0	-55.9	-13.0	-42.9	
1688.00	-23.8	H	3.0	37.0	1.0	-59.8	-13.0	-46.8	
2532.00	-26.0	H	3.0	36.4	1.0	-61.5	-13.0	-48.5	
3376.00	-21.9	H	3.0	36.1	1.0	-57.0	-13.0	-44.0	

This report shall not be reproduced except in full, without the written approval of UL Verification Services Inc.

UL Verification Services, Inc.
Above 1GHz High Frequency Substitution Measurement

Company: LG Electronics
Project #: 15I20527
Date: 4/22/2015
Test Engineer: R.Z
Configuration: EUT/ AC Charger/ Headset
Location: Chamber G
Mode: LTE_QPSK Band 26 Harmonics, 10MHz Bandwidth

Band LTE26 10MHz QPSK

f MHz	SG reading (dBm)	Ant. Pol. (H/V)	Distance (m)	Preamp (dB)	Filter (dB)	EIRP (dBm)	Limit (dBm)	Delta (dB)	Notes
Low Ch, 819									
1638.00	-16.9	V	3.0	37.0	1.0	-53.0	-13.0	-40.0	
2457.00	-23.8	V	3.0	36.4	1.0	-59.2	-13.0	-46.2	
3276.00	-21.9	V	3.0	36.2	1.0	-57.1	-13.0	-44.1	
1638.00	-20.5	H	3.0	37.0	1.0	-56.5	-13.0	-43.5	
2457.00	-24.5	H	3.0	36.4	1.0	-59.9	-13.0	-46.9	
3276.00	-21.6	H	3.0	36.2	1.0	-56.8	-13.0	-43.8	
Mid Ch, 831.5									
1663.00	-19.3	V	3.0	37.0	1.0	-55.3	-13.0	-42.3	
2494.50	-20.8	V	3.0	36.4	1.0	-56.2	-13.0	-43.2	
3326.00	-19.8	V	3.0	36.1	1.0	-55.0	-13.0	-42.0	
1663.00	-21.4	H	3.0	37.0	1.0	-57.4	-13.0	-44.4	
2494.50	-22.6	H	3.0	36.4	1.0	-58.0	-13.0	-45.0	
3326.00	-20.3	H	3.0	36.1	1.0	-55.4	-13.0	-42.4	
High Ch, 844									
1688.00	-22.8	V	3.0	37.0	1.0	-58.8	-13.0	-45.8	
2532.00	-23.2	V	3.0	36.4	1.0	-58.6	-13.0	-45.6	
3376.00	-20.9	V	3.0	36.1	1.0	-56.0	-13.0	-43.0	
1688.00	-23.2	H	3.0	37.0	1.0	-59.2	-13.0	-46.2	
2532.00	-23.5	H	3.0	36.4	1.0	-59.0	-13.0	-46.0	
3376.00	-20.5	H	3.0	36.1	1.0	-55.6	-13.0	-42.6	

This report shall not be reproduced except in full, without the written approval of UL Verification Services Inc.

UL Verification Services, Inc.
Above 1GHz High Frequency Substitution Measurement

Company: LG Electronics
Project #: 15I20527
Date: 4/22/2015
Test Engineer: R.Z
Configuration: EUT/ AC Charger/ Headset
Location: Chamber G
Mode: LTE_16QAM Band 26 Harmonics, 5MHz Bandwidth

Band
LTE26
5MHz
16QAM

f MHz	SG reading (dBm)	Ant. Pol. (H/V)	Distance (m)	Preamp (dB)	Filter (dB)	EIRP (dBm)	Limit (dBm)	Delta (dB)	Notes
Low Ch, 816.5									
1633.00	-21.0	V	3.0	37.0	1.0	-57.0	-13.0	-44.0	
2449.50	-20.6	V	3.0	36.4	1.0	-56.1	-13.0	-43.1	
3266.00	-21.5	V	3.0	36.2	1.0	-56.6	-13.0	-43.6	
1633.00	-23.6	H	3.0	37.0	1.0	-59.7	-13.0	-46.7	
2449.50	-24.5	H	3.0	36.4	1.0	-60.0	-13.0	-47.0	
3266.00	-21.8	H	3.0	36.2	1.0	-57.0	-13.0	-44.0	
Mid Ch, 831.5									
1663.00	-21.2	V	3.0	37.0	1.0	-57.2	-13.0	-44.2	
2494.50	-23.1	V	3.0	36.4	1.0	-58.5	-13.0	-45.5	
3326.00	-21.0	V	3.0	36.1	1.0	-56.1	-13.0	-43.1	
1663.00	-19.2	H	3.0	37.0	1.0	-55.2	-13.0	-42.2	
2494.50	-25.2	H	3.0	36.4	1.0	-60.6	-13.0	-47.6	
3326.00	-21.8	H	3.0	36.1	1.0	-56.9	-13.0	-43.9	
High Ch, 846.5									
1693.00	-22.6	V	3.0	37.0	1.0	-58.6	-13.0	-45.6	
2539.50	-23.3	V	3.0	36.4	1.0	-58.8	-13.0	-45.8	
3386.00	-21.7	V	3.0	36.1	1.0	-56.8	-13.0	-43.8	
1693.00	-21.6	H	3.0	37.0	1.0	-57.6	-13.0	-44.6	
2539.50	-25.5	H	3.0	36.4	1.0	-60.9	-13.0	-47.9	
3386.00	-20.9	H	3.0	36.1	1.0	-55.9	-13.0	-42.9	

This report shall not be reproduced except in full, without the written approval of UL Verification Services Inc.

UL Verification Services, Inc.
Above 1GHz High Frequency Substitution Measurement

Company: LG Electronics
Project #: 15I20527
Date: 4/22/2015
Test Engineer: R.Z
Configuration: EUT/ AC Charger/ Headset
Location: Chamber G
Mode: LTE_QPSK Band 26 Harmonics, 5MHz Bandwidth

Band LTE26 5MHz QPSK

f MHz	SG reading (dBm)	Ant. Pol. (H/V)	Distance (m)	Preamp (dB)	Filter (dB)	EIRP (dBm)	Limit (dBm)	Delta (dB)	Notes
Low Ch, 816.5									
1633.00	-20.2	V	3.0	37.0	1.0	-56.2	-13.0	-43.2	
2449.50	-23.2	V	3.0	36.4	1.0	-58.7	-13.0	-45.7	
3266.00	-22.4	V	3.0	36.2	1.0	-57.5	-13.0	-44.5	
1633.00	-22.3	H	3.0	37.0	1.0	-58.4	-13.0	-45.4	
2449.50	-23.0	H	3.0	36.4	1.0	-58.4	-13.0	-45.4	
3266.00	-21.9	H	3.0	36.2	1.0	-57.0	-13.0	-44.0	
Mid Ch, 831.5									
1663.00	-21.5	V	3.0	37.0	1.0	-57.5	-13.0	-44.5	
2494.50	-21.9	V	3.0	36.4	1.0	-57.3	-13.0	-44.3	
3326.00	-19.4	V	3.0	36.1	1.0	-54.5	-13.0	-41.5	
1663.00	-19.6	H	3.0	37.0	1.0	-55.6	-13.0	-42.6	
2494.50	-24.9	H	3.0	36.4	1.0	-60.3	-13.0	-47.3	
3326.00	-22.7	H	3.0	36.1	1.0	-57.8	-13.0	-44.8	
High Ch, 846.5									
1693.00	-19.6	V	3.0	37.0	1.0	-55.6	-13.0	-42.6	
2539.50	-23.5	V	3.0	36.4	1.0	-59.0	-13.0	-46.0	
3386.00	-20.9	V	3.0	36.1	1.0	-55.9	-13.0	-42.9	
1693.00	-20.9	H	3.0	37.0	1.0	-56.9	-13.0	-43.9	
2539.50	-25.0	H	3.0	36.4	1.0	-60.4	-13.0	-47.4	
3386.00	-21.8	H	3.0	36.1	1.0	-56.9	-13.0	-43.9	

This report shall not be reproduced except in full, without the written approval of UL Verification Services Inc.

UL Verification Services, Inc.
Above 1GHz High Frequency Substitution Measurement

Company: LG Electronics
Project #: 15I20527
Date: 4/22/2015
Test Engineer: R.Z
Configuration: EUT/ AC Charger/ Headset
Location: Chamber G
Mode: LTE_16QAM Band 26 Harmonics, 3MHz Bandwidth

Band

LTE26

3MHz

16QAM

f MHz	SG reading (dBm)	Ant. Pol. (H/V)	Distance (m)	Preamp (dB)	Filter (dB)	EIRP (dBm)	Limit (dBm)	Delta (dB)	Notes
Low Ch, 815.5									
1631.00	-18.7	V	3.0	37.0	1.0	-54.7	-13.0	-41.7	
2446.50	-23.6	V	3.0	36.4	1.0	-59.0	-13.0	-46.0	
3262.00	-21.3	V	3.0	36.2	1.0	-56.5	-13.0	-43.5	
1631.00	-20.7	H	3.0	37.0	1.0	-56.8	-13.0	-43.8	
2446.50	-24.9	H	3.0	36.4	1.0	-60.3	-13.0	-47.3	
3262.00	-22.2	H	3.0	36.2	1.0	-57.4	-13.0	-44.4	
Mid Ch, 831.5									
1663.00	-19.1	V	3.0	37.0	1.0	-55.1	-13.0	-42.1	
2494.50	-23.1	V	3.0	36.4	1.0	-58.5	-13.0	-45.5	
3326.00	-21.9	V	3.0	36.1	1.0	-57.0	-13.0	-44.0	
1663.00	-19.5	H	3.0	37.0	1.0	-55.5	-13.0	-42.5	
2494.50	-24.6	H	3.0	36.4	1.0	-60.0	-13.0	-47.0	
3326.00	-21.5	H	3.0	36.1	1.0	-56.6	-13.0	-43.6	
High Ch, 847.5									
1695.00	-22.0	V	3.0	37.0	1.0	-58.0	-13.0	-45.0	
2542.50	-24.4	V	3.0	36.4	1.0	-59.8	-13.0	-46.8	
3390.00	-22.7	V	3.0	36.1	1.0	-57.8	-13.0	-44.8	
1695.00	-23.3	H	3.0	37.0	1.0	-59.3	-13.0	-46.3	
2542.50	-25.0	H	3.0	36.4	1.0	-60.5	-13.0	-47.5	
3390.00	-22.6	H	3.0	36.1	1.0	-57.7	-13.0	-44.7	

This report shall not be reproduced except in full, without the written approval of UL Verification Services Inc.

UL Verification Services, Inc.
Above 1GHz High Frequency Substitution Measurement

Company: LG Electronics
Project #: 15I20527
Date: 4/22/2015
Test Engineer: R.Z
Configuration: EUT/ AC Charger/ Headset
Location: Chamber G
Mode: LTE_QPSK Band 26 Harmonics, 3MHz Bandwidth

Band LTE26 3MHz QPSK

f MHz	SG reading (dBm)	Ant. Pol. (H/V)	Distance (m)	Preamp (dB)	Filter (dB)	EIRP (dBm)	Limit (dBm)	Delta (dB)	Notes
Low Ch, 815.5									
1631.00	-19.4	V	3.0	37.0	1.0	-55.5	-13.0	-42.5	
2446.50	-24.3	V	3.0	36.4	1.0	-59.7	-13.0	-46.7	
3262.00	-22.0	V	3.0	36.2	1.0	-57.2	-13.0	-44.2	
1631.00	-24.3	H	3.0	37.0	1.0	-60.4	-13.0	-47.4	
2446.50	-24.2	H	3.0	36.4	1.0	-59.6	-13.0	-46.6	
3262.00	-21.0	H	3.0	36.2	1.0	-56.2	-13.0	-43.2	
Mid Ch, 831.5									
1663.00	-22.5	V	3.0	37.0	1.0	-58.5	-13.0	-45.5	
2494.50	-23.9	V	3.0	36.4	1.0	-59.3	-13.0	-46.3	
3326.00	-21.8	V	3.0	36.1	1.0	-57.0	-13.0	-44.0	
1663.00	-22.2	H	3.0	37.0	1.0	-58.2	-13.0	-45.2	
2494.50	-25.1	H	3.0	36.4	1.0	-60.5	-13.0	-47.5	
3326.00	-22.1	H	3.0	36.1	1.0	-57.2	-13.0	-44.2	
High Ch, 847.5									
1695.00	-19.9	V	3.0	37.0	1.0	-55.9	-13.0	-42.9	
2542.50	-24.0	V	3.0	36.4	1.0	-59.5	-13.0	-46.5	
3390.00	-22.0	V	3.0	36.1	1.0	-57.1	-13.0	-44.1	
1695.00	-20.8	H	3.0	37.0	1.0	-56.8	-13.0	-43.8	
2542.50	-25.8	H	3.0	36.4	1.0	-61.2	-13.0	-48.2	
3390.00	-23.0	H	3.0	36.1	1.0	-58.1	-13.0	-45.1	

This report shall not be reproduced except in full, without the written approval of UL Verification Services Inc.

UL Verification Services, Inc.
Above 1GHz High Frequency Substitution Measurement

Company: LG Electronics
Project #: 15I20527
Date: 4/22/2015
Test Engineer: R.Z
Configuration: EUT/ AC Charger/ Headset
Location: Chamber G
Mode: LTE_16QAM Band 26 Harmonics, 1.4MHz Bandwidth

Band LTE26 1.4MHz 16QAM

f MHz	SG reading (dBm)	Ant. Pol. (H/V)	Distance (m)	Preamp (dB)	Filter (dB)	EIRP (dBm)	Limit (dBm)	Delta (dB)	Notes
Low Ch, 814.7									
1629.40	-20.2	V	3.0	37.1	1.0	-56.3	-13.0	-43.3	
2444.10	-23.8	V	3.0	36.4	1.0	-59.2	-13.0	-46.2	
3258.80	-21.8	V	3.0	36.2	1.0	-57.0	-13.0	-44.0	
1629.40	-21.5	H	3.0	37.1	1.0	-57.6	-13.0	-44.6	
2444.10	-21.9	H	3.0	36.4	1.0	-57.4	-13.0	-44.4	
3258.80	-22.1	H	3.0	36.2	1.0	-57.3	-13.0	-44.3	
Mid Ch, 831.5									
1663.00	-22.2	V	3.0	37.0	1.0	-58.2	-13.0	-45.2	
2494.50	-23.9	V	3.0	36.4	1.0	-59.3	-13.0	-46.3	
3326.00	-21.6	V	3.0	36.1	1.0	-56.7	-13.0	-43.7	
1663.00	-20.8	H	3.0	37.0	1.0	-56.8	-13.0	-43.8	
2494.50	-26.0	H	3.0	36.4	1.0	-61.4	-13.0	-48.4	
3326.00	-22.0	H	3.0	36.1	1.0	-57.2	-13.0	-44.2	
High Ch, 848.3									
1696.60	-20.2	V	3.0	37.0	1.0	-56.2	-13.0	-43.2	
2544.90	-24.0	V	3.0	36.4	1.0	-59.4	-13.0	-46.4	
3393.20	-20.5	V	3.0	36.1	1.0	-55.6	-13.0	-42.6	
1696.60	-20.5	H	3.0	37.0	1.0	-56.5	-13.0	-43.5	
2544.90	-24.9	H	3.0	36.4	1.0	-60.3	-13.0	-47.3	
3393.20	-21.9	H	3.0	36.1	1.0	-57.0	-13.0	-44.0	

This report shall not be reproduced except in full, without the written approval of UL Verification Services Inc.

UL Verification Services, Inc.
Above 1GHz High Frequency Substitution Measurement

Company: LG Electronics
Project #: 15I20527
Date: 4/22/2015
Test Engineer: R.Z
Configuration: EUT/ AC Charger/ Headset
Location: Chamber G
Mode: LTE_QPSK Band 26 Harmonics, 1.4MHz Bandwidth

Band LTE26 1.4MHz QPSK

f MHz	SG reading (dBm)	Ant. Pol. (H/V)	Distance (m)	Preamp (dB)	Filter (dB)	EIRP (dBm)	Limit (dBm)	Delta (dB)	Notes
Low Ch, 814.7									
1629.40	-23.7	V	3.0	37.1	1.0	-59.8	-13.0	-46.8	
2444.10	-23.5	V	3.0	36.4	1.0	-58.9	-13.0	-45.9	
3258.80	-21.6	V	3.0	36.2	1.0	-56.8	-13.0	-43.8	
1629.40	-22.9	H	3.0	37.1	1.0	-59.0	-13.0	-46.0	
2444.10	-24.9	H	3.0	36.4	1.0	-60.4	-13.0	-47.4	
3258.80	-21.4	H	3.0	36.2	1.0	-56.6	-13.0	-43.6	
Mid Ch, 831.5									
1663.00	-22.0	V	3.0	37.0	1.0	-58.0	-13.0	-45.0	
2494.50	-23.3	V	3.0	36.4	1.0	-58.7	-13.0	-45.7	
3326.00	-22.8	V	3.0	36.1	1.0	-57.9	-13.0	-44.9	
1663.00	-20.5	H	3.0	37.0	1.0	-56.5	-13.0	-43.5	
2494.50	-26.7	H	3.0	36.4	1.0	-62.1	-13.0	-49.1	
3326.00	-22.0	H	3.0	36.1	1.0	-57.1	-13.0	-44.1	
High Ch, 848.3									
1696.60	-19.6	V	3.0	37.0	1.0	-55.6	-13.0	-42.6	
2544.90	-23.9	V	3.0	36.4	1.0	-59.3	-13.0	-46.3	
3393.20	-22.0	V	3.0	36.1	1.0	-57.0	-13.0	-44.0	
1696.60	-18.4	H	3.0	37.0	1.0	-54.4	-13.0	-41.4	
2544.90	-26.1	H	3.0	36.4	1.0	-61.5	-13.0	-48.5	
3393.20	-22.1	H	3.0	36.1	1.0	-57.2	-13.0	-44.2	

This report shall not be reproduced except in full, without the written approval of UL Verification Services Inc.

LTE Band 41

UL Verification Services, Inc.
Above 1GHz High Frequency Substitution Measurement

Company: LG
Project #: 15I20527
Date: 4/17/2015
Test Engineer: R.Z
Configuration: EUT , AC Adapter and Headset
Location: Chamber G
Mode: LTE_16QAM Band 41 Harmonics, 20MHz Bandwidth

Band

LTE41

20MHz

16QAM

f MHz	SG reading (dBm)	Ant. Pol. (H/V)	Distance (m)	Preamp (dB)	Filter (dB)	EIRP (dBm)	Limit (dBm)	Delta (dB)	Notes
Low Ch, 2506									
5012.00	-8.5	V	3.0	35.5	1.0	-42.9	-25.0	-17.9	
7518.00	-3.0	V	3.0	35.7	1.0	-37.8	-25.0	-12.8	
10024.00	-8.5	V	3.0	36.0	1.0	-43.5	-25.0	-18.5	
5012.00	-8.2	H	3.0	35.5	1.0	-42.6	-25.0	-17.6	
7518.00	-4.3	H	3.0	35.7	1.0	-39.1	-25.0	-14.1	
10024.00	-7.8	H	3.0	36.0	1.0	-42.8	-25.0	-17.8	
Mid Ch, 2593									
5186.00	-8.4	V	3.0	35.4	1.0	-42.8	-25.0	-17.8	
7779.00	2.8	V	3.0	35.8	1.0	-32.0	-25.0	-7.0	
10372.00	-6.3	V	3.0	35.8	1.0	-41.2	-25.0	-16.2	
5186.00	2.2	H	3.0	35.4	1.0	-32.3	-25.0	-7.3	
7779.00	1.9	H	3.0	35.8	1.0	-32.9	-25.0	-7.9	
10372.00	-6.6	H	3.0	35.8	1.0	-41.4	-25.0	-16.4	
High Ch, 2680									
5360.00	-12.0	V	3.0	35.4	1.0	-46.4	-25.0	-21.4	
8040.00	-2.5	V	3.0	35.8	1.0	-37.3	-25.0	-12.3	
10720.00	-10.5	V	3.0	35.7	1.0	-45.2	-25.0	-20.2	
5360.00	-8.3	H	3.0	35.4	1.0	-42.8	-25.0	-17.8	
8040.00	-2.6	H	3.0	35.8	1.0	-37.4	-25.0	-12.4	
10720.00	-8.3	H	3.0	35.7	1.0	-43.0	-25.0	-18.0	

This report shall not be reproduced except in full, without the written approval of UL Verification Services Inc.

UL Verification Services, Inc.
Above 1GHz High Frequency Substitution Measurement

Company: LG
Project #: 15I20527
Date: 4/17/2015
Test Engineer: R.Z
Configuration: EUT , AC Adapter and Headset
Location: Chamber G
Mode: LTE_QPSK Band 41 Harmonics, 20MHz Bandwidth

Band

LTE41

20MHz

QPSK

f MHz	SG reading (dBm)	Ant. Pol. (H/V)	Distance (m)	Preamp (dB)	Filter (dB)	EIRP (dBm)	Limit (dBm)	Delta (dB)	Notes
Low Ch, 2506									
5012.00	-9.7	V	3.0	35.5	1.0	-44.2	-25.0	-19.2	
7518.00	2.7	V	3.0	35.7	1.0	-32.1	-25.0	-7.1	
10024.00	-8.0	V	3.0	36.0	1.0	-43.0	-25.0	-18.0	
5012.00	-6.4	H	3.0	35.5	1.0	-40.9	-25.0	-15.9	
7518.00	-1.4	H	3.0	35.7	1.0	-36.2	-25.0	-11.2	
10024.00	-7.5	H	3.0	36.0	1.0	-42.5	-25.0	-17.5	
Mid Ch, 2593									
5186.00	-8.7	V	3.0	35.4	1.0	-43.1	-25.0	-18.1	
7779.00	1.7	V	3.0	35.8	1.0	-33.1	-25.0	-8.1	
10372.00	-1.6	V	3.0	35.8	1.0	-36.5	-25.0	-11.5	
5186.00	-8.2	H	3.0	35.4	1.0	-42.7	-25.0	-17.7	
7779.00	3.4	H	3.0	35.8	1.0	-31.4	-25.0	-6.4	
10372.00	-4.8	H	3.0	35.8	1.0	-39.7	-25.0	-14.7	
High Ch, 2680									
5360.00	-8.9	V	3.0	35.4	1.0	-43.3	-25.0	-18.3	
8040.00	-1.5	V	3.0	35.8	1.0	-36.3	-25.0	-11.3	
10720.00	-8.3	V	3.0	35.7	1.0	-43.0	-25.0	-18.0	
5360.00	-9.2	H	3.0	35.4	1.0	-43.6	-25.0	-18.6	
8040.00	-1.4	H	3.0	35.8	1.0	-36.2	-25.0	-11.2	
10720.00	-7.0	H	3.0	35.7	1.0	-41.7	-25.0	-16.7	

This report shall not be reproduced except in full, without the written approval of UL Verification Services Inc.

UL Verification Services, Inc.
Above 1GHz High Frequency Substitution Measurement

Company: LG
Project #: 15I20527
Date: 4/17/2015
Test Engineer: R.Z
Configuration: EUT , AC Adapter and Headset
Location: Chamber G
Mode: LTE_16QAM Band 41 Harmonics, 15MHz Bandwidth

Band

LTE41

15MHz

16QAM

f MHz	SG reading (dBm)	Ant. Pol. (H/V)	Distance (m)	Preamp (dB)	Filter (dB)	EIRP (dBm)	Limit (dBm)	Delta (dB)	Notes
Low Ch, 2503.5									
5007.00	-7.3	V	3.0	35.5	1.0	-41.8	-25.0	-16.8	
7510.50	-4.4	V	3.0	35.7	1.0	-39.2	-25.0	-14.2	
10014.00	-9.4	V	3.0	36.0	1.0	-44.4	-25.0	-19.4	
5007.00	-6.9	H	3.0	35.5	1.0	-41.4	-25.0	-16.4	
7510.50	-1.7	H	3.0	35.7	1.0	-36.5	-25.0	-11.5	
10014.00	-8.2	H	3.0	36.0	1.0	-43.2	-25.0	-18.2	
Mid Ch, 2593									
5186.00	-8.5	V	3.0	35.4	1.0	-42.9	-25.0	-17.9	
7779.00	3.0	V	3.0	35.8	1.0	-31.8	-25.0	-6.8	
10372.00	-6.3	V	3.0	35.8	1.0	-41.1	-25.0	-16.1	
5186.00	-4.2	H	3.0	35.4	1.0	-38.7	-25.0	-13.7	
7779.00	2.2	H	3.0	35.8	1.0	-32.5	-25.0	-7.5	
10372.00	-0.8	H	3.0	35.8	1.0	-35.6	-25.0	-10.6	
High Ch, 2682.5									
5365.00	-6.3	V	3.0	35.4	1.0	-40.7	-25.0	-15.7	
8047.50	-2.8	V	3.0	35.8	1.0	-37.6	-25.0	-12.6	
10730.00	-8.2	V	3.0	35.7	1.0	-42.9	-25.0	-17.9	
5365.00	-3.5	H	3.0	35.4	1.0	-37.9	-25.0	-12.9	
8047.50	-4.8	H	3.0	35.8	1.0	-39.6	-25.0	-14.6	
10730.00	-9.7	H	3.0	35.7	1.0	-44.4	-25.0	-19.4	

This report shall not be reproduced except in full, without the written approval of UL Verification Services Inc.

UL Verification Services, Inc.
Above 1GHz High Frequency Substitution Measurement

Company: LG
Project #: 15I20527
Date: 4/17/2015
Test Engineer: R.Z
Configuration: EUT , AC Adapter and Headset
Location: Chamber G
Mode: LTE_QPSK Band 41 Harmonics, 15MHz Bandwidth

Band
LTE41
15MHz
QPSK

f MHz	SG reading (dBm)	Ant. Pol. (H/V)	Distance (m)	Preamp (dB)	Filter (dB)	EIRP (dBm)	Limit (dBm)	Delta (dB)	Notes
Low Ch, 2503.5									
5007.00	-8.4	V	3.0	35.5	1.0	-42.8	-25.0	-17.8	
7510.50	-1.1	V	3.0	35.7	1.0	-35.9	-25.0	-10.9	
10014.00	-7.7	V	3.0	36.0	1.0	-42.7	-25.0	-17.7	
5007.00	-6.8	H	3.0	35.5	1.0	-41.3	-25.0	-16.3	
7510.50	1.1	H	3.0	35.7	1.0	-33.6	-25.0	-8.6	
10014.00	-8.7	H	3.0	36.0	1.0	-43.7	-25.0	-18.7	
Mid Ch, 2593									
5186.00	-8.6	V	3.0	35.4	1.0	-43.0	-25.0	-18.0	
7779.00	1.8	V	3.0	35.8	1.0	-33.0	-25.0	-8.0	
10372.00	-2.8	V	3.0	35.8	1.0	-37.7	-25.0	-12.7	
5186.00	-7.6	H	3.0	35.4	1.0	-42.0	-25.0	-17.0	
7779.00	2.0	H	3.0	35.8	1.0	-32.7	-25.0	-7.7	
10372.00	-4.2	H	3.0	35.8	1.0	-39.0	-25.0	-14.0	
High Ch, 2682.5									
5365.00	-10.1	V	3.0	35.4	1.0	-44.5	-25.0	-19.5	
8047.50	-2.8	V	3.0	35.8	1.0	-37.6	-25.0	-12.6	
10730.00	-9.9	V	3.0	35.7	1.0	-44.6	-25.0	-19.6	
5365.00	-9.5	H	3.0	35.4	1.0	-43.9	-25.0	-18.9	
8047.50	-2.6	H	3.0	35.8	1.0	-37.4	-25.0	-12.4	
10730.00	-8.5	H	3.0	35.7	1.0	-43.2	-25.0	-18.2	

This report shall not be reproduced except in full, without the written approval of UL Verification Services Inc.

UL Verification Services, Inc.
Above 1GHz High Frequency Substitution Measurement

Company: LG
Project #: 15I20527
Date: 4/17/2015
Test Engineer: R.Z
Configuration: EUT , AC Adapter and Headset
Location: Chamber G
Mode: LTE_16QAM Band 41 Harmonics, 10MHz Bandwidth

Band
LTE41
10MHz
16QAM

f MHz	SG reading (dBm)	Ant. Pol. (H/V)	Distance (m)	Preamp (dB)	Filter (dB)	EIRP (dBm)	Limit (dBm)	Delta (dB)	Notes
Low Ch, 2501									
5002.00	-6.9	V	3.0	35.5	1.0	-41.3	-25.0	-16.3	
7503.00	-2.9	V	3.0	35.7	1.0	-37.6	-25.0	-12.6	
10004.00	-8.0	V	3.0	36.0	1.0	-43.0	-25.0	-18.0	
5002.00	-7.7	H	3.0	35.5	1.0	-42.1	-25.0	-17.1	
7503.00	-5.1	H	3.0	35.7	1.0	-39.8	-25.0	-14.8	
10004.00	-7.4	H	3.0	36.0	1.0	-42.4	-25.0	-17.4	
Mid Ch, 2593									
5186.00	-8.3	V	3.0	35.4	1.0	-42.7	-25.0	-17.7	
7779.00	1.6	V	3.0	35.8	1.0	-33.2	-25.0	-8.2	
10372.00	0.3	V	3.0	35.8	1.0	-34.6	-25.0	-9.6	
5186.00	-5.1	H	3.0	35.4	1.0	-39.6	-25.0	-14.6	
7779.00	3.6	H	3.0	35.8	1.0	-31.2	-25.0	-6.2	
10372.00	-4.8	H	3.0	35.8	1.0	-39.6	-25.0	-14.6	
High Ch, 2685									
5370.00	-9.7	V	3.0	35.4	1.0	-44.2	-25.0	-19.2	
8055.00	-1.3	V	3.0	35.8	1.0	-36.1	-25.0	-11.1	
10740.00	-10.5	V	3.0	35.7	1.0	-45.2	-25.0	-20.2	
5370.00	-7.9	H	3.0	35.4	1.0	-42.3	-25.0	-17.3	
8055.00	-2.8	H	3.0	35.8	1.0	-37.6	-25.0	-12.6	
10740.00	-10.5	H	3.0	35.7	1.0	-45.2	-25.0	-20.2	

This report shall not be reproduced except in full, without the written approval of UL Verification Services Inc.

UL Verification Services, Inc.
Above 1GHz High Frequency Substitution Measurement

Company: LG
Project #: 15I20527
Date: 4/17/2015
Test Engineer: R.Z
Configuration: EUT , AC Adapter and Headset
Location: Chamber G
Mode: LTE_QPSK Band 41 Harmonics, 10MHz Bandwidth

Band
LTE41
10MHz
QPSK

f MHz	SG reading (dBm)	Ant. Pol. (H/V)	Distance (m)	Preamp (dB)	Filter (dB)	EIRP (dBm)	Limit (dBm)	Delta (dB)	Notes
Low Ch, 2501									
5002.00	-6.9	V	3.0	35.5	1.0	-41.3	-25.0	-16.3	
7503.00	-2.9	V	3.0	35.7	1.0	-37.7	-25.0	-12.7	
10004.00	-8.0	V	3.0	36.0	1.0	-43.0	-25.0	-18.0	
5002.00	-6.5	H	3.0	35.5	1.0	-40.9	-25.0	-15.9	
7503.00	-1.7	H	3.0	35.7	1.0	-36.4	-25.0	-11.4	
10004.00	-10.2	H	3.0	36.0	1.0	-45.2	-25.0	-20.2	
Mid Ch, 2593									
5186.00	-9.2	V	3.0	35.4	1.0	-43.6	-25.0	-18.6	
7779.00	2.2	V	3.0	35.8	1.0	-32.6	-25.0	-7.6	
10372.00	-3.3	V	3.0	35.8	1.0	-38.2	-25.0	-13.2	
5186.00	-14.1	H	3.0	35.4	1.0	-48.6	-25.0	-23.6	
7779.00	-8.0	H	3.0	35.8	1.0	-42.8	-25.0	-17.8	
10372.00	-8.7	H	3.0	35.8	1.0	-43.5	-25.0	-18.5	
High Ch, 2685									
5370.00	-9.2	V	3.0	35.4	1.0	-43.7	-25.0	-18.7	
8055.00	0.0	V	3.0	35.8	1.0	-34.8	-25.0	-9.8	
10740.00	-8.0	V	3.0	35.7	1.0	-42.7	-25.0	-17.7	
5370.00	-6.7	H	3.0	35.4	1.0	-41.1	-25.0	-16.1	
8055.00	-3.7	H	3.0	35.8	1.0	-38.5	-25.0	-13.5	
10740.00	-10.6	H	3.0	35.7	1.0	-45.3	-25.0	-20.3	

This report shall not be reproduced except in full, without the written approval of UL Verification Services Inc.

UL Verification Services, Inc.
Above 1GHz High Frequency Substitution Measurement

Company: LG
Project #: 15I20527
Date: 4/17/2015
Test Engineer: R.Z
Configuration: EUT , AC Adapter and Headset
Location: Chamber G
Mode: LTE_QPSK Band 41 Harmonics, 5MHz Bandwidth

Band
LTE41
5MHz
16QAM

f MHz	SG reading (dBm)	Ant. Pol. (H/V)	Distance (m)	Preamp (dB)	Filter (dB)	EIRP (dBm)	Limit (dBm)	Delta (dB)	Notes
Low Ch, 2498.5									
4997.00	-5.3	V	3.0	35.5	1.0	-39.7	-25.0	-14.7	
7495.50	-2.1	V	3.0	35.7	1.0	-36.8	-25.0	-11.8	
9994.00	-5.2	V	3.0	36.0	1.0	-40.2	-25.0	-15.2	
4997.00	-7.7	H	3.0	35.5	1.0	-42.1	-25.0	-17.1	
7495.50	-2.8	H	3.0	35.7	1.0	-37.5	-25.0	-12.5	
9994.00	-9.4	H	3.0	36.0	1.0	-44.4	-25.0	-19.4	
Mid Ch, 2593									
5186.00	-14.7	V	3.0	35.4	1.0	-49.1	-25.0	-24.1	
7779.00	-11.4	V	3.0	35.8	1.0	-46.2	-25.0	-21.2	
10372.00	-11.1	V	3.0	35.8	1.0	-46.0	-25.0	-21.0	
5186.00	-14.8	H	3.0	35.4	1.0	-49.3	-25.0	-24.3	
7779.00	-11.3	H	3.0	35.8	1.0	-46.1	-25.0	-21.1	
10372.00	-10.0	H	3.0	35.8	1.0	-44.8	-25.0	-19.8	
High Ch, 2687.5									
5375.00	-10.3	V	3.0	35.4	1.0	-44.8	-25.0	-19.8	
8062.50	-1.3	V	3.0	35.8	1.0	-36.1	-25.0	-11.1	
10750.00	-9.7	V	3.0	35.7	1.0	-44.4	-25.0	-19.4	
5375.00	-8.3	H	3.0	35.4	1.0	-42.8	-25.0	-17.8	
8062.50	-3.3	H	3.0	35.8	1.0	-38.1	-25.0	-13.1	
10750.00	-10.3	H	3.0	35.7	1.0	-45.0	-25.0	-20.0	

This report shall not be reproduced except in full, without the written approval of UL Verification Services Inc.

UL Verification Services, Inc.
Above 1GHz High Frequency Substitution Measurement

Company: LG
Project #: 15I20527
Date: 4/17/2015
Test Engineer: R.Z
Configuration: EUT , AC Adapter and Headset
Location: Chamber G
Mode: LTE_QPSK Band 41 Harmonics, 5MHz Bandwidth

Band
LTE41
5MHz
QPSK

f MHz	SG reading (dBm)	Ant. Pol. (H/V)	Distance (m)	Preamp (dB)	Filter (dB)	EIRP (dBm)	Limit (dBm)	Delta (dB)	Notes
Low Ch, 2498.5									
4997.00	-8.3	V	3.0	35.5	1.0	-42.7	-25.0	-17.7	
7495.50	-3.0	V	3.0	35.7	1.0	-37.8	-25.0	-12.8	
9994.00	-7.2	V	3.0	36.0	1.0	-42.2	-25.0	-17.2	
4997.00	-6.1	H	3.0	35.5	1.0	-40.5	-25.0	-15.5	
7495.50	-3.6	H	3.0	35.7	1.0	-38.3	-25.0	-13.3	
9994.00	-6.1	H	3.0	36.0	1.0	-41.1	-25.0	-16.1	
Mid Ch, 2593									
5186.00	-9.0	V	3.0	35.4	1.0	-43.4	-25.0	-18.4	
7779.00	0.4	V	3.0	35.8	1.0	-34.4	-25.0	-9.4	
10372.00	-1.4	V	3.0	35.8	1.0	-36.3	-25.0	-11.3	
5186.00	-8.3	H	3.0	35.4	1.0	-42.7	-25.0	-17.7	
7779.00	1.5	H	3.0	35.8	1.0	-33.3	-25.0	-8.3	
10372.00	-6.5	H	3.0	35.8	1.0	-41.4	-25.0	-16.4	
High Ch, 2687.5									
5375.00	-9.5	V	3.0	35.4	1.0	-44.0	-25.0	-19.0	
8062.50	-2.3	V	3.0	35.8	1.0	-37.1	-25.0	-12.1	
10750.00	-8.5	V	3.0	35.7	1.0	-43.1	-25.0	-18.1	
5375.00	-9.3	H	3.0	35.4	1.0	-43.8	-25.0	-18.8	
8062.50	-4.1	H	3.0	35.8	1.0	-38.9	-25.0	-13.9	
10750.00	-9.3	H	3.0	35.7	1.0	-44.0	-25.0	-19.0	

This report shall not be reproduced except in full, without the written approval of UL Verification Services Inc.