FCC CFR47 PART 22 SUBPART H
FCC CFR47 PART 24 SUBPART E
FCC CFR47 PART 27 SUBPART E
FCC CFR47 PART 27 SUBPART L

C2PC CERTIFICATION TEST REPORT

FOR

GSM/WCDMA/LTE Phone + Bluetooth, DTS/UNII a/b/g/n and NFC

MODEL NUMBER: LG-D725, D725, LGD725

FCC ID: ZNFD725

REPORT NUMBER: 14U18112-1

ISSUE DATE: JUNE 30, 2014

Prepared for

LG ELECTRONICS MOBILECOMM U.S.A., INC

1000 SYLVAN AVENUE

ENGLEWOOD CLIFFS,

NEW JERSEY, 07632, U.S.A

Prepared by

UL VERIFICATION SERVICES, INC
47173 BENICIA STREET
FREMONT, CA 94538, U.S.A.
TEL: (510) 771-1000
FAX: (510) 661-0888

NVLAP LAB CODE 200065-0

Revision History

Rev.	Issue Date	Revisions	Revised By
--	6/30/14	Initial Issue	P. Zhang

UL VERIFICATION SERVICES INC. FORM NO: CCSUP4701I
47173 BENICIA STREET, FREMONT, CA 94538, USA TEL: (510) 771-1000 FAX: (510) 661-0888

This report shall not be reproduced except in full, without the written approval of UL Verification Services Inc.

TABLE OF CONTENTS

1. ATTESTATION OF TEST RESULTS 5
2. TEST METHODOLOGY 6
3. FACILITIES AND ACCREDITATION 6
4. CALIBRATION AND UNCERTAINTY 6
4.1. MEASURING INSTRUMENT CALIBRATION 6
4.2. SAMPLE CALCULATION 6
4.3. MEASUREMENT UNCERTAINTY 6
5. EQUIPMENT UNDER TEST 7
5.1. DESCRIPTION OF EUT 7
5.2. MAXIMUM OUTPUT POWER 7
5.3. MAXIMUM OUTPUT POWER (LTE) 8
5.4. DESCRIPTION OF AVAILABLE ANTENNAS 11
5.5. DESCRIPTION OF TEST SETUP 12
6. TEST AND MEASUREMENT EQUIPMENT 15
7. Summary Table 16
RF POWER OUTPUT VERIFICATION 17
7.1. GSM/GPRS/EDGE 17
7.1.1. GSM OUTPUT POWER RESULT 18
7.2. UMTS REL 99 19
7.2.1. UMTS REL 99 OUTPUT POWER RESULT 19
7.3. UMTS HSDPA 20
7.3.1. UMTS HSDPA OUTPUT POWER RESULT 20
7.3.2. UMTS HSUPA 22
7.3.3. UMTS HSUPA OUTPUT POWER RESULT 23
7.4. LTE OUTPUT VERIFICATION 24
7.4.1. LTE OUTPUT RESULT 24
8. RADIATED TEST RESULTS 31
8.1. RADIATED POWER (ERP & EIRP) 31
8.1.1. ERP/EIRP Results 32
8.1.2. LTE ERP/EIRP Results 34

UL VERIFICATION SERVICES INC. FORM NO: CCSUP4701I
47173 BENICIA STREET, FREMONT, CA 94538, USA TEL: (510) 771-1000 FAX: (510) 661-0888

This report shall not be reproduced except in full, without the written approval of UL Verification Services Inc.

8.1.3. ERP/EIRP DATA 38
8.2. FIELD STRENGTH OF SPURIOUS RADIATION.....70
8.2.1. SPURIOUS RADIATION DATA 71
9. SETUP PHOTOS 103

UL VERIFICATION SERVICES INC. FORM NO: CCSUP4701I
47173 BENICIA STREET, FREMONT, CA 94538, USA TEL: (510) 771-1000 FAX: (510) 661-0888

This report shall not be reproduced except in full, without the written approval of UL Verification Services Inc.

1. ATTESTATION OF TEST RESULTS

COMPANY NAME: LG ELECTRONICS MOBILECOMM U.S.A., INC.

EUT DESCRIPTION: GSM/WCDMA/LTE Phone + Bluetooth, DTS/UNII a/b/g/n and NFC

MODEL: LG-D725, D725, LGD725

SERIAL NUMBER: 17T3W (Radiated)

DATE TESTED: JUNE 25 – 30, 2014

APPLICABLE STANDARDS	
STANDARD	**TEST RESULTS**
FCC PART 22H, 24E, 27E and 27L	PASS

UL Verification Services Inc. tested the above equipment in accordance with the requirements set forth in the above standards. All indications of Pass/Fail in this report are opinions expressed by UL Verification Services Inc. based on interpretations and/or observations of test results. Measurement Uncertainties were not taken into account and are published for informational purposes only. The test results show that the equipment tested is capable of demonstrating compliance with the requirements as documented in this report.

Note: The results documented in this report apply only to the tested sample, under the conditions and modes of operation as described herein. This document may not be altered or revised in any way unless done so by UL Verification Services Inc. and all revisions are duly noted in the revisions section. Any alteration of this document not carried out by UL Verification Services Inc. will constitute fraud and shall nullify the document. This report must not be used by the client to claim product certification, approval, or endorsement by NVLAP, NIST, any agency of the Federal Government, or any agency of any government.

Approved & Released For

UL Verification Services Inc. By:

PENG ZHANG
CONSUMER TECHNOLOGY DIVISION

PROJECT LEAD
UL Verification Services Inc.

Tested By:

CHARLES VERGONIO
CONSUMER TECHNOLOGY DIVISION

TEST ENGINEER
UL Verification Services Inc.

UL VERIFICATION SERVICES INC. FORM NO: CCSUP4701I
47173 BENICIA STREET, FREMONT, CA 94538, USA TEL: (510) 771-1000 FAX: (510) 661-0888

This report shall not be reproduced except in full, without the written approval of UL Verification Services Inc.

2. TEST METHODOLOGY

The tests documented in this report were performed in accordance with TIA-603-C, FCC CFR 47 Part 22, FCC CFR Part 24, FCC CFR 47 Part 27.

3. FACILITIES AND ACCREDITATION

The test sites and measurement facilities used to collect data are located at 47173 Benicia Street, Fremont, California, USA.

UL Verification Services Inc. is accredited by NVLAP, Laboratory Code 200065-0. The full scope of accreditation can be viewed at http://www.ul.com

4. CALIBRATION AND UNCERTAINTY

4.1. MEASURING INSTRUMENT CALIBRATION

The measuring equipment utilized to perform the tests documented in this report has been calibrated in accordance with the manufacturer's recommendations, and is traceable to recognized national standards

4.2. SAMPLE CALCULATION

Where relevant, the following sample calculation is provided:

Field Strength (dBuV/m) = Measured Voltage (dBuV) + Antenna Factor (dB/m) + Cable Loss (dB) – Preamp Gain (dB)

36.5 dBuV + 18.7 dB/m + 0.6 dB – 26.9 dB = 28.9 dBuV/m

4.3. MEASUREMENT UNCERTAINTY

Where relevant, the following measurement uncertainty levels have been estimated for tests performed on the apparatus:

PARAMETER	UNCERTAINTY
Conducted Disturbance, 0.15 to 30 MHz	3.52 dB
Radiated Disturbance, 30 to 18000 MHz	4.94 dB

Uncertainty figures are valid to a confidence level of 95%.

UL VERIFICATION SERVICES INC. FORM NO: CCSUP4701I
47173 BENICIA STREET, FREMONT, CA 94538, USA TEL: (510) 771-1000 FAX: (510) 661-0888

This report shall not be reproduced except in full, without the written approval of UL Verification Services Inc.

5. EQUIPMENT UNDER TEST

5.1. DESCRIPTION OF EUT

The EUT is a GSM/WCDMA/LTE Phone + Bluetooth, DTS/UNII a/b/g/n and NFC.

5.2. MAXIMUM OUTPUT POWER

The transmitter has a maximum peak conducted and radiated ERP / EIRP output powers as follows:

FCC Part 22/24						
Band	Frequency Range(MHz)	Modulation Peak	Conducted		Radiated	
			Peak (dBm)	Peak (mW)	Peak (dBm)	Peak (mW)
GSM850	824~849	GMSK	33.1	2041.73		
	824~849	GPRS	32.9	1949.84	29.30	851.13
	824~849	EGPRS	26.7	467.73	27.39	548.27
GSM1900	1850~1910	GMSK	30.7	1174.89		
	1850~1910	GPRS	30.7	1174.89	27.95	623.73
	1850~1910	EGPRS	26.2	416.86	26.10	407.38

FCC Part 22/24						
Band	Frequency Range(MHz)	Modulation Peak	Conducted		Radiated	
			Avg (dBm)	Avg (mW)	Avg (dBm)	Avg (mW)
Band 5	824~849	REL99	24.7	295.12	21.56	143.21
	824~849	HSDPA	24.7	295.12	20.98	125.31
	824~849	HSUPA	24.3	269.15		
Band 2	1850~1910	REL99	24.2	263.02	22.65	184.07
	1850~1910	HSDPA	24.2	263.02	22.67	184.92
	1850~1910	HSUPA	24.1	257.03		

UL VERIFICATION SERVICES INC. FORM NO: CCSUP4701I
47173 BENICIA STREET, FREMONT, CA 94538, USA TEL: (510) 771-1000 FAX: (510) 661-0888

This report shall not be reproduced except in full, without the written approval of UL Verification Services Inc.

5.3. MAXIMUM OUTPUT POWER (LTE)

The transmitter has a maximum peak conducted and radiated ERP/EIRP output powers as follows:

FCC Part 27							
Band	Frequency Range(MHz)	BandWidth (MHz)	Modulation	Conducted		Radiated	
			Peak	Avg (dBm)	Avg (mW)	Avg (dBm)	Avg (mW)
LTE17	704~716	10MHz	QPSK	24.56	285.75	21.09	128.52
	704~716	10MHz	16QAM	23.55	226.46	19.94	98.62

FCC Part 27							
Band	Frequency Range(MHz)	BandWidth (MHz)	Modulation	Conducted		Radiated	
			Peak	Avg (dBm)	Avg (mW)	Avg (dBm)	Avg (mW)
LTE17	704~716	5MHz	QPSK	24.7	295.12	20.60	114.81
	704~716	5MHz	16QAM	23.66	232.27	19.80	95.49

FCC Part 22/2 4/27							
Band	Frequency Range(MHz)	BandWidth (MHz)	Modulation	Conducted		Radiated	
			Peak	Avg (dBm)	Avg (mW)	Avg (dBm)	Avg (mW)
LTE7	2500~2570	20MHz	QPSK	24.1	257.03	20.78	119.67
	2500~2570	20MHz	16QAM	23.1	204.17	20.01	100.23

FCC Part 22/2 4/27							
Band	Frequency Range(MHz)	BandWidth (MHz)	Modulation	Conducted		Radiated	
			Peak	Avg (dBm)	Avg (mW)	Avg (dBm)	Avg (mW)
LTE7	2500~2570	15MHz	QPSK	24.1	257.03	20.53	112.97
	2500~2570	15MHz	16QAM	22.8	190.54	19.90	97.72

UL VERIFICATION SERVICES INC. FORM NO: CCSUP4701I
47173 BENICIA STREET, FREMONT, CA 94538, USA TEL: (510) 771-1000 FAX: (510) 661-0888

This report shall not be reproduced except in full, without the written approval of UL Verification Services Inc.

FCC Part 22/2 4/27							
Band	Frequency Range(MHz)	BandWidth (MHz)	Modulation	Conducted		Radiated	
			Peak	Avg (dBm)	Avg (mW)	Avg (dBm)	Avg (mW)
LTE7	2500~2570	10MHz	QPSK	24.2	263.02	20.86	121.89
	2500~2570	10MHz	16QAM	22.9	194.98	19.61	91.41

FCC Part 22/2 4/27							
Band	Frequency Range(MHz)	BandWidth (MHz)	Modulation	Conducted		Radiated	
			Peak	Avg (dBm)	Avg (mW)	Avg (dBm)	Avg (mW)
LTE7	2500~2570	5MHz	QPSK	24.2	263.02	20.75	118.85
	2500~2570	5MHz	16QAM	22.8	190.54	19.51	89.33

FCC Part 27							
Band	Frequency Range(MHz)	BandWidth (MHz)	Modulation	Conducted		Radiated	
			Peak	Avg (dBm)	Avg (mW)	Avg (dBm)	Avg (mW)
LTE5	824~849	10MHz	QPSK	24.66	292.41	21.88	154.17
	824~849	10MHz	16QAM	23.59	228.55	21.50	141.25

FCC Part 27							
Band	Frequency Range(MHz)	BandWidth (MHz)	Modulation	Conducted		Radiated	
			Peak	Avg (dBm)	Avg (mW)	Avg (dBm)	Avg (mW)
LTE5	824~849	5MHz	QPSK	24.65	291.74	20.62	115.34
	824~849	5MHz	16QAM	23.52	224.90	19.82	95.94

FCC Part 27							
Band	Frequency Range(MHz)	BandWidth (MHz)	Modulation	Conducted		Radiated	
			Peak	Avg (dBm)	Avg (mW)	Avg (dBm)	Avg (mW)
LTE4	1710~1755	10MHz	QPSK	24.53	283.79	25.63	365.59
	1710~1755	10MHz	16QAM	23.70	234.42	24.52	283.13

UL VERIFICATION SERVICES INC. FORM NO: CCSUP4701I
47173 BENICIA STREET, FREMONT, CA 94538, USA TEL: (510) 771-1000 FAX: (510) 661-0888

This report shall not be reproduced except in full, without the written approval of UL Verification Services Inc.

FCC Part 27							
Band	Frequency Range(MHz)	BandWidth (MHz)	Modulation	Conducted		Radiated	
			Peak	Avg (dBm)	Avg (mW)	Avg (dBm)	Avg (mW)
LTE4	1710~1755	5MHz	QPSK	24.67	293.08	26.31	427.56
	1710~1755	5MHz	16QAM	23.56	226.98	25.95	393.55

FCC Part 24							
Band	Frequency Range(MHz)	BandWidth (MHz)	Modulation	Conducted		Radiated	
			Peak	Avg (dBm)	Avg (mW)	Avg (dBm)	Avg (mW)
LTE2	1850~1910	10MHz	QPSK	24.70	295.12	24.65	291.74
	1850~1910	10MHz	16QAM	23.70	234.42	23.75	237.13

FCC Part 24							
Band	Frequency Range(MHz)	BandWidth (MHz)	Modulation	Conducted		Radiated	
			Peak	Avg (dBm)	Avg (mW)	Avg (dBm)	Avg (mW)
LTE2	1850~1910	5MHz	QPSK	24.70	295.12	24.45	278.61
	1850~1910	5MHz	16QAM	23.70	234.42	23.45	221.30

UL VERIFICATION SERVICES INC. FORM NO: CCSUP4701I
47173 BENICIA STREET, FREMONT, CA 94538, USA TEL: (510) 771-1000 FAX: (510) 661-0888

This report shall not be reproduced except in full, without the written approval of UL Verification Services Inc.

5.4. DESCRIPTION OF AVAILABLE ANTENNAS

The radio utilizes a PIFA antenna for the [List the bands supported] with a maximum peak gain as follow:

Frequency (MHz)	Peak Gain (dBi)
Band 5, 824~849MHz	-2.08
Band 2, 1850~1910MHz	0.72
Band 4, 1710~1755MHz	0.03
Band 17, 704~716MHz	-2.35
LTE7, 2500~2570MHz	-4.28

UL VERIFICATION SERVICES INC. FORM NO: CCSUP4701I
47173 BENICIA STREET, FREMONT, CA 94538, USA TEL: (510) 771-1000 FAX: (510) 661-0888

This report shall not be reproduced except in full, without the written approval of UL Verification Services Inc.

5.5. DESCRIPTION OF TEST SETUP

SUPPORT EQUIPMENT

Support Equipment List				
Description	Manufacturer	Model	Serial Number	FCC ID
AC Adapter	LG ELECTRONICS	MCS-01WD	DB390078751	N/A
Earphone	LG ELECTRONICS	N/A	N/A	N/A

I/O CABLES (CONDUCTED SETUP)

I/O Cable List						
Cable No	Port	# of identical ports	Connector Type	Cable Type	Cable Length (m)	Remarks
1	RF Out	1	Spectrum Analyzer	Shielded	None	NA
2	Antenna Port	1	EUT	Shielded	0.1m	NA
3	RF In/Out	1	Communication Test Set	Shielded	1m	NA

I/O CABLES (RADIATED SETUP)

I/O CABLE LIST						
Cable No.	Port	# of Identical Ports	Connector Type	Cable Type	Cable Length	Remarks
1	USB	1	AC Adapter	Un-shielded	1.2m	No
2	Jack	1	Headset	Shielded	1m	No
3	RF In/out	1	Communication Test Set	Un-shielded	2m	Yes

TEST SETUP

The EUT is continuously communicated to the call box during the tests.

UL VERIFICATION SERVICES INC. FORM NO: CCSUP4701I
47173 BENICIA STREET, FREMONT, CA 94538, USA TEL: (510) 771-1000 FAX: (510) 661-0888

This report shall not be reproduced except in full, without the written approval of UL Verification Services Inc.

SETUP DIAGRAM FOR TESTS (CONDUCTED TEST SETUP)

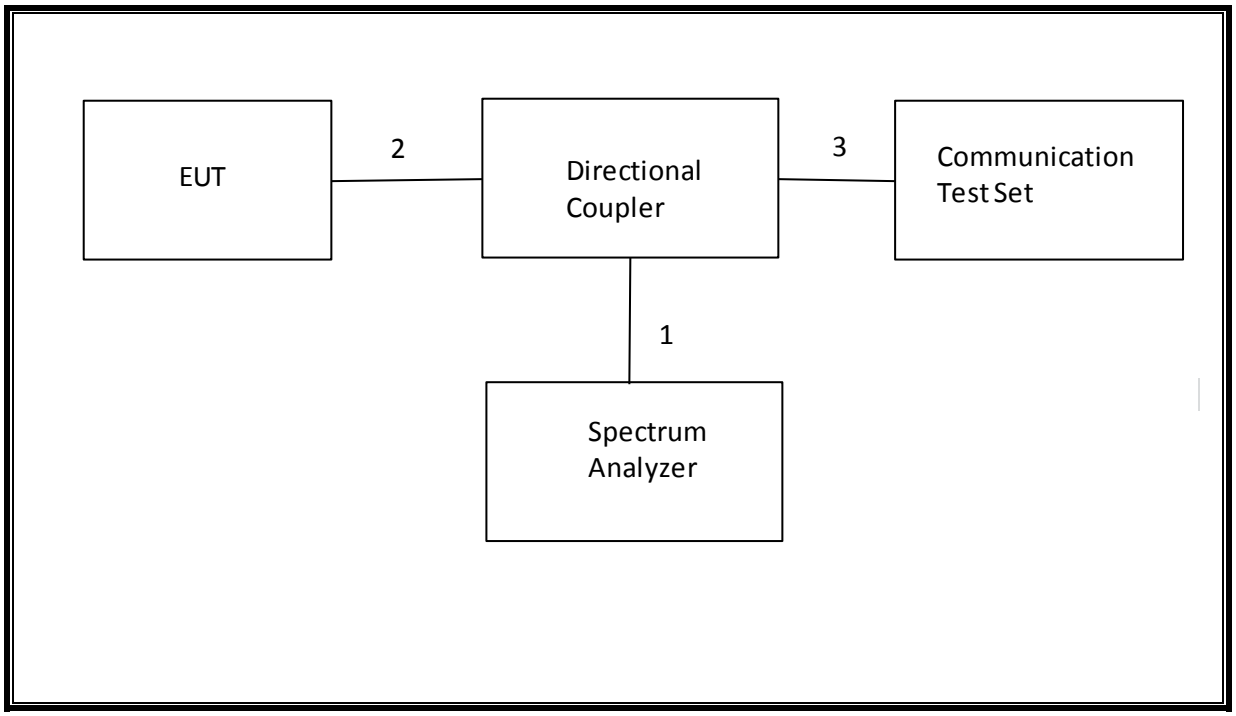

UL VERIFICATION SERVICES INC. FORM NO: CCSUP4701I
47173 BENICIA STREET, FREMONT, CA 94538, USA TEL: (510) 771-1000 FAX: (510) 661-0888

This report shall not be reproduced except in full, without the written approval of UL Verification Services Inc.

SETUP DIAGRAM FOR TESTS (RADIATED TEST SETUP)

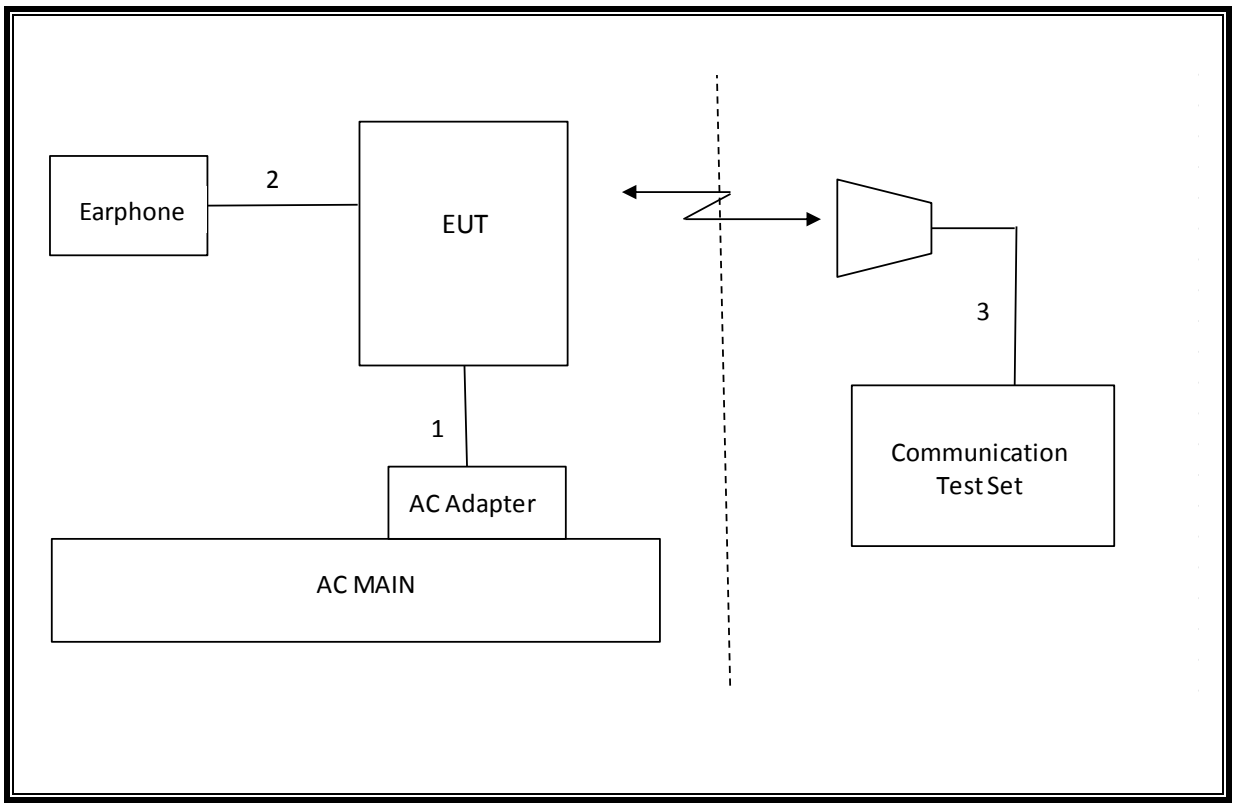

UL VERIFICATION SERVICES INC. FORM NO: CCSUP4701I
47173 BENICIA STREET, FREMONT, CA 94538, USA TEL: (510) 771-1000 FAX: (510) 661-0888

This report shall not be reproduced except in full, without the written approval of UL Verification Services Inc.

6. TEST AND MEASUREMENT EQUIPMENT

The following test and measurement equipment was utilized for the tests documented in this report:

TEST EQUIPMENT LIST				
Description	**Manufacturer**	**Model**	**Asset**	**Cal Due**
Spectrum Analyzer, 44 GHz	Agilent / HP	E4446A	C01179	02/26/15
Antenna, Bilog, 2 GHz	Sunol Sciences	JB1	C01011	08/14/14
Antenna, Horn, 18 GHz	EMCO	3115	C00783	10/25/14
Antenna, Horn, 18 GHz	EMCO	3115	C00784	09/25/14
Highpass Filter, 2.7 GHz	Micro-Tronics	HPM13194	N02687	CNR
Highpass Filter, 1.5 GHz	Micro-Tronics	HPM13193	N02688	CNR
Temperature / Humidity Chamber	Thermotron	SE 600-10-10	C00930	01/09/15
Communications Test Set	R&S	CMW500	T159	07/02/14
DC power supply, 8 V @ 3 A or 15 V	Agilent / HP	E3610A	None	CNR
Vector signal generator, 6 GHz	Agilent / HP	E4438C	None	07/06/14
Antenna, Tuned Dipole 400~1000	ETS	3121C DB4	C00993	02/14/15
Directional Coupler	RF-Lambda	RFDC5M06G15	None	CNR

UL VERIFICATION SERVICES INC. FORM NO: CCSUP4701I
47173 BENICIA STREET, FREMONT, CA 94538, USA TEL: (510) 771-1000 FAX: (510) 661-0888

This report shall not be reproduced except in full, without the written approval of UL Verification Services Inc.

7. Summary Table

FCC Part Section	RSS Section(s)	Test Description	Test Limit	Test Condition	Test Result	Worst Case
2.1049	N/A	Occupied Band width (99%)	N/A	Conducted	Pass	see original
22.917(a) 24.238(a) 27.53(g) 90.691	RSS-132(4.5.1) RSS-133(6.5.1) RSS-139(6.5.1)	Band Edge / Conducted Spurious Emission	-13dBm		Pass	see original
27.53(m)	RSS-199(4.5)		-25dBm		Pass	see original
2.1046	N/A	Conducted output power	N/A		Pass	see original
27.53(m)	RSS-199(4.5)	Emission Mask			Pass	see original
22.355 24.235 27.54 90.213	RSS-132(4.3) RSS-133(6.3) RSS-139(6.3) RSS-199(4.3)	Frequency Stability	2.5PPM		Pass	see original
22.913(a)(2)	RSS-132(4.4)	Effective Radiated Power	38 dBm	Radiated	Pass	29.30dBm
27.50(b)(10)	N/A		34.77 dBm		Pass	21.09dBm
24.232(c) 27.50(h)(2)	RSS-133(6.4) RSS-199(4.4)	Equivalent Isotropic Radiated Power	33dBm		Pass	27.95dBm
27.50(d)(4)	RSS-139(6.4)		30dBm		Pass	26.31dBm
22.917(a) 24.238(a) 27.53(g)	RSS-132(4.5.1) RSS-133(6.5.1) RSS-139(6.5.1)	Radiated Spurious Emission	-13dBm		Pass	-33.1dBm
27.53(m)	RSS-199(4.5)		-25dBm		Pass	-38dBm

UL VERIFICATION SERVICES INC. FORM NO: CCSUP4701I
47173 BENICIA STREET, FREMONT, CA 94538, USA TEL: (510) 771-1000 FAX: (510) 661-0888

This report shall not be reproduced except in full, without the written approval of UL Verification Services Inc.

RF POWER OUTPUT VERIFICATION

7.1. GSM/GPRS/EDGE

Function: Menu select > GSM Mobile Station > GSM 850/900/1800/1900

Press Connection control to choose the different menus

Press RESET > choose all to reset all settings

Connection Press Signal Off to turn off the signal and change settings

Network Support > GSM+GPRS or GSM+EGPRS

Main Service > Packet Data

Service selection > Test Mode A – Auto Slot Config. off

MS Signal Press Slot Config bottom on the right twice to select and change the number of time slots and power setting

> Slot configuration > Uplink/Gamma

> 33 dBm for GPRS 850/900

> 30 dBm for GPRS1800/1900

BS Signal Enter the same channel number for TCH channel (test channel) and BCCH channel

Frequency Offset > + 0 Hz

Mode > BCCH and TCH

BCCH Level > -85 dBm (May need to adjust if link is not stable)

BCCH Channel > choose desire test channel [Enter the same channel number for TCH channel (test channel) and BCCH channel]

Channel Type > Off

P0> 4 dB

Slot Config > Unchanged (if already set under MS Signal)

TCH > choose desired test channel

Hopping > Off

Main Timeslot > 3 (Default)

Network Coding Scheme > CS4 (GPRS) and MCS5 ~ MCS9 (EGPRS)

Bit Stream > 2E9-1PSR Bit Pattern

AF/RF Enter appropriate offsets for Ext. Att. Output and Ext. Att. Input

Connection Press Signal On to turn on the signal and change settings

UL VERIFICATION SERVICES INC. FORM NO: CCSUP4701I
47173 BENICIA STREET, FREMONT, CA 94538, USA TEL: (510) 771-1000 FAX: (510) 661-0888

This report shall not be reproduced except in full, without the written approval of UL Verification Services Inc.

7.1.1. GSM OUTPUT POWER RESULT

Band	Mode	Ch.	f(MHz)	1 time slot	2 time slot
				Peak (dBm)	Peak (dBm)
GSM850	GMSK	128	824.2	32.9	
		190	836.6	32.8	
		251	848.8	33.1	
	GPRS	128	824.2	32.9	31.1
		190	836.6	32.8	31.0
		251	848.8	33.1	30.8
	EGPRS	128	824.2	26.7	24.4
		190	836.6	26.4	24.3
		251	848.8	26.4	24.2
GSM1900	GMSK	512	1850.2	30.7	
		661	1880	30.7	
		810	1909.8	30.7	
	GPRS	512	1850.2	30.7	28.0
		661	1880	30.7	28.1
		810	1909.8	30.7	28.1
	EGPRS	512	1850.2	26.2	23.7
		661	1880	26.1	23.7
		810	1909.8	26.1	23.7

UL VERIFICATION SERVICES INC. FORM NO: CCSUP4701I
47173 BENICIA STREET, FREMONT, CA 94538, USA TEL: (510) 771-1000 FAX: (510) 661-0888

This report shall not be reproduced except in full, without the written approval of UL Verification Services Inc.

7.2. UMTS REL 99

TEST PROCEDURE

The following summary of these settings are illustrated below:

	Mode	Rel99
	Subtest	-
WCDMA General Settings	Loopback Mode	Test Mode 1
	Rel99 RMC	12.2kbps RMC
	HSDPA FRC	Not Applicable
	HSUPA Test	Not Applicable
	Power Control Algorithm	Algorithm2
	βc	Not Applicable
	βd	Not Applicable
	βec	Not Applicable
	βc/βd	8/15
	βhs	Not Applicable
	βed	Not Applicable

7.2.1. UMTS REL 99 OUTPUT POWER RESULT

Band	Mode	Ch.	f(MHz)	Conducted Power (dBm) Avg (dBm)
Band 5	REL99	4132	826.4	24.7
		4183	836.6	24.7
		4233	846.6	24.7
Band 2	REL99	9262	1852.4	24.2
		9400	1880	24.2
		9538	1907.6	24.2

UL VERIFICATION SERVICES INC. FORM NO: CCSUP4701I
47173 BENICIA STREET, FREMONT, CA 94538, USA TEL: (510) 771-1000 FAX: (510) 661-0888

This report shall not be reproduced except in full, without the written approval of UL Verification Services Inc.

7.3. UMTS HSDPA

The following 4 Sub-tests were completed according to Release 5 procedures in section 5.2 of 3GPP TS34.121. A summary of these settings are illustrated below:

	Mode	Rel5 HSDPA			
	Subtest	1	2	3	4
WCDMA General Settings	Loopback Mode	Test Mode 1			
	Rel99 RMC	12.2kbps RMC			
	HSDPA FRC	H-Set1			
	Power Control Algorithm	Algorithm 2			
	βc	2/15	12/15	15/15	15/15
	βd	15/15	15/15	8/15	4/15
	Bd (SF)	64			
	βc/βd	2/15	12/15	15/8	15/4
	βhs	4/15	24/15	30/15	30/15
	MPR (dB)	0	0	0.5	0.5
HSDPA Specific Settings	D_{ACK}	8			
	D_{NAK}	8			
	DCQI	8			
	Ack-Nack repetition factor	3			
	CQI Feedback (Table 5.2B.4)	4ms			
	CQI Repetition Factor (Table 5.2B.4)	2			
	Ahs =βhs/βc	30/15			

7.3.1. UMTS HSDPA OUTPUT POWER RESULT

Band	Mode	Subset	Ch.	f(MHz)	Conducted Power (dBm) Avg (dBm)
Band 5	HSDPA	1	4132	826.4	24.7
			4183	836.6	24.6
			4233	846.6	24.6
		2	4132	826.4	24.7
			4183	836.6	24.6
			4233	846.6	24.7
		3	4132	826.4	24.2
			4183	836.6	24.2
			4233	846.6	24.2
		4	4132	826.4	24.2
			4183	836.6	24.2
			4233	846.6	24.2
Band 2	HSDPA	1	9262	1852.4	24.2

UL VERIFICATION SERVICES INC. FORM NO: CCSUP4701I
47173 BENICIA STREET, FREMONT, CA 94538, USA TEL: (510) 771-1000 FAX: (510) 661-0888

This report shall not be reproduced except in full, without the written approval of UL Verification Services Inc.

			9400	1880	24.2
			9538	1907.6	24.2
		2	9262	1852.4	24.2
			9400	1880	24.2
			9538	1907.6	24.2
		3	9262	1852.4	23.7
			9400	1880	23.7
			9538	1907.6	23.7
		4	9262	1852.4	23.7
			9400	1880	23.7
			9538	1907.6	23.7

UL VERIFICATION SERVICES INC. FORM NO: CCSUP4701I
47173 BENICIA STREET, FREMONT, CA 94538, USA TEL: (510) 771-1000 FAX: (510) 661-0888

This report shall not be reproduced except in full, without the written approval of UL Verification Services Inc.

7.3.2. UMTS HSUPA

TEST PROCEDURE

The following summary of these settings are illustrated below: (ETSI TS 134.121-1 Table C.11.1)

	Mode	Rel6 HSUPA	Rel6 HSUPA	Rel6 HSUPA	Rel6 HSUPA	Rel6 HSUPA
	Subtest	1	2	3	4	5
WCDMA General Settings	Loopback Mode	Test Mode 1				
	P-CPICH (dB)	-10				
	P-CCPCH (dB)	-12				
	SCH (dB)	-12				
	PICH(dB)	-15				
	DPCH (dB)	-9				
	HS-SCCH_1 (dB)	-8				
	HS-PDSCH (dB)	-3				
	Rel99 RMC	12.2kbps RMC				
	HSDPA FRC	H-Set1				
	HSUPA Test	HSUPA Loopback				
	Power Control Algorithm	Algorithm2				
	Bc	11/15	6/15	15/15	2/15	15/15
	Bd	15/15	15/15	9/15	15/15	15/15
	Bec	209/225	12/15	30/15	2/15	5/15
	βc/βd	11/15	6/15	15/9	2/15	15/15
	Bhs	22/15	12/15	30/15	4/15	30/15
	βed (note1)	1309/225	94/75	47/15 47/15	56/75	134/15
	MPR	0	2	1	2	0
HSDPA Specific Settings	DACK	8				
	DNAK	8				
	DCQI	8				
	Ack-Nack repetition factor	3				
	CQI Feedback (Table 5.2B.4)	4ms				
	CQI Repetition Factor (Table 5.2B.4)	2				
	Ahs = βhs/βc	30/15				
HSUPA Specific Settings	D E-DPCCH	6	8	8	5	7
	DHARQ	0	0	0	0	0
	AG Index	20	12	15	17	21
	Reference E-TFCIs	5	5	2	5	5
	ETFCI (from 34.121 Table C.11.1.3)	75	67	92	71	81
	Associated Max UL Data Rate kbps	242.1	174.9	482.8	205.8	308.9
	Reference E_TFCIs	E-TFCI 11 E-TFCI PO 4 E-TFCI 67 E-TFCI PO 18 E-TFCI 71 E-TFCI PO 23 E-TFCI 75 E-TFCI PO 26 E-TFCI 81 E-TFCI PO 27		E-TFCI 11 E-TFCI PO 4 E-TFCI 92 E-TFCI PO 18	E-TFCI 11 E-TFCI PO 4 E-TFCI 67 E-TFCI PO 18 E-TFCI 71 E-TFCI PO 23 E-TFCI 75 E-TFCI PO 26 E-TFCI 81 E-TFCI PO 27	

Note1: βed cannot be set directly, it is set by Absolute Grant Value.

This report shall not be reproduced except in full, without the written approval of UL Verification Services Inc.

7.3.3. UMTS HSUPA OUTPUT POWER RESULT

Band	Mode	Subset	Ch.	f(MHz)	Conducted Power (dBm) Avg (dBm)
Band 5	HSUPA	1	4132	826.4	24.0
			4183	836.6	24.3
			4233	846.6	24.3
		2	4132	826.4	22.7
			4183	836.6	22.7
			4233	846.6	22.7
		3	4132	826.4	23.4
			4183	836.6	23.2
			4233	846.6	23.5
		4	4132	826.4	22.7
			4183	836.6	22.7
			4233	846.6	22.7
		5	4132	826.4	24.6
			4183	836.6	24.6
			4233	846.6	24.6
Band 2	HSUPA	1	9262	1852.4	24.1
			9400	1880	23.8
			9538	1907.6	24.1
		2	9262	1852.4	22.2
			9400	1880	22.2
			9538	1907.6	22.2
		3	9262	1852.4	23.2
			9400	1880	23.2
			9538	1907.6	23.2
		4	9262	1852.4	22.2
			9400	1880	22.2
			9538	1907.6	22.2
		5	9262	1852.4	24.2
			9400	1880	24.2
			9538	1907.6	24.2

UL VERIFICATION SERVICES INC. FORM NO: CCSUP4701I
47173 BENICIA STREET, FREMONT, CA 94538, USA TEL: (510) 771-1000 FAX: (510) 661-0888

This report shall not be reproduced except in full, without the written approval of UL Verification Services Inc.

7.4. LTE OUTPUT VERIFICATION

7.4.1. LTE OUTPUT RESULT

Band	BW (MHz)	Mode	RB Allocation	RB offset	Target MPR	Avg Pwr (dBm)		
						18650	18900	19150
						1855 MHz	1880 MHz	1905 MHz
LTE Band 2	10	QPSK	1	0	0	24.58	24.70	**24.67**
			1	25	0	**24.48**	24.70	24.68
			1	49	0	24.62	**24.70**	24.59
			25	0	1	**23.70**	23.70	23.70
			25	12	1	23.70	23.70	23.69
			25	25	1	23.70	**23.70**	**23.69**
			50	0	1	23.70	**23.70**	23.70
		16QAM	1	0	1	23.55	23.70	23.65
			1	25	1	23.44	23.70	23.59
			1	49	1	23.58	23.70	23.50
			25	0	2	22.70	22.70	22.70
			25	12	2	22.70	22.70	22.70
			25	25	2	22.70	22.70	22.70
			50	0	2	22.70	22.70	22.70

Band	BW (MHz)	Mode	RB Allocation	RB offset	Target MPR	Avg Pwr (dBm)		
						18625	18900	19175
						1852.5 MHz	1880 MHz	1907.5 MHz
LTE Band 2	5	QPSK	1	0	0	24.58	24.70	24.63
			1	12	0	24.60	24.70	24.58
			1	24	0	24.55	24.70	24.56
			12	0	1	23.70	23.70	23.70
			12	6	1	23.70	23.70	23.70
			12	13	1	23.70	23.70	23.70
			25	0	1	23.70	23.70	23.70
		16QAM	1	0	1	23.70	23.70	23.70
			1	12	1	23.70	23.70	23.70
			1	24	1	23.70	23.70	23.70
			12	0	2	22.70	22.70	22.70
			12	6	2	22.70	22.70	22.70
			12	13	2	22.70	22.70	22.70
			25	0	2	22.70	22.70	22.70

UL VERIFICATION SERVICES INC. FORM NO: CCSUP4701I
47173 BENICIA STREET, FREMONT, CA 94538, USA TEL: (510) 771-1000 FAX: (510) 661-0888

This report shall not be reproduced except in full, without the written approval of UL Verification Services Inc.

Band	BW (MHz)	Mode	RB Allocation	RB offset	Target MPR	Avg Pwr (dBm)		
						20000	20175	20350
						1715 MHz	1732.5 MHz	1750 MHz
LTE Band 4	10	QPSK	1	0	0	**24.40**	**24.53**	24.45
			1	25	0	24.30	24.54	**24.46**
			1	49	0	24.23	24.55	24.50
			25	0	1	23.50	**23.56**	23.59
			25	12	1	23.52	23.60	**23.60**
			25	25	1	**23.40**	23.56	23.62
			50	0	1	**23.61**	23.68	23.68
		16QAM	1	0	1	23.36	23.70	23.37
			1	25	1	23.24	23.70	23.38
			1	49	1	23.17	23.70	23.41
			25	0	2	22.47	22.65	22.63
			25	12	2	22.48	22.68	22.64
			25	25	2	22.43	22.61	22.67
			50	0	2	22.59	22.70	22.70

Band	BW (MHz)	Mode	RB Allocation	RB offset	Target MPR	Avg Pwr (dBm)		
						19975	20175	20375
						1712.5 MHz	1732.5 MHz	1752.5 MHz
LTE Band 4	5	QPSK	1	0	0	24.42	24.67	24.52
			1	12	0	24.31	24.68	24.54
			1	24	0	24.33	24.62	24.62
			12	0	1	23.54	23.60	23.61
			12	6	1	23.44	23.58	23.59
			12	13	1	23.45	23.63	23.63
			25	0	1	23.45	23.57	23.63
		16QAM	1	0	1	23.36	23.56	23.39
			1	12	1	23.21	23.58	23.41
			1	24	1	23.28	23.51	23.47
			12	0	2	22.66	22.66	22.70
			12	6	2	22.54	22.70	22.70
			12	13	2	22.54	22.70	22.70
			25	0	2	22.60	22.64	22.70

UL VERIFICATION SERVICES INC. FORM NO: CCSUP4701I
47173 BENICIA STREET, FREMONT, CA 94538, USA TEL: (510) 771-1000 FAX: (510) 661-0888

This report shall not be reproduced except in full, without the written approval of UL Verification Services Inc.

Band	BW (MHz)	Mode	RB Allocation	RB offset	Target MPR	Avg Pwr (dBm)		
						20450	20525	20600
						829 MHz	836.5 MHz	844 MHz
LTE Band 5	10	QPSK	1	0	0	**24.66**	24.60	24.61
			1	25	0	24.47	24.45	24.58
			1	49	0	24.47	**24.59**	**24.62**
			25	0	1	**23.60**	23.58	23.70
			25	12	1	23.53	**23.59**	23.70
			25	25	1	23.59	23.60	**23.70**
			50	0	1	23.64	23.57	**23.70**
		16QAM	1	0	1	23.59	23.44	23.54
			1	25	1	23.38	23.31	23.52
			1	49	1	23.36	23.46	23.55
			25	0	2	22.59	22.64	22.70
			25	12	2	22.61	22.65	22.70
			25	25	2	22.60	22.67	22.70
			50	0	2	22.62	22.58	22.69

Band	BW (MHz)	Mode	RB Allocation	RB offset	Target MPR	Avg Pwr (dBm)		
						20425	20525	20625
						826.5 MHz	836.5 MHz	846.5 MHz
LTE Band 5	5	QPSK	1	0	0	24.65	24.60	24.62
			1	12	0	24.50	24.58	24.62
			1	24	0	24.50	24.70	24.69
			12	0	1	23.58	23.53	23.70
			12	6	1	23.56	23.55	23.70
			12	13	1	23.53	23.49	23.65
			25	0	1	23.63	23.56	23.70
		16QAM	1	0	1	23.47	23.52	23.47
			1	12	1	23.33	23.48	23.44
			1	24	1	23.36	23.59	23.48
			12	0	2	22.65	22.57	22.70
			12	6	2	22.62	22.59	22.70
			12	13	2	22.64	22.59	22.70
			25	0	2	22.70	22.51	22.70

UL VERIFICATION SERVICES INC. FORM NO: CCSUP4701I
47173 BENICIA STREET, FREMONT, CA 94538, USA TEL: (510) 771-1000 FAX: (510) 661-0888

This report shall not be reproduced except in full, without the written approval of UL Verification Services Inc.

UL VERIFICATION SERVICES INC. FORM NO: CCSUP4701I
47173 BENICIA STREET, FREMONT, CA 94538, USA TEL: (510) 771-1000 FAX: (510) 661-0888

This report shall not be reproduced except in full, without the written approval of UL Verification Services Inc.

Band	BW (MHz)	Mode	RB Allocation	RB offset	Target MPR	Meas. MPR	Avg Pwr (dBm)		
							2510 MHz	2535 MHz	2560 MHz
LTE Band 7	20	QPSK	1	0	0	0	23.7	24.1	24.0
			1	49	0	0	23.7	24.0	24.0
			1	99	0	0	23.9	24.1	23.7
			50	0	1	1	22.7	23.0	23.0
			50	24	1	1	22.7	23.0	22.9
			50	50	1	1	22.7	22.9	22.8
			100	0	1	1	22.7	22.9	22.9
		16QAM	1	0	1	1	22.8	23.1	23.1
			1	49	1	1	22.8	23.0	23.0
			1	99	1	1	23.0	23.0	22.8
			50	0	2	2	21.8	22.1	22.0
			50	24	2	2	21.7	22.0	22.0
			50	50	2	2	21.8	22.1	21.9
			100	0	2	2	21.8	22.0	22.0
Band	BW (MHz)	Mode	RB Allocation	RB offset	Target MPR	Meas. MPR	Avg Pwr (dBm)		
							2507.5 MHz	2535 MHz	2562.5 MHz
LTE Band 7	15	QPSK	1	0	0	0	23.8	24.1	24.1
			1	37	0	0	23.6	24.0	24.0
			1	74	0	0	23.9	24.1	23.8
			36	0	1	1	22.7	23.0	23.0
			36	20	1	1	22.7	23.0	23.0
			36	39	1	1	22.8	23.0	22.9
			75	0	1	1	22.7	23.0	23.0
		16QAM	1	0	1	1	22.6	22.8	22.8
			1	37	1	1	22.5	22.8	22.8
			1	74	1	1	22.6	22.9	22.6
			36	0	2	2	21.8	22.1	22.0
			36	20	2	2	21.7	22.0	22.0
			36	39	2	2	21.7	22.0	21.9
			75	0	2	2	21.7	22.0	22.0
Band	BW (MHz)	Mode	RB Allocation	RB offset	Target MPR	Meas. MPR	Avg Pwr (dBm)		
							2505 MHz	2535 MHz	2565 MHz
LTE Band 7	10	QPSK	1	0	0	0	23.8	24.2	24.0
			1	25	0	0	23.7	24.1	23.9
			1	49	0	0	23.7	24.2	23.7
			25	0	1	0	22.7	23.1	22.9
			25	12	1	0	22.7	23.0	22.9
			25	25	1	0	22.7	23.0	22.8
			50	0	1	0	22.7	23.0	22.9
		16QAM	1	0	1	0	22.7	22.9	22.8
			1	25	1	0	22.6	22.8	22.7
			1	49	1	0	22.5	22.9	22.5
			25	0	2	0	21.8	22.2	22.0
			25	12	2	0	21.8	22.0	21.9
			25	25	2	0	21.7	22.1	21.8
			50	0	2	0	21.8	22.1	21.9

UL VERIFICATION SERVICES INC. FORM NO: CCSUP4701I
47173 BENICIA STREET, FREMONT, CA 94538, USA TEL: (510) 771-1000 FAX: (510) 661-0888

This report shall not be reproduced except in full, without the written approval of UL Verification Services Inc.

Band	BW (MHz)	Mode	RB Allocation	RB offset	Target MPR	Meas. MPR	Avg Pwr (dBm)		
							2502.5 MHz	2535 MHz	2567.5 MHz
LTE Band 7	5	QPSK	1	0	0	0	23.8	24.2	24.0
			1	12	0	0	23.7	24.1	23.9
			1	24	0	0	23.8	24.2	23.8
			12	0	1	1	22.8	23.0	22.9
			12	6	1	1	22.8	23.0	22.9
			12	13	1	1	22.8	23.0	22.9
			25	0	1	1	22.7	23.0	22.9
		16QAM	1	0	1	1	22.6	22.8	22.7
			1	12	1	1	22.4	22.7	22.6
			1	24	1	1	22.6	22.8	22.6
			12	0	2	2	21.8	22.0	21.9
			12	6	2	2	21.8	22.1	22.0
			12	13	2	2	21.8	22.1	21.9
			25	0	2	2	21.8	22.2	21.9

UL VERIFICATION SERVICES INC. FORM NO: CCSUP4701I
47173 BENICIA STREET, FREMONT, CA 94538, USA TEL: (510) 771-1000 FAX: (510) 661-0888

This report shall not be reproduced except in full, without the written approval of UL Verification Services Inc.

Band	BW (MHz)	Mode	RB Allocation	RB offset	Target MPR	Avg Pwr (dBm) 23790 710 MHz
LTE Band 17	10	QPSK	1	0	0	**24.54**
			1	25	0	24.56
			1	49	0	24.53
			25	0	1	23.62
			25	12	1	**23.66**
			25	25	1	23.70
			50	0	1	**23.70**
		16QAM	1	0	1	23.55
			1	25	1	23.54
			1	49	1	23.45
			25	0	2	22.65
			25	12	2	22.70
			25	25	2	22.64
			50	0	2	22.70

Band	BW (MHz)	Mode	RB Allocation	RB offset	Target MPR	Avg Pwr (dBm) 23790 710 MHz
LTE Band 17	5	QPSK	1	0	0	24.70
			1	12	0	24.62
			1	24	0	24.69
			12	0	1	23.70
			12	7	1	23.65
			12	13	1	23.67
			25	0	1	23.66
		16QAM	1	0	1	23.66
			1	12	1	23.61
			1	24	1	23.65
			12	0	2	22.70
			12	7	2	22.68
			12	13	2	22.68
			25	0	2	22.67

UL VERIFICATION SERVICES INC. FORM NO: CCSUP4701I
47173 BENICIA STREET, FREMONT, CA 94538, USA TEL: (510) 771-1000 FAX: (510) 661-0888

This report shall not be reproduced except in full, without the written approval of UL Verification Services Inc.

8. RADIATED TEST RESULTS

8.1. RADIATED POWER (ERP & EIRP)

RULE PART(S)

FCC: §2.1046, §22.913, §24.232, and § 27

LIMITS

22.913(a) - The ERP of mobile transmitters and auxiliary test transmitters must not exceed 7 Watts.

24.232(c) - Mobile/portable stations are limited to 2 watts e.i.r.p. peak power and the equipment must employ means to limit the power to the minimum necessary for successful communications.

TEST RESULTS

UL VERIFICATION SERVICES INC. FORM NO: CCSUP4701I
47173 BENICIA STREET, FREMONT, CA 94538, USA TEL: (510) 771-1000 FAX: (510) 661-0888

This report shall not be reproduced except in full, without the written approval of UL Verification Services Inc.

8.1.1. ERP/EIRP Results

Band	Mode	Channel	f(MHz)	ERP / EIRP	
				dBm	mW
Band 2	REL99	9262	1852.4	22.65	184.07
		9400	1880	22.58	181.13
		9538	1907.6	22.23	167.10
	HSDPA	9262	1852.4	22.35	171.79
		9400	1880	22.67	184.92
		9538	1907.6	22.23	167.10

Band	Mode	Channel	f(MHz)	ERP / EIRP	
				dBm	mW
Band 5	REL99	4132	826.4	20.65	116.14
		4183	836.6	21.56	143.21
		4233	846.6	20.99	125.60
	HSDPA	4132	826.4	20.46	111.17
		4183	836.6	20.98	125.31
		4233	846.6	20.84	121.33

Band	Mode	Channel	f(MHz)	ERP / EIRP	
				dBm	mW
GSM1900	GPRS	512	1850.2	27.64	580.76
		661	1880	27.95	623.73
		810	1909.8	25.19	330.36
	EGPRS	512	1850.2	25.59	362.24
		661	1880	26.10	407.38
		810	1909.8	23.50	223.87

UL VERIFICATION SERVICES INC. FORM NO: CCSUP4701I
47173 BENICIA STREET, FREMONT, CA 94538, USA TEL: (510) 771-1000 FAX: (510) 661-0888

This report shall not be reproduced except in full, without the written approval of UL Verification Services Inc.

Band	Mode	Channel	f(MHz)	ERP / EIRP	
				dBm	mW
GSM850	GPRS	128	824.2	28.94	783.42
		190	836.6	29.30	851.13
		251	848.8	29.13	818.46
	EGPRS	128	824.2	26.35	431.51
		190	836.6	27.07	509.33
		251	848.8	27.39	548.27

UL VERIFICATION SERVICES INC. FORM NO: CCSUP4701I
47173 BENICIA STREET, FREMONT, CA 94538, USA TEL: (510) 771-1000 FAX: (510) 661-0888

This report shall not be reproduced except in full, without the written approval of UL Verification Services Inc.

8.1.2. LTE ERP/EIRP Results

Band	BW (MHz)	Mode	RB/RB Size	f (MHz)	ERP / EIRP	
					dBm	mW
LTE17	10	QPSK	1/0	709	20.54	113.24
			1/0	710	21.09	128.52
			1/0	711	20.82	120.78
		16QAM	1/0	709	19.83	96.16
			1/0	710	19.94	98.62
			1/0	711	19.80	95.49

Band	BW (MHz)	Mode	RB/RB Size	f (MHz)	ERP / EIRP	
					dBm	mW
LTE17	5	QPSK	1/0	706.5	20.20	104.71
			1/0	710	20.60	114.81
			1/0	713.5	20.60	114.81
		16QAM	1/0	706.5	19.10	81.28
			1/0	710	19.80	95.49
			1/0	713.5	19.60	91.20

Band	BW (MHz)	Mode	RB/RB Size	f (MHz)	ERP / EIRP	
					dBm	mW
LTE7	20	QPSK	1/0	2510	16.36	43.25
			1/0	2535	18.81	76.03
			1/0	2560	20.78	119.67
		16QAM	1/0	2510	19.38	86.69
			1/0	2535	19.30	85.11
			1/0	2560	20.01	100.23

UL VERIFICATION SERVICES INC. FORM NO: CCSUP4701I
47173 BENICIA STREET, FREMONT, CA 94538, USA TEL: (510) 771-1000 FAX: (510) 661-0888

This report shall not be reproduced except in full, without the written approval of UL Verification Services Inc.

Band	BW (MHz)	Mode	RB/RB Size	f (MHz)	ERP / EIRP	
					dBm	mW
LTE7	15	QPSK	1/0	2507.5	20.53	112.97
			1/0	2535	19.48	88.71
			1/0	2562.5	19.51	89.33
		16QAM	1/0	2507.5	17.40	54.95
			1/0	2535	19.90	97.72
			1/0	2562.5	18.80	75.85

Band	BW (MHz)	Mode	RB/RB Size	f (MHz)	ERP / EIRP	
					dBm	mW
LTE7	10	QPSK	1/0	2505	20.10	102.32
			1/0	2535	20.86	121.89
			1/0	2565	18.91	77.80
		16QAM	1/0	2505	19.30	85.11
			1/0	2535	19.61	91.41
			1/0	2565	17.69	58.74

Band	BW (MHz)	Mode	RB/RB Size	f (MHz)	ERP / EIRP	
					dBm	mW
LTE7	5	QPSK	1/0	2502.5	19.71	93.54
			1/0	2535	20.12	102.80
			1/0	2567.5	20.75	118.85
		16QAM	1/0	2502.5	19.08	80.90
			1/0	2535	19.37	86.49
			1/0	2567.5	19.51	89.33

UL VERIFICATION SERVICES INC. FORM NO: CCSUP4701I
47173 BENICIA STREET, FREMONT, CA 94538, USA TEL: (510) 771-1000 FAX: (510) 661-0888

This report shall not be reproduced except in full, without the written approval of UL Verification Services Inc.

Band	BW (MHz)	Mode	RB/RB Size	f (MHz)	ERP / EIRP	
					dBm	mW
LTE5	10	QPSK	1/0	829	21.88	154.17
			1/0	836.5	21.05	127.35
			1/0	844	20.02	100.46
		16QAM	1/0	829	21.50	141.25
			1/0	836.5	20.75	118.85
			1/0	844	21.11	129.12

Band	BW (MHz)	Mode	RB/RB Size	f (MHz)	ERP / EIRP	
					dBm	mW
LTE5	5	QPSK	1/0	826.5	18.69	73.96
			1/0	836.5	18.53	71.28
			1/0	846.5	20.62	115.34
		16QAM	1/0	826.5	18.31	67.76
			1/0	836.5	17.74	59.42
			1/0	846.5	19.82	95.94

Band	BW (MHz)	Mode	RB/RB Size	f (MHz)	ERP / EIRP	
					dBm	mW
LTE4	10	QPSK	1/0	1715	23.80	239.88
			1/0	1732.5	24.80	301.99
			1/0	1750	25.63	365.59
		16QAM	1/0	1715	22.73	187.49
			1/0	1732.5	23.69	233.88
			1/0	1750	24.52	283.13

UL VERIFICATION SERVICES INC. FORM NO: CCSUP4701I
47173 BENICIA STREET, FREMONT, CA 94538, USA TEL: (510) 771-1000 FAX: (510) 661-0888

This report shall not be reproduced except in full, without the written approval of UL Verification Services Inc.

Band	BW (MHz)	Mode	RB/RB Size	f (MHz)	ERP / EIRP	
					dBm	mW
LTE4	5	QPSK	1/0	1712.5	24.62	289.73
			1/0	1732.5	26.13	410.20
			1/0	1752.5	26.31	427.56
		16QAM	1/0	1712.5	24.12	258.22
			1/0	1732.5	25.95	393.55
			1/0	1752.5	25.20	331.13

Band	BW (MHz)	Mode	RB/RB Size	f (MHz)	ERP / EIRP	
					dBm	mW
LTE2	10	QPSK	1/0	1855	24.65	291.74
			1/0	1880	24.45	278.61
			1/0	1905	23.35	216.27
		16QAM	1/0	1855	23.75	237.13
			1/0	1880	23.65	231.73
			1/0	1905	22.25	167.88

Band	BW (MHz)	Mode	RB/RB Size	f (MHz)	ERP / EIRP	
					dBm	mW
LTE2	5	QPSK	1/0	1852.5	24.45	278.61
			1/0	1880	24.15	260.01
			1/0	1907.5	22.45	175.79
		16QAM	1/0	1852.5	23.45	221.30
			1/0	1880	23.15	206.53
			1/0	1907.5	21.25	133.35

UL VERIFICATION SERVICES INC. FORM NO: CCSUP4701I
47173 BENICIA STREET, FREMONT, CA 94538, USA TEL: (510) 771-1000 FAX: (510) 661-0888

This report shall not be reproduced except in full, without the written approval of UL Verification Services Inc.

8.1.3. ERP/EIRP DATA

Band

LTE17

5MHz

16QAM

High Frequency Substitution Measurement
UL Verification Services, Inc. Chamber C

Company: LG
Project #: 14U18112
Date: 06/26/15
Test Engineer: Bob Liu
Configuration: EUT only
Mode: LTE Band 17_5MHz_16QAM

Test Equipment:
Receiving: Sunol T407, and 3m Chamber N-type Cable (Setup this one for testing EUT)
Substitution: Dipole S/N: 00022117, 4ft SMA Cable (SN # 245200 001) Warehouse.

f MHz	SG reading (dBm)	Ant. Pol. (H/V)	Cable Loss (dB)	Antenna Gain (dBd)	ERP (dBm)	Limit (dBm)	Margin (dB)	Notes
Low Ch								
706.50	7.90	V	0.9	0.0	7.00	38.5	-31.4	
706.50	20.00	H	0.9	0.0	19.10	38.5	-19.3	
Mid Ch								
710.00	9.20	V	0.9	0.0	8.30	38.5	-30.1	
710.00	20.70	H	0.9	0.0	19.80	38.5	-18.6	
High Ch								
713.50	9.30	V	0.9	0.0	8.40	38.5	-30.0	
713.50	20.50	H	0.9	0.0	19.60	38.5	-18.8	

Rev. 3.17.11
Note: For Band 13/17 ERP limit is 34.77dBm; For Band 26 limit is 50dBm

UL VERIFICATION SERVICES INC. FORM NO: CCSUP4701I
47173 BENICIA STREET, FREMONT, CA 94538, USA TEL: (510) 771-1000 FAX: (510) 661-0888

This report shall not be reproduced except in full, without the written approval of UL Verification Services Inc.

Band

LTE17

5MHz

QPSK

High Frequency Substitution Measurement
UL Verification Services, Inc. Chamber C

Company: LG
Project #: 14U18112
Date: 06/26/15
Test Engineer: Bob Liu
Configuration: EUT only
Mode: LTE Band 17_5MHz_QPSK

Test Equipment:
Receiving: Sunol T407, and 3m Chamber N-type Cable (Setup this one for testing EUT)
Substitution: Dipole S/N: 00022117, 4ft SMA Cable (SN # 245200 001) Warehouse.

f MHz	SG reading (dBm)	Ant. Pol. (H/V)	Cable Loss (dB)	Antenna Gain (dBd)	ERP (dBm)	Limit (dBm)	Margin (dB)	Notes
Low Ch								
706.50	9.00	V	0.9	0.0	8.10	38.5	-30.3	
706.50	21.10	H	0.9	0.0	20.20	38.5	-18.2	
Mid Ch								
710.00	10.10	V	0.9	0.0	9.20	38.5	-29.2	
710.00	21.50	H	0.9	0.0	20.60	38.5	-17.8	
High Ch								
713.50	10.40	V	0.9	0.0	9.50	38.5	-28.9	
713.50	21.50	H	0.9	0.0	20.60	38.5	-17.8	

Rev. 3.17.11
Note: For Band 13/17 ERP limit is 34.77dBm; For Band 26 limit is 50dBm

UL VERIFICATION SERVICES INC. FORM NO: CCSUP4701I
47173 BENICIA STREET, FREMONT, CA 94538, USA TEL: (510) 771-1000 FAX: (510) 661-0888

This report shall not be reproduced except in full, without the written approval of UL Verification Services Inc.

Band

LTE17

10MHz

16QAM

High Frequency Substitution Measurement
UL Verification Services, Inc. Chamber C

Company: LG
Project #: 14U18112
Date: 06/26/15
Test Engineer: Bob Liu
Configuration: EUT only
Mode: LTE Band 17_10MHz_16QAM

Test Equipment:
Receiving: Sunol T407, and 3m Chamber N-type Cable (Setup this one for testing EUT)
Substitution: Dipole S/N: 00022117, 4ft SMA Cable (SN # 245200 001) Warehouse.

f MHz	SG reading (dBm)	Ant. Pol. (H/V)	Cable Loss (dB)	Antenna Gain (dBd)	ERP (dBm)	Limit (dBm)	Margin (dB)	Notes
Low Ch								
709.00	9.60	V	0.9	0.0	8.70	38.5	-29.7	
709.00	20.73	H	0.9	0.0	19.83	38.5	-18.6	
Mid Ch								
710.00	9.70	V	0.9	0.0	8.80	38.5	-29.6	
710.00	20.84	H	0.9	0.0	19.94	38.5	-18.5	
High Ch								
711.00	9.50	V	0.9	0.0	8.60	38.5	-29.8	
711.00	20.70	H	0.9	0.0	19.80	38.5	-18.6	

Rev. 3.17.11
Note: For Band 13/17 ERP limit is 34.77dBm; For Band 26 limit is 50dBm

UL VERIFICATION SERVICES INC. FORM NO: CCSUP4701I
47173 BENICIA STREET, FREMONT, CA 94538, USA TEL: (510) 771-1000 FAX: (510) 661-0888

This report shall not be reproduced except in full, without the written approval of UL Verification Services Inc.

Band

LTE17

10MHz

QPSK

High Frequency Substitution Measurement
UL Verification Services, Inc. Chamber C

Company: LG
Project #: 14U18112
Date: 06/26/15
Test Engineer: Bob Liu
Configuration: EUT only
Mode: LTE Band 17_10MHz_QPSK

Test Equipment:
Receiving: Sunol T407, and 3m Chamber N-type Cable (Setup this one for testing EUT)
Substitution: Dipole S/N: 00022117, 4ft SMA Cable (SN # 245200 001) Warehouse.

f MHz	SG reading (dBm)	Ant. Pol. (H/V)	Cable Loss (dB)	Antenna Gain (dBd)	ERP (dBm)	Limit (dBm)	Margin (dB)	Notes
Low Ch								
709.00	10.50	V	0.9	0.0	9.60	38.5	-28.8	
709.00	21.44	H	0.9	0.0	20.54	38.5	-17.9	
Mid Ch								
710.00	10.40	V	0.9	0.0	9.50	38.5	-28.9	
710.00	21.99	H	0.9	0.0	21.09	38.5	-17.4	
High Ch								
711.00	10.50	V	0.9	0.0	9.60	38.5	-28.8	
711.00	21.72	H	0.9	0.0	20.82	38.5	-17.6	

Rev. 3.17.11
Note: For Band 13/17 ERP limit is 34.77dBm; For Band 26 limit is 50dBm

UL VERIFICATION SERVICES INC. FORM NO: CCSUP4701I
47173 BENICIA STREET, FREMONT, CA 94538, USA TEL: (510) 771-1000 FAX: (510) 661-0888

This report shall not be reproduced except in full, without the written approval of UL Verification Services Inc.

Band

LTE7

20MHz

16QAM

High Frequency Substitution Measurement
Compliance Certification Services Chamber C

Company: LG
Project #: 14U18112
Date: 06/27/14
Test Engineer: Steven Her
Configuration: EUT only, X-position
Mode: LTE B7 20M 16QAM

Test Equipment:
Receiving: Sunol T119, and 3m Chamber N-type Cable (Setup this one for testing EUT)
Substitution: Horn T72 3115, 4ft SMA Cable (SN # 244640 002)

f MHz	SG reading (dBm)	Ant. Pol. (H/V)	Cable Loss (dB)	Antenna Gain (dBd)	ERP (dBm)	Limit (dBm)	Margin (dB)	Notes
Low Ch								
2510.00	6.93	V	0.9	9.5	15.50	38.5	-23.0	
2510.00	10.81	H	0.9	9.5	19.38	38.5	-19.1	
Mid Ch								
2535.00	4.28	V	0.9	9.5	12.88	38.5	-25.6	
2535.00	10.70	H	0.9	9.5	19.30	38.5	-19.2	
High Ch								
2560.00	4.77	V	0.9	9.7	13.57	38.5	-24.9	
2560.00	11.21	H	0.9	9.7	20.01	38.5	-18.4	

Rev. 3.17.11

UL VERIFICATION SERVICES INC. FORM NO: CCSUP4701I
47173 BENICIA STREET, FREMONT, CA 94538, USA TEL: (510) 771-1000 FAX: (510) 661-0888

This report shall not be reproduced except in full, without the written approval of UL Verification Services Inc.

Band

LTE7

20MHz

QPSK

High Frequency Substitution Measurement
Compliance Certification Services Chamber C

Company: LG
Project #: 14U18112
Date: 06/27/14
Test Engineer: Steven Her
Configuration: EUT only, X-position
Mode: LTE B7 20M QPSK

Test Equipment:
Receiving: Sunol T119, and 3m Chamber N-type Cable (Setup this one for testing EUT)
Substitution: Horn T72 3115, 4ft SMA Cable (SN # 244640 002)

f MHz	SG reading (dBm)	Ant. Pol. (H/V)	Cable Loss (dB)	Antenna Gain (dBd)	ERP (dBm)	Limit (dBm)	Margin (dB)	Notes
Low Ch								
2510.00	4.96	V	0.9	9.5	13.53	38.5	-24.9	
2510.00	7.79	H	0.9	9.5	16.36	38.5	-22.1	
Mid Ch								
2535.00	10.00	V	0.9	9.5	18.60	38.5	-19.9	
2535.00	10.21	H	0.9	9.5	18.81	38.5	-19.6	
High Ch								
2560.00	4.10	V	0.9	9.7	12.90	38.5	-25.6	
2560.00	11.98	H	0.9	9.7	20.78	38.5	-17.7	

Rev. 3.17.11

UL VERIFICATION SERVICES INC. FORM NO: CCSUP4701I
47173 BENICIA STREET, FREMONT, CA 94538, USA TEL: (510) 771-1000 FAX: (510) 661-0888

This report shall not be reproduced except in full, without the written approval of UL Verification Services Inc.

Band

LTE7

15MHz

16QAM

High Frequency Substitution Measurement
UL Verification Services, Inc. Chamber C

Company: LG
Project #: 14U18112
Date: 06/27/14
Test Engineer: Steven Her
Configuration: EUT only, X-position
Mode: LTE B7 15M 16QAM

Test Equipment:
Receiving: Horn T119, and Chamber C SMA Cables
Substitution: Horn T72 Substitution, 4ft SMA Cable Warehouse

f MHz	SG reading (dBm)	Ant. Pol. (H/V)	Cable Loss (dB)	Antenna Gain (dBd)	EIRP (dBm)	Limit (dBm)	Margin (dB)	Notes
Low Ch								
2507.50	5.90	V	0.9	9.5	14.50	33.0	-18.5	
2507.50	8.80	H	0.9	9.5	17.40	33.0	-15.6	
Mid Ch								
2535.00	5.90	V	0.9	9.5	14.50	33.0	-18.5	
2535.00	11.30	H	0.9	9.5	19.90	33.0	-13.1	
High Ch								
2562.50	10.50	V	0.9	9.6	19.20	33.0	-13.8	
2562.50	10.10	H	0.9	9.6	18.80	33.0	-14.2	

Rev. 3.17.11
Note: For Band 4 EIRP limit is 30dBm

UL VERIFICATION SERVICES INC. FORM NO: CCSUP4701I
47173 BENICIA STREET, FREMONT, CA 94538, USA TEL: (510) 771-1000 FAX: (510) 661-0888

This report shall not be reproduced except in full, without the written approval of UL Verification Services Inc.

Band

LTE7

15MHz

QPSK

High Frequency Substitution Measurement
UL Verification Services, Inc. Chamber C

Company: LG
Project #: 14U18112
Date: 06/27/14
Test Engineer: Steven Her
Configuration: EUT only, X-position
Mode: LTE B7 15M QPSK

Test Equipment:
Receiving: Horn T119, and Chamber C SMA Cables
Substitution: Horn T72 Substitution, 4ft SMA Cable Warehouse

f MHz	SG reading (dBm)	Ant. Pol. (H/V)	Cable Loss (dB)	Antenna Gain (dBd)	EIRP (dBm)	Limit (dBm)	Margin (dB)	Notes
Low Ch								
2507.50	6.25	V	0.9	9.5	14.85	33.0	-18.2	
2507.50	11.93	H	0.9	9.5	20.53	33.0	-12.5	
Mid Ch								
2535.00	6.10	V	0.9	9.5	14.70	33.0	-18.3	
2535.00	10.88	H	0.9	9.5	19.48	33.0	-13.5	
High Ch								
2562.50	10.72	V	0.9	9.6	19.42	33.0	-13.6	
2562.50	10.81	H	0.9	9.6	19.51	33.0	-13.5	

Rev. 3.17.11
Note: For Band 4 EIRP limit is 30dBm

UL VERIFICATION SERVICES INC. FORM NO: CCSUP4701I
47173 BENICIA STREET, FREMONT, CA 94538, USA TEL: (510) 771-1000 FAX: (510) 661-0888

This report shall not be reproduced except in full, without the written approval of UL Verification Services Inc.

Band

LTE7

10MHz

16QAM

High Frequency Substitution Measurement
UL Verification Services, Inc. Chamber C

Company: LG
Project #: 14U18112
Date: 06/26/14
Test Engineer: D. Sblendorio
Configuration: EUT
Mode: LTE7, 10MHz, 16QAM

Test Equipment:
Receiving: Horn T119, and Chamber C SMA Cables
Substitution: Horn T72 Substitution, 4ft SMA Cable Warehouse

f MHz	SG reading (dBm)	Ant. Pol. (H/V)	Cable Loss (dB)	Antenna Gain (dBd)	EIRP (dBm)	Limit (dBm)	Margin (dB)	Notes
Low Ch								
2505.00	7.35	V	0.9	9.5	15.97	33.0	-17.0	
2505.00	10.68	H	0.9	9.5	19.30	33.0	-13.7	
Mid Ch								
2535.00	8.90	V	0.9	9.5	17.52	33.0	-15.5	
2535.00	10.99	H	0.9	9.5	19.61	33.0	-13.4	
High Ch								
2565.00	8.45	V	0.9	9.5	17.10	33.0	-15.9	
2565.00	9.04	H	0.9	9.5	17.69	33.0	-15.3	

Rev. 3.17.11
Note: For Band 4 EIRP limit is 30dBm

UL VERIFICATION SERVICES INC. FORM NO: CCSUP4701I
47173 BENICIA STREET, FREMONT, CA 94538, USA TEL: (510) 771-1000 FAX: (510) 661-0888

This report shall not be reproduced except in full, without the written approval of UL Verification Services Inc.

Band

LTE7

10MHz

QPSK

High Frequency Substitution Measurement
UL Verification Services, Inc. Chamber C

Company: LG
Project #: 14U18112
Date: 06/26/14
Test Engineer: D. Sblendorio
Configuration: EUT
Mode: LTE7, 10MHz, QPSK

Test Equipment:
Receiving: Horn T119, and Chamber C SMA Cables
Substitution: Horn T72 Substitution, 4ft SMA Cable Warehouse

f MHz	SG reading (dBm)	Ant. Pol. (H/V)	Cable Loss (dB)	Antenna Gain (dBd)	EIRP (dBm)	Limit (dBm)	Margin (dB)	Notes
Low Ch								
2505.00	6.84	V	0.9	9.5	15.46	33.0	-17.5	
2505.00	11.48	H	0.9	9.5	20.10	33.0	-12.9	
Mid Ch								
2535.00	9.90	V	0.9	9.5	18.52	33.0	-14.5	
2535.00	12.24	H	0.9	9.5	20.86	33.0	-12.1	
High Ch								
2565.00	9.52	V	0.9	9.5	18.17	33.0	-14.8	
2565.00	10.26	H	0.9	9.5	18.91	33.0	-14.1	

Rev. 3.17.11
Note: For Band 4 EIRP limit is 30dBm

UL VERIFICATION SERVICES INC. FORM NO: CCSUP4701I
47173 BENICIA STREET, FREMONT, CA 94538, USA TEL: (510) 771-1000 FAX: (510) 661-0888

This report shall not be reproduced except in full, without the written approval of UL Verification Services Inc.

Band

LTE7

5MHz

16QAM

High Frequency Substitution Measurement
UL Verification Services, Inc. Chamber C

Company: LG
Project #: 14U18112
Date: 06/26/14
Test Engineer: D. Sblendorio
Configuration: EUT
Mode: LTE7, 5MHz, 16QAM

Test Equipment:
Receiving: Horn T119, and Chamber C SMA Cables
Substitution: Horn T72 Substitution, 4ft SMA Cable Warehouse

f MHz	SG reading (dBm)	Ant. Pol. (H/V)	Cable Loss (dB)	Antenna Gain (dBd)	EIRP (dBm)	Limit (dBm)	Margin (dB)	Notes
Low Ch								
2502.50	7.77	V	0.9	9.5	16.39	33.0	-16.6	
2502.50	10.46	H	0.9	9.5	19.08	33.0	-13.9	
Mid Ch								
2535.00	9.25	V	0.9	9.5	17.87	33.0	-15.1	
2535.00	10.75	H	0.9	9.5	19.37	33.0	-13.6	
High Ch								
2567.50	8.27	V	0.9	9.5	16.92	33.0	-16.1	
2567.50	10.86	H	0.9	9.5	19.51	33.0	-13.5	

Rev. 3.17.11
Note: For Band 4 EIRP limit is 30dBm

UL VERIFICATION SERVICES INC. FORM NO: CCSUP4701I
47173 BENICIA STREET, FREMONT, CA 94538, USA TEL: (510) 771-1000 FAX: (510) 661-0888

This report shall not be reproduced except in full, without the written approval of UL Verification Services Inc.

Band

LTE7

5MHz

QPSK

High Frequency Substitution Measurement
UL Verification Services, Inc. Chamber C

Company: LG
Project #: 14U18112
Date: 06/26/14
Test Engineer: D. Sblendorio
Configuration: EUT
Mode: LTE7, 5MHz, QPSK

Test Equipment:
Receiving: Horn T119, and Chamber C SMA Cables
Substitution: Horn T72 Substitution, 4ft SMA Cable Warehouse

f MHz	SG reading (dBm)	Ant. Pol. (H/V)	Cable Loss (dB)	Antenna Gain (dBd)	EIRP (dBm)	Limit (dBm)	Margin (dB)	Notes
Low Ch								
2502.50	8.40	V	0.9	9.5	17.02	33.0	-16.0	
2502.50	11.09	H	0.9	9.5	19.71	33.0	-13.3	
Mid Ch								
2535.00	11.04	V	0.9	9.5	19.66	33.0	-13.3	
2535.00	11.50	H	0.9	9.5	20.12	33.0	-12.9	
High Ch								
2567.50	10.09	V	0.9	9.5	18.74	33.0	-14.3	
2567.50	12.10	H	0.9	9.5	20.75	33.0	-12.3	

Rev. 3.17.11
Note: For Band 4 EIRP limit is 30dBm

UL VERIFICATION SERVICES INC. FORM NO: CCSUP4701I
47173 BENICIA STREET, FREMONT, CA 94538, USA TEL: (510) 771-1000 FAX: (510) 661-0888

This report shall not be reproduced except in full, without the written approval of UL Verification Services Inc.

Band

LTE5

10MHz

16QAM

High Frequency Substitution Measurement
UL Verification Services, Inc. Chamber C

Company: LG Electronics
Project #: 14U18112
Date: 6/26/14
Test Engineer: Bob Liu
Configuration: EUT ONLY
Mode: LTE5 10MHz FUND 16QAM

Test Equipment:
Receiving: Sunol T407, and 3m Chamber N-type Cable (Setup this one for testing EUT)
Substitution: Dipole S/N: 00022117, 4ft SMA Cable (SN # 245200 001) Warehouse.

f MHz	SG reading (dBm)	Ant. Pol. (H/V)	Cable Loss (dB)	Antenna Gain (dBd)	ERP (dBm)	Limit (dBm)	Margin (dB)	Notes
Low Ch								
829.00	18.98	V	0.9	0.0	18.08	38.5	-20.4	
829.00	22.40	H	0.9	0.0	21.50	38.5	-16.9	
Mid Ch								
836.50	20.37	V	0.9	0.0	19.47	38.5	-19.0	
836.50	21.65	H	0.9	0.0	20.75	38.5	-17.7	
High Ch								
844.00	21.02	V	0.9	0.0	20.12	38.5	-18.3	
844.00	22.01	H	0.9	0.0	21.11	38.5	-17.3	

Rev. 3.17.11
Note: For Band 13/17 ERP limit is 34.77dBm; For Band 26 limit is 50dBm

UL VERIFICATION SERVICES INC. FORM NO: CCSUP4701I
47173 BENICIA STREET, FREMONT, CA 94538, USA TEL: (510) 771-1000 FAX: (510) 661-0888

This report shall not be reproduced except in full, without the written approval of UL Verification Services Inc.

Band

LTE5

10MHz

QPSK

High Frequency Substitution Measurement
UL Verification Services, Inc. Chamber C

Company: LG Electronics
Project #: 14U18112
Date: 6/26/14
Test Engineer: Bob Liu
Configuration: EUT ONLY
Mode: LTE5 10MHz FUND QPSK

Test Equipment:
Receiving: Sunol T407, and 3m Chamber N-type Cable (Setup this one for testing EUT)
Substitution: Dipole S/N: 00022117, 4ft SMA Cable (SN # 245200 001) Warehouse.

f MHz	SG reading (dBm)	Ant. Pol. (H/V)	Cable Loss (dB)	Antenna Gain (dBd)	ERP (dBm)	Limit (dBm)	Margin (dB)	Notes
Low Ch								
829.00	18.55	V	0.9	0.0	17.65	38.5	-20.8	
829.00	22.78	H	0.9	0.0	21.88	38.5	-16.6	
Mid Ch								
836.50	20.30	V	0.9	0.0	19.40	38.5	-19.0	
836.50	21.95	H	0.9	0.0	21.05	38.5	-17.4	
High Ch								
844.00	20.11	V	0.9	0.0	19.21	38.5	-19.2	
844.00	20.92	H	0.9	0.0	20.02	38.5	-18.4	

Rev. 3.17.11
Note: For Band 13/17 ERP limit is 34.77dBm; For Band 26 limit is 50dBm

UL VERIFICATION SERVICES INC. FORM NO: CCSUP4701I
47173 BENICIA STREET, FREMONT, CA 94538, USA TEL: (510) 771-1000 FAX: (510) 661-0888

This report shall not be reproduced except in full, without the written approval of UL Verification Services Inc.

Band

LTE5

5MHz

16QAM

High Frequency Substitution Measurement
UL Verification Services, Inc. Chamber C

Company: LG Electronics
Project #: 14U18112
Date: 4/22/14
Test Engineer: N. Sheridan
Configuration: EUT ONLY
Mode: LTE5 5MHz FUND 16QAM

Test Equipment:
Receiving: Sunol T407, and 3m Chamber N-type Cable (Setup this one for testing EUT)
Substitution: Dipole S/N: 00022117, 4ft SMA Cable (SN # 245200 001) Warehouse.

f MHz	SG reading (dBm)	Ant. Pol. (H/V)	Cable Loss (dB)	Antenna Gain (dBd)	ERP (dBm)	Limit (dBm)	Margin (dB)	Notes
Low Ch								
826.50	16.73	V	0.9	0.0	15.84	38.5	-22.6	
826.50	19.21	H	0.9	0.0	18.31	38.5	-20.1	
Mid Ch								
836.50	14.01	V	0.9	0.0	13.11	38.5	-25.3	
836.50	18.64	H	0.9	0.0	17.74	38.5	-20.7	
High Ch								
846.50	13.05	V	0.9	0.0	12.15	38.5	-26.3	
846.50	20.72	H	0.9	0.0	19.82	38.5	-18.6	

Rev. 3.17.11
Note: For Band 13/17 ERP limit is 34.77dBm; For Band 26 limit is 50dBm

UL VERIFICATION SERVICES INC. FORM NO: CCSUP4701I
47173 BENICIA STREET, FREMONT, CA 94538, USA TEL: (510) 771-1000 FAX: (510) 661-0888

This report shall not be reproduced except in full, without the written approval of UL Verification Services Inc.

Band

LTE5

5MHz

QPSK

High Frequency Substitution Measurement
UL Verification Services, Inc. Chamber C

Company: LG Electronics
Project #: 14U18112
Date: 6/27/14
Test Engineer: N. Sheridan
Configuration: EUT ONLY
Mode: LTE5 5MHz FUND QPSK

Test Equipment:
Receiving: Sunol T407, and 3m Chamber N-type Cable (Setup this one for testing EUT)
Substitution: Dipole S/N: 00022117, 4ft SMA Cable (SN # 245200 001) Warehouse.

f MHz	SG reading (dBm)	Ant. Pol. (H/V)	Cable Loss (dB)	Antenna Gain (dBd)	ERP (dBm)	Limit (dBm)	Margin (dB)	Notes
Low Ch								
826.50	17.42	V	0.9	0.0	16.53	38.5	-21.9	
826.50	19.59	H	0.9	0.0	18.69	38.5	-19.8	
Mid Ch								
836.50	14.85	V	0.9	0.0	13.95	38.5	-24.5	
836.50	19.43	H	0.9	0.0	18.53	38.5	-19.9	
High Ch								
846.50	14.48	V	0.9	0.0	13.58	38.5	-24.9	
846.50	21.52	H	0.9	0.0	20.62	38.5	-17.8	

Rev. 3.17.11
Note: For Band 13/17 ERP limit is 34.77dBm; For Band 26 limit is 50dBm

UL VERIFICATION SERVICES INC. FORM NO: CCSUP4701I
47173 BENICIA STREET, FREMONT, CA 94538, USA TEL: (510) 771-1000 FAX: (510) 661-0888

This report shall not be reproduced except in full, without the written approval of UL Verification Services Inc.

Band

LTE4

10MHz

16QAM

High Frequency Substitution Measurement
UL Verification Services, Inc. Chamber C

Company: LG Electronics
Project #: 14U18112
Date: 06/26/14
Test Engineer: D. Sblendorio
Configuration: EUT Only
Mode: LTE B4 10MHz 16QAM

Test Equipment:
Receiving: Horn T119, and Chamber C SMA Cables
Substitution: Horn T59 Substitution, 4ft SMA Cable Warehouse

f MHz	SG reading (dBm)	Ant. Pol. (H/V)	Cable Loss (dB)	Antenna Gain (dBd)	EIRP (dBm)	Limit (dBm)	Margin (dB)	Notes
Low Ch								
1715.00	15.29	V	0.9	8.3	22.73	30.0	-7.3	
1715.00	14.47	H	0.9	8.3	21.91	30.0	-8.1	
Mid Ch								
1732.50	14.09	V	0.9	8.2	21.44	30.0	-8.6	
1732.50	16.34	H	0.9	8.2	23.69	30.0	-6.3	
High Ch								
1750.00	14.84	V	0.9	8.2	22.19	30.0	-7.8	
1750.00	17.17	H	0.9	8.2	24.52	30.0	-5.5	

Rev. 3.17.11
Note: For Band 4 EIRP limit is 30dBm

UL VERIFICATION SERVICES INC. FORM NO: CCSUP4701I
47173 BENICIA STREET, FREMONT, CA 94538, USA TEL: (510) 771-1000 FAX: (510) 661-0888

This report shall not be reproduced except in full, without the written approval of UL Verification Services Inc.

Band

LTE4

10MHz

QPSK

High Frequency Substitution Measurement
UL Verification Services, Inc. Chamber C

Company: LG Electronics
Project #: 14U18112
Date: 06/26/14
Test Engineer: D. Sblendorio
Configuration: EUT Only
Mode: LTE B4 10MHz QPSK

Test Equipment:
Receiving: Horn T119, and Chamber C SMA Cables
Substitution: Horn T59 Substitution, 4ft SMA Cable Warehouse

f MHz	SG reading (dBm)	Ant. Pol. (H/V)	Cable Loss (dB)	Antenna Gain (dBd)	EIRP (dBm)	Limit (dBm)	Margin (dB)	Notes
Low Ch								
1715.00	16.36	V	0.9	8.3	23.80	30.0	-6.2	
1715.00	16.24	H	0.9	8.3	23.68	30.0	-6.3	
Mid Ch								
1732.50	16.36	V	0.9	8.2	23.71	30.0	-6.3	
1732.50	17.45	H	0.9	8.2	24.80	30.0	-5.2	
High Ch								
1750.00	15.78	V	0.9	8.2	23.13	30.0	-6.9	
1750.00	18.28	H	0.9	8.2	25.63	30.0	-4.4	

Rev. 3.17.11
Note: For Band 4 EIRP limit is 30dBm

UL VERIFICATION SERVICES INC. FORM NO: CCSUP4701I
47173 BENICIA STREET, FREMONT, CA 94538, USA TEL: (510) 771-1000 FAX: (510) 661-0888

This report shall not be reproduced except in full, without the written approval of UL Verification Services Inc.

Band

LTE4

5MHz

16QAM

High Frequency Substitution Measurement
UL Verification Services, Inc. Chamber C

Company: LG Electronics
Project #: 14U18112
Date: 06/26/14
Test Engineer: D. Sblendorio
Configuration: EUT Only
Mode: LTE B4 5MHz 16QAM

Test Equipment:
Receiving: Horn T119, and Chamber C SMA Cables
Substitution: Horn T59 Substitution, 4ft SMA Cable Warehouse

f MHz	SG reading (dBm)	Ant. Pol. (H/V)	Cable Loss (dB)	Antenna Gain (dBd)	EIRP (dBm)	Limit (dBm)	Margin (dB)	Notes
Low Ch								
1712.50	12.89	V	0.9	8.3	20.33	30.0	-9.7	
1712.50	16.68	H	0.9	8.3	24.12	30.0	-5.9	
Mid Ch								
1732.50	13.00	V	0.9	8.2	20.35	30.0	-9.7	
1732.50	18.60	H	0.9	8.2	25.95	30.0	-4.1	
High Ch								
1752.50	12.98	V	0.9	8.2	20.33	30.0	-9.7	
1752.50	17.85	H	0.9	8.2	25.20	30.0	-4.8	

Rev. 3.17.11
Note: For Band 4 EIRP limit is 30dBm

UL VERIFICATION SERVICES INC. FORM NO: CCSUP4701I
47173 BENICIA STREET, FREMONT, CA 94538, USA TEL: (510) 771-1000 FAX: (510) 661-0888

This report shall not be reproduced except in full, without the written approval of UL Verification Services Inc.

Band

LTE4

5MHz

QPSK

High Frequency Substitution Measurement
UL Verification Services, Inc. Chamber C

Company: LG Electronics
Project #: 14U18112
Date: 06/26/14
Test Engineer: D. Sblendorio
Configuration: EUT Only
Mode: LTE B4 5MHz QPSK

Test Equipment:
Receiving: Horn , and Chamber C SMA Cables
Substitution: Horn Substitution, 4ft SMA Cable Warehouse

f MHz	SG reading (dBm)	Ant. Pol. (H/V)	Cable Loss (dB)	Antenna Gain (dBd)	EIRP (dBm)	Limit (dBm)	Margin (dB)	Notes
Low Ch								
1712.50	13.84	V	0.9	8.3	21.28	30.0	-8.7	
1712.50	17.18	H	0.9	8.3	24.62	30.0	-5.4	
Mid Ch								
1732.50	15.22	V	0.9	8.2	22.57	30.0	-7.4	
1732.50	18.78	H	0.9	8.2	26.13	30.0	-3.9	
High Ch								
1752.50	15.03	V	0.9	8.2	22.38	30.0	-7.6	
1752.50	18.96	H	0.9	8.2	26.31	30.0	-3.7	

Rev. 3.17.11
Note: For Band 4 EIRP limit is 30dBm

UL VERIFICATION SERVICES INC. FORM NO: CCSUP4701I
47173 BENICIA STREET, FREMONT, CA 94538, USA TEL: (510) 771-1000 FAX: (510) 661-0888

This report shall not be reproduced except in full, without the written approval of UL Verification Services Inc.

Band

LTE2

10MHz

16QAM

High Frequency Substitution Measurement
UL Verification Services, Inc. Chamber B

Company: LG Electronics
Project #: 14U18112
Date: 06/26/14
Test Engineer: Kelvin Huynh
Configuration: EUT Only Z Position
Mode: LTE B2 10MHz 16QAM

Test Equipment:
Receiving: Horn T345, and Chamber C SMA Cables
Substitution: Horn T72 Substitution, 4ft SMA Cable Warehouse

f MHz	SG reading (dBm)	Ant. Pol. (H/V)	Cable Loss (dB)	Antenna Gain (dBd)	EIRP (dBm)	Limit (dBm)	Margin (dB)	Notes
Low Ch								
1855.00	14.60	V	0.9	7.9	21.65	33.0	-11.4	
1855.00	16.70	H	0.9	7.9	23.75	33.0	-9.3	
Mid Ch								
1880.00	14.80	V	0.9	7.9	21.85	33.0	-11.2	
1880.00	16.60	H	0.9	7.9	23.65	33.0	-9.4	
High Ch								
1905.00	14.20	V	0.9	7.9	21.25	33.0	-11.8	
1905.00	15.20	H	0.9	7.9	22.25	33.0	-10.8	

Rev. 3.17.11
Note: For Band 4 EIRP limit is 30dBm

UL VERIFICATION SERVICES INC. FORM NO: CCSUP4701I
47173 BENICIA STREET, FREMONT, CA 94538, USA TEL: (510) 771-1000 FAX: (510) 661-0888

This report shall not be reproduced except in full, without the written approval of UL Verification Services Inc.

Band

LTE2

10MHz

QPSK

High Frequency Substitution Measurement
UL Verification Services, Inc. Chamber B

Company: LG Electronics
Project #: 14U18112
Date: 06/26/14
Test Engineer: Kelvin Huynh
Configuration: EUT Only Z Position
Mode: LTE B2 10MHz QPSK

Test Equipment:
Receiving: Horn T345, and Chamber C SMA Cables
Substitution: Horn T72 Substitution, 4ft SMA Cable Warehouse

f MHz	SG reading (dBm)	Ant. Pol. (H/V)	Cable Loss (dB)	Antenna Gain (dBd)	EIRP (dBm)	Limit (dBm)	Margin (dB)	Notes
Low Ch								
1855.00	15.50	V	0.9	7.9	22.55	33.0	-10.5	
1855.00	17.60	H	0.9	7.9	24.65	33.0	-8.4	
Mid Ch								
1880.00	15.70	V	0.9	7.9	22.75	33.0	-10.3	
1880.00	17.40	H	0.9	7.9	24.45	33.0	-8.6	
High Ch								
1905.00	15.30	V	0.9	7.9	22.35	33.0	-10.7	
1905.00	16.30	H	0.9	7.9	23.35	33.0	-9.7	

Rev. 3.17.11
Note: For Band 4 EIRP limit is 30dBm

UL VERIFICATION SERVICES INC. FORM NO: CCSUP4701I
47173 BENICIA STREET, FREMONT, CA 94538, USA TEL: (510) 771-1000 FAX: (510) 661-0888

This report shall not be reproduced except in full, without the written approval of UL Verification Services Inc.

Band

LTE2

5MHz

16QAM

High Frequency Substitution Measurement
UL Verification Services, Inc. Chamber C

Company: LG Electronics
Project #: 14U18112
Date: 06/25/14
Test Engineer: Kelvin Huynh
Configuration: EUT Only Z Position
Mode: LTE B2 5MHz 16QAM

Test Equipment:
Receiving: Horn T119, and Chamber C SMA Cables
Substitution: Horn T345 Substitution, 4ft SMA Cable Warehouse

f MHz	SG reading (dBm)	Ant. Pol. (H/V)	Cable Loss (dB)	Antenna Gain (dBd)	EIRP (dBm)	Limit (dBm)	Margin (dB)	Notes
Low Ch								
1852.50	11.50	V	0.9	7.9	18.55	33.0	-14.5	
1852.50	16.40	H	0.9	7.9	23.45	33.0	-9.6	
Mid Ch								
1880.00	8.50	V	0.9	7.9	15.55	33.0	-17.5	
1880.00	16.10	H	0.9	7.9	23.15	33.0	-9.9	
High Ch								
1907.50	9.30	V	0.9	7.9	16.35	33.0	-16.7	
1907.50	14.20	H	0.9	7.9	21.25	33.0	-11.8	

Rev. 3.17.11
Note: For Band 4 EIRP limit is 30dBm

UL VERIFICATION SERVICES INC. FORM NO: CCSUP4701I
47173 BENICIA STREET, FREMONT, CA 94538, USA TEL: (510) 771-1000 FAX: (510) 661-0888

This report shall not be reproduced except in full, without the written approval of UL Verification Services Inc.

Band

LTE2

5MHz

QPSK

High Frequency Substitution Measurement
UL Verification Services, Inc. Chamber C

Company: LG Electronics
Project #: 14U18112
Date: 06/25/14
Test Engineer: Kelvin Huynh
Configuration: EUT Only Z Position
Mode: LTE B2 5MHz QPSK

Test Equipment:
Receiving: Horn T119, and Chamber C SMA Cables
Substitution: Horn T345 Substitution, 4ft SMA Cable Warehouse

f MHz	SG reading (dBm)	Ant. Pol. (H/V)	Cable Loss (dB)	Antenna Gain (dBd)	EIRP (dBm)	Limit (dBm)	Margin (dB)	Notes
Low Ch								
1852.50	12.20	V	0.9	7.9	19.25	33.0	-13.8	
1852.50	17.40	H	0.9	7.9	24.45	33.0	-8.6	
Mid Ch								
1880.00	9.40	V	0.9	7.9	16.45	33.0	-16.6	
1880.00	17.10	H	0.9	7.9	24.15	33.0	-8.9	
High Ch								
1907.50	10.50	V	0.9	7.9	17.55	33.0	-15.5	
1907.50	15.40	H	0.9	7.9	22.45	33.0	-10.6	

Rev. 3.17.11
Note: For Band 4 EIRP limit is 30dBm

UL VERIFICATION SERVICES INC. FORM NO: CCSUP4701I
47173 BENICIA STREET, FREMONT, CA 94538, USA TEL: (510) 771-1000 FAX: (510) 661-0888

This report shall not be reproduced except in full, without the written approval of UL Verification Services Inc.

Band

Band 2

HSDPA

High Frequency Substitution Measurement
UL Verification Services, Inc. Chamber C

Company: LG
Project #: 14U18112
Date: 06/26/14
Test Engineer: Bob Liu
Configuration: Z Position, EUT only
Mode: WCDMA_HSDPA_1900

Test Equipment:
Receiving: Horn T119, and Chamber C SMA Cables
Substitution: Horn T59 Substitution, 4ft SMA Cable Warehouse

f MHz	SG reading (dBm)	Ant. Pol. (H/V)	Cable Loss (dB)	Antenna Gain (dBd)	EIRP (dBm)	Limit (dBm)	Margin (dB)	Notes
Low Ch								
1852.40	13.77	V	0.85	7.9	20.77	33.0	-12.2	
1852.40	15.35	H	0.85	7.9	22.35	33.0	-10.7	
Mid Ch								
1880.00	12.38	V	0.85	7.9	19.38	33.0	-13.6	
1880.00	15.67	H	0.85	7.9	22.67	33.0	-10.3	
High Ch								
1907.60	15.56	V	0.85	7.9	22.56	33.0	-10.4	
1907.60	15.23	H	0.85	7.9	22.23	33.0	-10.8	

Rev. 3.17.11
Note: For Band 4 EIRP limit is 30dBm

UL VERIFICATION SERVICES INC. FORM NO: CCSUP4701I
47173 BENICIA STREET, FREMONT, CA 94538, USA TEL: (510) 771-1000 FAX: (510) 661-0888

This report shall not be reproduced except in full, without the written approval of UL Verification Services Inc.

Band

Band 2

REL99

High Frequency Substitution Measurement
UL Verification Services, Inc. Chamber C

Company: LG
Project #: 14U18112
Date: 06/26/14
Test Engineer: Bob Liu
Configuration: Z Position, EUT only
Mode: WCDMA_Rel 99_1900

Test Equipment:
Receiving: Horn T119, and Chamber C SMA Cables
Substitution: Horn T59 Substitution, 4ft SMA Cable Warehouse

f MHz	SG reading (dBm)	Ant. Pol. (H/V)	Cable Loss (dB)	Antenna Gain (dBd)	EIRP (dBm)	Limit (dBm)	Margin (dB)	Notes
Low Ch								
1852.40	13.45	V	0.85	7.9	20.45	33.0	-12.6	
1852.40	15.65	H	0.85	7.9	22.65	33.0	-10.4	
Mid Ch								
1880.00	13.67	V	0.85	7.9	20.67	33.0	-12.3	
1880.00	15.58	H	0.85	7.9	22.58	33.0	-10.4	
High Ch								
1907.60	15.06	V	0.85	7.9	22.06	33.0	-10.9	
1907.60	15.23	H	0.85	7.9	22.23	33.0	-10.8	

Rev. 3.17.11
Note: For Band 4 EIRP limit is 30dBm

UL VERIFICATION SERVICES INC. FORM NO: CCSUP4701I
47173 BENICIA STREET, FREMONT, CA 94538, USA TEL: (510) 771-1000 FAX: (510) 661-0888

This report shall not be reproduced except in full, without the written approval of UL Verification Services Inc.

Band

Band 5

HSDPA

High Frequency Substitution Measurement
UL Verification Services, Inc. Chamber B

Company: LG
Project #: 14U18112
Date: 06/26/14
Test Engineer: D. Soper
Configuration: EUT only
Mode: WCDMA_HSDPA_850

Test Equipment:
Receiving: Sunol T243, and 3m Chamber N-type Cable (Setup this one for testing EUT)
Substitution: Dipole S/N: 00022117, 4ft SMA Cable (SN # 245200 001) Warehouse.

f MHz	SG reading (dBm)	Ant. Pol. (H/V)	Cable Loss (dB)	Antenna Gain (dBd)	ERP (dBm)	Limit (dBm)	Margin (dB)	Notes
Low Ch								
826.40	13.32	V	0.9	0.0	12.42	38.5	-26.0	
826.40	21.36	H	0.9	0.0	20.46	38.5	-18.0	
Mid Ch								
836.60	13.80	V	0.9	0.0	12.90	38.5	-25.5	
836.60	21.88	H	0.9	0.0	20.98	38.5	-17.5	
High Ch								
846.60	15.50	V	0.9	0.0	14.60	38.5	-23.8	
846.60	21.74	H	0.9	0.0	20.84	38.5	-17.6	

Rev. 3.17.11
Note: For Band 13/17 ERP limit is 34.77dBm; For Band 26 limit is 50dBm

UL VERIFICATION SERVICES INC. FORM NO: CCSUP4701I
47173 BENICIA STREET, FREMONT, CA 94538, USA TEL: (510) 771-1000 FAX: (510) 661-0888

This report shall not be reproduced except in full, without the written approval of UL Verification Services Inc.

Band

Band 5

REL99

High Frequency Substitution Measurement
UL Verification Services, Inc. Chamber B

Company: LG
Project #: 14U18112
Date: 06/26/14
Test Engineer: D. Soper
Configuration: EUT only
Mode: WCDMA_REL99_850

Test Equipment:
Receiving: Sunol T243, and 3m Chamber N-type Cable (Setup this one for testing EUT)
Substitution: Dipole S/N: 00022117, 4ft SMA Cable (SN # 245200 001) Warehouse.

f MHz	SG reading (dBm)	Ant. Pol. (H/V)	Cable Loss (dB)	Antenna Gain (dBd)	ERP (dBm)	Limit (dBm)	Margin (dB)	Notes
Low Ch								
826.40	13.64	V	0.9	0.0	12.74	38.5	-25.7	
826.40	21.55	H	0.9	0.0	20.65	38.5	-17.8	
Mid Ch								
836.60	14.07	V	0.9	0.0	13.17	38.5	-25.3	
836.60	22.46	H	0.9	0.0	21.56	38.5	-16.9	
High Ch								
846.60	14.23	V	0.9	0.0	13.33	38.5	-25.1	
846.60	21.89	H	0.9	0.0	20.99	38.5	-17.5	

Rev. 3.17.11
Note: For Band 13/17 ERP limit is 34.77dBm; For Band 26 limit is 50dBm

UL VERIFICATION SERVICES INC. FORM NO: CCSUP4701I
47173 BENICIA STREET, FREMONT, CA 94538, USA TEL: (510) 771-1000 FAX: (510) 661-0888

This report shall not be reproduced except in full, without the written approval of UL Verification Services Inc.

Band

GSM1900

EGPRS

High Frequency Substitution Measurement
UL Verification Services, Inc. Chamber C

Company: LG
Project #: 14U18112
Date: 06/25/14
Test Engineer: Kelvin Huynh
Configuration: EUT only Z position
Mode: EGPRS 1900MHz

Test Equipment:
Receiving: Horn T119, and Chamber C SMA Cables
Substitution: Horn T345 Substitution, 4ft SMA Cable Warehouse

f MHz	SG reading (dBm)	Ant. Pol. (H/V)	Cable Loss (dB)	Antenna Gain (dBd)	EIRP (dBm)	Limit (dBm)	Margin (dB)	Notes
Low Ch								
1850.20	20.38	V	0.85	4.4	23.93	33.0	-9.1	
1850.20	22.04	H	0.85	4.4	25.59	33.0	-7.4	
Mid Ch								
1880.00	20.52	V	0.85	4.4	24.07	33.0	-8.9	
1880.00	22.55	H	0.85	4.4	26.10	33.0	-6.9	
High Ch								
1909.80	18.27	V	0.85	4.4	21.82	33.0	-11.2	
1909.80	19.95	H	0.85	4.4	23.50	33.0	-9.5	

Rev. 3.17.11
Note: For Band 4 EIRP limit is 30dBm

UL VERIFICATION SERVICES INC. FORM NO: CCSUP4701I
47173 BENICIA STREET, FREMONT, CA 94538, USA TEL: (510) 771-1000 FAX: (510) 661-0888

This report shall not be reproduced except in full, without the written approval of UL Verification Services Inc.

Band

GSM1 900

GPRS

High Frequency Substitution Measurement
UL Verification Services, Inc. Chamber C

Company: LG
Project #: 14U18112
Date: 06/25/14
Test Engineer: Kelvin Huynh
Configuration: EUT only Z position
Mode: GPRS 1900MHz

Test Equipment:
Receiving: Horn T119, and Chamber C SMA Cables
Substitution: Horn T345 Substitution, 4ft SMA Cable Warehouse

f MHz	SG reading (dBm)	Ant. Pol. (H/V)	Cable Loss (dB)	Antenna Gain (dBd)	EIRP (dBm)	Limit (dBm)	Margin (dB)	Notes
Low Ch								
1850.20	22.38	V	0.85	4.4	25.93	33.0	-7.1	
1850.20	24.09	H	0.85	4.4	27.64	33.0	-5.4	
Mid Ch								
1880.00	22.54	V	0.85	4.4	26.09	33.0	-6.9	
1880.00	24.40	H	0.85	4.4	27.95	33.0	-5.1	
High Ch								
1909.80	20.59	V	0.85	4.4	24.14	33.0	-8.9	
1909.80	21.64	H	0.85	4.4	25.19	33.0	-7.8	

Rev. 3.17.11
Note: For Band 4 EIRP limit is 30dBm

UL VERIFICATION SERVICES INC. FORM NO: CCSUP4701I
47173 BENICIA STREET, FREMONT, CA 94538, USA TEL: (510) 771-1000 FAX: (510) 661-0888

This report shall not be reproduced except in full, without the written approval of UL Verification Services Inc.

Band

GSM850

EGPRS

High Frequency Substitution Measurement
Compliance Certification Services Chamber B

Company: LG
Project #: 14U18112
Date: 06/26/14
Test Engineer: O. Stoelting
Configuration: EUT only
Mode: EGRPS 850MHz

Test Equipment:
Receiving: Sunol T243, and 5m Chamber N-type Cable (Setup this one for testing EUT)
Substitution: Dipole S/N: 00022117, 4ft SMA Cable (SN # 245200 001) Warehouse.

f MHz	SG reading (dBm)	Ant. Pol. (H/V)	Cable Loss (dB)	Antenna Gain (dBd)	ERP (dBm)	Limit (dBm)	Margin (dB)	Notes
Low Ch								
824.20	20.89	V	0.9	0.0	19.99	38.5	-18.5	
824.20	27.25	H	0.9	0.0	26.35	38.5	-12.1	
Mid Ch								
836.60	22.43	V	0.9	0.0	21.54	38.5	-16.9	
836.60	27.97	H	0.9	0.0	27.07	38.5	-11.4	
High Ch								
848.80	23.46	V	0.9	0.0	22.56	38.5	-15.9	
848.80	28.29	H	0.9	0.0	27.39	38.5	-11.1	

Rev. 3.17.11

UL VERIFICATION SERVICES INC. FORM NO: CCSUP4701I
47173 BENICIA STREET, FREMONT, CA 94538, USA TEL: (510) 771-1000 FAX: (510) 661-0888

This report shall not be reproduced except in full, without the written approval of UL Verification Services Inc.

Band

GSM850

GPRS

High Frequency Substitution Measurement
Compliance Certification Services Chamber B

Company: LG
Project #: 14U18112
Date: 06/26/14
Test Engineer: O. Stoelting
Configuration: EUT only
Mode: GRPS 850MHz

Test Equipment:
Receiving: Sunol T243, and 5m Chamber N-type Cable (Setup this one for testing EUT)
Substitution: Dipole S/N: 00022117, 4ft SMA Cable (SN # 245200 001) Warehouse.

f MHz	SG reading (dBm)	Ant. Pol. (H/V)	Cable Loss (dB)	Antenna Gain (dBd)	ERP (dBm)	Limit (dBm)	Margin (dB)	Notes
Low Ch								
824.20	22.47	V	0.9	0.0	21.57	38.5	-16.9	
824.20	29.83	H	0.9	0.0	28.94	38.5	-9.5	
Mid Ch								
836.60	22.92	V	0.9	0.0	22.02	38.5	-16.4	
836.60	30.20	H	0.9	0.0	29.30	38.5	-9.2	
High Ch								
848.80	22.92	V	0.9	0.0	22.02	38.5	-16.4	
848.80	30.03	H	0.9	0.0	29.13	38.5	-9.3	

Rev. 3.17.11

UL VERIFICATION SERVICES INC. FORM NO: CCSUP4701I
47173 BENICIA STREET, FREMONT, CA 94538, USA TEL: (510) 771-1000 FAX: (510) 661-0888

This report shall not be reproduced except in full, without the written approval of UL Verification Services Inc.

8.2. FIELD STRENGTH OF SPURIOUS RADIATION

RULE PART(S)

FCC: §2.1053, §22.917, §24.238, and §27

LIMIT

§22.917 (e) and §24.238 (a): Out of band emissions. The power of any emission outside of the authorized operating frequency ranges must be attenuated below the transmitting power (P) by a factor of at least 43 + 10 log (P) dB

RESULTS

UL VERIFICATION SERVICES INC. FORM NO: CCSUP4701I
47173 BENICIA STREET, FREMONT, CA 94538, USA TEL: (510) 771-1000 FAX: (510) 661-0888

This report shall not be reproduced except in full, without the written approval of UL Verification Services Inc.

8.2.1. SPURIOUS RADIATION DATA

Compliance Certification Services
Above 1GHz High Frequency Substitution Measurement

Company: LG
Project #: 14U18112
Date: 06/27/14
Test Engineer: Kelvin Huynh
Configuration: EUT with AC charger
Mode: TX, LTE B17 10MHz har 16QAM

Chamber	Pre-amplifer	Filter	Limit
5m Chamber A	T145 8449B	Filter 1	

Band: LTE17 10MHz 16QAM

f GHz	SG reading (dBm)	Ant. Pol. (H/V)	Distance (m)	Preamp (dB)	Filter (dB)	ERP (dBm)	Limit (dBm)	Delta (dB)	Notes
Low Ch, (709MHz)									
1.418	-21.5	V	3.0	33.1	1.0	-53.6	-13.0	-40.6	
2.127	-23.5	V	3.0	31.6	1.0	-54.1	-13.0	-41.1	
2.836	-28.5	V	3.0	31.0	1.0	-58.5	-13.0	-45.5	
1.418	-19.2	H	3.0	33.1	1.0	-51.3	-13.0	-38.3	
2.127	-29.1	H	3.0	31.6	1.0	-59.7	-13.0	-46.7	
2.836	-29.2	H	3.0	31.0	1.0	-59.3	-13.0	-46.3	
Mid Ch, (710MHz)									
1.420	-21.8	V	3.0	33.1	1.0	-53.9	-13.0	-40.9	
2.130	-22.5	V	3.0	31.6	1.0	-53.1	-13.0	-40.1	
2.840	-28.5	V	3.0	31.0	1.0	-58.5	-13.0	-45.5	
1.420	-19.5	H	3.0	33.1	1.0	-51.6	-13.0	-38.6	
2.130	-24.4	H	3.0	31.6	1.0	-54.9	-13.0	-41.9	
2.840	-27.4	H	3.0	31.0	1.0	-57.4	-13.0	-44.4	
High Ch, (711MHz)									
1.422	-22.6	V	3.0	33.1	1.0	-54.7	-13.0	-41.7	
2.133	-21.4	V	3.0	31.6	1.0	-51.9	-13.0	-38.9	
2.844	-28.5	V	3.0	31.0	1.0	-58.5	-13.0	-45.5	
1.422	-22.8	H	3.0	33.1	1.0	-54.9	-13.0	-41.9	
2.133	-27.7	H	3.0	31.6	1.0	-58.2	-13.0	-45.2	
2.844	-28.1	H	3.0	31.0	1.0	-58.1	-13.0	-45.1	

Rev. 03.03.09
Note: No other emissions were detected above the system noise floor.

UL VERIFICATION SERVICES INC. FORM NO: CCSUP4701I
47173 BENICIA STREET, FREMONT, CA 94538, USA TEL: (510) 771-1000 FAX: (510) 661-0888

This report shall not be reproduced except in full, without the written approval of UL Verification Services Inc.

Compliance Certification Services
Above 1GHz High Frequency Substitution Measurement

Company: LG
Project #: 14U18112
Date: 06/27/14
Test Engineer: Kelvin Huynh
Configuration: EUT with AC charger
Mode: TX, LTE B17 10MHz har QPSK

Chamber	Pre-amplifer	Filter	Limit
5m Chamber A	T145 8449B	Filter 1	

Band

LTE17

10MHz

QPSK

f GHz	SG reading (dBm)	Ant. Pol. (H/V)	Distance (m)	Preamp (dB)	Filter (dB)	ERP (dBm)	Limit (dBm)	Delta (dB)	Notes
Low Ch, (709MHz)									
1.418	-21.1	V	3.0	33.1	1.0	-53.2	-13.0	-40.2	
2.127	-23.6	V	3.0	31.6	1.0	-54.2	-13.0	-41.2	
2.836	-28.6	V	3.0	31.0	1.0	-58.6	-13.0	-45.6	
1.418	-19.2	H	3.0	33.1	1.0	-51.3	-13.0	-38.3	
2.127	-29.1	H	3.0	31.6	1.0	-59.7	-13.0	-46.7	
2.836	-29.2	H	3.0	31.0	1.0	-59.3	-13.0	-46.3	
Mid Ch, (710MHz)									
1.420	-21.9	V	3.0	33.1	1.0	-54.0	-13.0	-41.0	
2.130	-22.1	V	3.0	31.6	1.0	-52.7	-13.0	-39.7	
2.840	-28.6	V	3.0	31.0	1.0	-58.7	-13.0	-45.7	
1.420	-20.3	H	3.0	33.1	1.0	-52.3	-13.0	-39.3	
2.130	-25.2	H	3.0	31.6	1.0	-55.8	-13.0	-42.8	
2.840	-26.9	H	3.0	31.0	1.0	-56.9	-13.0	-43.9	
High Ch, (711MHz)									
1.422	-22.5	V	3.0	33.1	1.0	-54.5	-13.0	-41.5	
2.133	-21.6	V	3.0	31.6	1.0	-52.1	-13.0	-39.1	
2.844	-28.3	V	3.0	31.0	1.0	-58.3	-13.0	-45.3	
1.422	-19.9	H	3.0	33.1	1.0	-52.0	-13.0	-39.0	
2.133	-23.8	H	3.0	31.6	1.0	-54.4	-13.0	-41.4	
2.844	-26.6	H	3.0	31.0	1.0	-56.6	-13.0	-43.6	

Rev. 03.03.09
Note: No other emissions were detected above the system noise floor.

UL VERIFICATION SERVICES INC. FORM NO: CCSUP4701I
47173 BENICIA STREET, FREMONT, CA 94538, USA TEL: (510) 771-1000 FAX: (510) 661-0888

This report shall not be reproduced except in full, without the written approval of UL Verification Services Inc.

Compliance Certification Services
Above 1GHz High Frequency Substitution Measurement

Company: LG
Project #: 14U18112
Date: 06/27/14
Test Engineer: Kelvin Huynh
Configuration: EUT with AC charger
Mode: TX, LTE B17 5MHz har 16QAM

Chamber	Pre-amplifer	Filter	Limit
3m Chamber	T145 8449B	Filter 1	

Band

LTE17

5MHz

16QAM

f GHz	SG reading (dBm)	Ant. Pol. (H/V)	Distance (m)	Preamp (dB)	Filter (dB)	ERP (dBm)	Limit (dBm)	Delta (dB)	Notes
Low Ch, (706.5MHz)									
1.413	-24.3	V	3.0	33.1	1.0	-56.4	-13.0	-43.4	
2.120	-23.8	V	3.0	31.6	1.0	-54.4	-13.0	-41.4	
2.826	-22.8	V	3.0	31.0	1.0	-52.9	-13.0	-39.9	
1.413	-19.9	H	3.0	33.1	1.0	-52.0	-13.0	-39.0	
2.120	-20.3	H	3.0	31.6	1.0	-50.9	-13.0	-37.9	
2.826	-23.4	H	3.0	31.0	1.0	-53.5	-13.0	-40.5	
Mid Ch, (710MHz)									
1.420	-26.0	V	3.0	33.1	1.0	-58.0	-13.0	-45.0	
2.130	-19.9	V	3.0	31.6	1.0	-50.5	-13.0	-37.5	
2.840	-22.7	V	3.0	31.0	1.0	-52.7	-13.0	-39.7	
1.420	-21.2	H	3.0	33.1	1.0	-53.3	-13.0	-40.3	
2.130	-18.3	H	3.0	31.6	1.0	-48.9	-13.0	-35.9	
2.840	-23.5	H	3.0	31.0	1.0	-53.5	-13.0	-40.5	
High Ch, (713.5MHz)									
1.427	-25.4	V	3.0	33.1	1.0	-57.5	-13.0	-44.5	
2.141	-22.6	V	3.0	31.6	1.0	-53.1	-13.0	-40.1	
2.854	-22.4	V	3.0	31.0	1.0	-52.4	-13.0	-39.4	
1.427	-21.0	H	3.0	33.1	1.0	-53.1	-13.0	-40.1	
2.141	-17.5	H	3.0	31.6	1.0	-48.1	-13.0	-35.1	
2.854	-23.2	H	3.0	31.0	1.0	-53.2	-13.0	-40.2	

Rev. 03.03.09
Note: No other emissions were detected above the system noise floor.

UL VERIFICATION SERVICES INC. FORM NO: CCSUP4701I
47173 BENICIA STREET, FREMONT, CA 94538, USA TEL: (510) 771-1000 FAX: (510) 661-0888

This report shall not be reproduced except in full, without the written approval of UL Verification Services Inc.

Compliance Certification Services
Above 1GHz High Frequency Substitution Measurement

Company: LG
Project #: 14U18112
Date: 06/27/14
Test Engineer: Kelvin Huynh
Configuration: EUT with AC charger
Mode: TX, LTE B17 5MHz har QPSK

Chamber	Pre-amplifer	Filter	Limit
3m Chamber	T145 8449B	Filter 1	

Band	f GHz	SG reading (dBm)	Ant. Pol. (H/V)	Distance (m)	Preamp (dB)	Filter (dB)	ERP (dBm)	Limit (dBm)	Delta (dB)	Notes
	Low Ch, (706.5MHz)									
LTE17	1.413	-24.7	V	3.0	33.1	1.0	-56.7	-13.0	-43.7	
	2.120	-23.2	V	3.0	31.6	1.0	-53.8	-13.0	-40.8	
5MHz	2.826	-22.7	V	3.0	31.0	1.0	-52.7	-13.0	-39.7	
	1.413	-20.0	H	3.0	33.1	1.0	-52.1	-13.0	-39.1	
QPSK	2.120	-19.9	H	3.0	31.6	1.0	-50.5	-13.0	-37.5	
	2.826	-23.9	H	3.0	31.0	1.0	-54.0	-13.0	-41.0	
	Mid Ch, (710MHz)									
	1.420	-25.7	V	3.0	33.1	1.0	-57.8	-13.0	-44.8	
	2.130	-20.3	V	3.0	31.6	1.0	-50.9	-13.0	-37.9	
	2.840	-18.2	V	3.0	31.0	1.0	-48.2	-13.0	-35.2	
	1.420	-21.0	H	3.0	33.1	1.0	-53.1	-13.0	-40.1	
	2.130	-18.5	H	3.0	31.6	1.0	-49.1	-13.0	-36.1	
	2.840	-22.8	H	3.0	31.0	1.0	-52.9	-13.0	-39.9	
	High Ch, (713.5MHz)									
	1.427	-25.3	V	3.0	33.1	1.0	-57.4	-13.0	-44.4	
	2.141	-22.5	V	3.0	31.6	1.0	-53.1	-13.0	-40.1	
	2.854	-22.3	V	3.0	31.0	1.0	-52.3	-13.0	-39.3	
	1.427	-20.3	H	3.0	33.1	1.0	-52.3	-13.0	-39.3	
	2.141	-17.6	H	3.0	31.6	1.0	-48.1	-13.0	-35.1	
	2.854	-22.6	H	3.0	31.0	1.0	-52.6	-13.0	-39.6	

Rev. 03.03.09
Note: No other emissions were detected above the system noise floor.

UL VERIFICATION SERVICES INC. FORM NO: CCSUP4701I
47173 BENICIA STREET, FREMONT, CA 94538, USA TEL: (510) 771-1000 FAX: (510) 661-0888

This report shall not be reproduced except in full, without the written approval of UL Verification Services Inc.

UL Verification Services
Above 1GHz High Frequency Substitution Measurement

Company:	LG
Project #:	14U18112
Date:	06/27/14
Test Engineer:	Kelvin Huynh
Configuration:	EUT with AC charger
Mode:	TX, LTE BAND 7, 20MHz BW,16QAM

Chamber	Pre-amplifer	Filter	Limit
3m Chamber	T34 8449B	Filter 1	FCC Part 27

Band

LTE7

20MHz

16QAM

f GHz	SG reading (dBm)	Ant. Pol. (H/V)	Distance (m)	Preamp (dB)	Filter (dB)	ERP (dBm)	Limit (dBm)	Delta (dB)	Notes
Low Channel (2510MHz)									
5.010	-8.3	V	3.0	34.8	1.0	-42.1	-25.0	-17.1	
7.515	-12.6	V	3.0	34.9	1.0	-46.6	-25.0	-21.6	
10.020	-10.5	V	3.0	35.4	1.0	-44.8	-25.0	-19.8	
5.010	-7.3	H	3.0	34.8	1.0	-41.1	-25.0	-16.1	
7.515	-12.2	H	3.0	34.9	1.0	-46.1	-25.0	-21.1	
10.020	-8.4	H	3.0	35.4	1.0	-42.8	-25.0	-17.8	
Mid Channel (2535MHz)									
5.070	-9.7	V	3.0	34.7	1.0	-43.4	-25.0	-18.4	
7.605	-11.9	V	3.0	34.9	1.0	-45.8	-25.0	-20.8	
10.122	-5.2	V	3.0	35.3	1.0	-39.5	-25.0	-14.5	
5.070	-9.6	H	3.0	34.7	1.0	-43.3	-25.0	-18.3	
7.605	-11.7	H	3.0	34.9	1.0	-45.7	-25.0	-20.7	
10.122	-5.0	H	3.0	35.3	1.0	-39.3	-25.0	-14.3	
High Channel (2560MHz)									
5.120	-9.6	V	3.0	34.7	1.0	-43.3	-25.0	-18.3	
7.680	-12.5	V	3.0	35.0	1.0	-46.5	-25.0	-21.5	
10.240	-8.7	V	3.0	35.2	1.0	-42.9	-25.0	-17.9	
5.120	-11.8	H	3.0	34.7	1.0	-45.6	-25.0	-20.6	
7.680	-11.6	H	3.0	35.0	1.0	-45.5	-25.0	-20.5	
10.240	-9.5	H	3.0	35.2	1.0	-43.8	-25.0	-18.8	

Rev. 03.03.09
Note: No other emissions were detected above the system noise floor.

UL VERIFICATION SERVICES INC. FORM NO: CCSUP4701I
47173 BENICIA STREET, FREMONT, CA 94538, USA TEL: (510) 771-1000 FAX: (510) 661-0888

This report shall not be reproduced except in full, without the written approval of UL Verification Services Inc.

Band

LTE7

20MHz

QPSK

UL Verification Services
Above 1GHz High Frequency Substitution Measurement

Company: LG
Project #: 14U18112
Date: 06/27/14
Test Engineer: Kelvin Huynh
Configuration: EUT with AC charger
Mode: TX, LTE BAND 7, 20MHz BW, QPSK

Chamber	Pre-amplifer	Filter	Limit
3m Chamber	T34 8449B	Filter 1	FCC Part 27

f GHz	SG reading (dBm)	Ant. Pol. (H/V)	Distance (m)	Preamp (dB)	Filter (dB)	ERP (dBm)	Limit (dBm)	Delta (dB)	Notes
Low Channel (2510MHz)									
5.010	-8.1	V	3.0	34.8	1.0	-41.8	-25.0	-16.8	
7.515	-12.9	V	3.0	34.9	1.0	-46.8	-25.0	-21.8	
10.020	-9.4	V	3.0	35.4	1.0	-43.8	-25.0	-18.8	
5.010	-6.5	H	3.0	34.8	1.0	-40.3	-25.0	-15.3	
7.515	-11.9	H	3.0	34.9	1.0	-45.9	-25.0	-20.9	
10.020	-7.5	H	3.0	35.4	1.0	-41.9	-25.0	-16.9	
Mid Channel (2535MHz)									
5.070	-7.7	V	3.0	34.7	1.0	-41.4	-25.0	-16.4	
7.605	-12.3	V	3.0	34.9	1.0	-46.2	-25.0	-21.2	
10.122	-4.2	V	3.0	35.3	1.0	-38.5	-25.0	-13.5	
5.070	-8.4	H	3.0	34.7	1.0	-42.1	-25.0	-17.1	
7.605	-11.6	H	3.0	34.9	1.0	-45.5	-25.0	-20.5	
10.122	-3.7	H	3.0	35.3	1.0	-38.0	-25.0	-13.0	
High Channel (2560MHz)									
5.120	-9.2	V	3.0	34.7	1.0	-42.9	-25.0	-17.9	
7.680	-12.7	V	3.0	35.0	1.0	-46.6	-25.0	-21.6	
10.240	-8.5	V	3.0	35.2	1.0	-42.7	-25.0	-17.7	
5.120	-10.6	H	3.0	34.7	1.0	-44.4	-25.0	-19.4	
7.680	-11.5	H	3.0	35.0	1.0	-45.5	-25.0	-20.5	
10.240	-9.3	H	3.0	35.2	1.0	-43.5	-25.0	-18.5	

Rev. 03.03.09
Note: No other emissions were detected above the system noise floor.

UL VERIFICATION SERVICES INC. FORM NO: CCSUP4701I
47173 BENICIA STREET, FREMONT, CA 94538, USA TEL: (510) 771-1000 FAX: (510) 661-0888

This report shall not be reproduced except in full, without the written approval of UL Verification Services Inc.

Band

LTE7

15MHz

16QAM

UL Verification Services
Above 1GHz High Frequency Substitution Measurement

Company: LG
Project #: 14U18112
Date: 06/27/14
Test Engineer: Bob Liu
Configuration: EUT with AC charger
Mode: TX, LTE BAND 7, 15MHz BW,16QAM

Chamber	Pre-amplifer	Filter	Limit
3m Chamber	T34 8449B	Filter 1	FCC Part 27

f GHz	SG reading (dBm)	Ant. Pol. (H/V)	Distance (m)	Preamp (dB)	Filter (dB)	ERP (dBm)	Limit (dBm)	Delta (dB)	Notes
Low Channel (2507.5MHz)									
5.010	-8.2	V	3.0	34.8	1.0	-42.0	-25.0	-17.0	
7.515	-13.8	V	3.0	34.9	1.0	-47.7	-25.0	-22.7	
10.020	-10.7	V	3.0	35.4	1.0	-45.1	-25.0	-20.1	
5.010	-10.9	H	3.0	34.8	1.0	-44.6	-25.0	-19.6	
7.515	-13.3	H	3.0	34.9	1.0	-47.2	-25.0	-22.2	
10.020	-10.4	H	3.0	35.4	1.0	-44.7	-25.0	-19.7	
Mid Channel (2535MHz)									
5.070	-16.0	V	3.0	34.7	1.0	-49.8	-25.0	-24.8	
7.605	-14.1	V	3.0	34.9	1.0	-48.0	-25.0	-23.0	
10.122	-9.5	V	3.0	35.3	1.0	-43.8	-25.0	-18.8	
5.070	-14.7	H	3.0	34.7	1.0	-48.4	-25.0	-23.4	
7.605	-12.5	H	3.0	34.9	1.0	-46.5	-25.0	-21.5	
10.122	-11.1	H	3.0	35.3	1.0	-45.4	-25.0	-20.4	
High Channel (2562.5MHz)									
5.130	-16.4	V	3.0	34.7	1.0	-50.2	-25.0	-25.2	
7.689	-12.2	V	3.0	35.0	1.0	-46.2	-25.0	-21.2	
10.260	-10.1	V	3.0	35.2	1.0	-44.3	-25.0	-19.3	
5.130	-14.1	H	3.0	34.7	1.0	-47.8	-25.0	-22.8	
7.689	-12.6	H	3.0	35.0	1.0	-46.6	-25.0	-21.6	
10.260	-11.3	H	3.0	35.2	1.0	-45.5	-25.0	-20.5	

Rev. 03.03.09
Note: No other emissions were detected above the system noise floor.

UL VERIFICATION SERVICES INC. FORM NO: CCSUP4701I
47173 BENICIA STREET, FREMONT, CA 94538, USA TEL: (510) 771-1000 FAX: (510) 661-0888

This report shall not be reproduced except in full, without the written approval of UL Verification Services Inc.

Band

LTE7

15MHz

QPSK

UL Verification Services
Above 1GHz High Frequency Substitution Measurement

Company: LG
Project #: 14U18112
Date: 06/27/14
Test Engineer: Bob Liu
Configuration: EUT with AC charger
Mode: TX, LTE BAND 7, 15MHz BW, QPSK

Chamber	Pre-amplifer	Filter	Limit
3m Chamber	T34 8449B	Filter 1	FCC Part 27

f GHz	SG reading (dBm)	Ant. Pol. (H/V)	Distance (m)	Preamp (dB)	Filter (dB)	ERP (dBm)	Limit (dBm)	Delta (dB)	Notes
Low Channel (2507.5MHz)									
5.010	-8.7	V	3.0	34.8	1.0	-42.5	-25.0	-17.5	
7.515	-14.3	V	3.0	34.9	1.0	-48.2	-25.0	-23.2	
10.020	-10.9	V	3.0	35.4	1.0	-45.2	-25.0	-20.2	
5.010	-11.9	H	3.0	34.8	1.0	-45.7	-25.0	-20.7	
7.515	-11.9	H	3.0	34.9	1.0	-45.9	-25.0	-20.9	
10.020	-11.4	H	3.0	35.4	1.0	-45.8	-25.0	-20.8	
Mid Channel (2535MHz)									
5.070	-16.2	V	3.0	34.7	1.0	-49.9	-25.0	-24.9	
7.605	-13.3	V	3.0	34.9	1.0	-47.3	-25.0	-22.3	
10.122	-10.7	V	3.0	35.3	1.0	-45.0	-25.0	-20.0	
5.070	-16.0	H	3.0	34.7	1.0	-49.8	-25.0	-24.8	
7.605	-12.2	H	3.0	34.9	1.0	-46.2	-25.0	-21.2	
10.122	-10.6	H	3.0	35.3	1.0	-44.9	-25.0	-19.9	
High Channel (2562.5MHz)									
5.130	-17.7	V	3.0	34.7	1.0	-51.4	-25.0	-26.4	
7.689	-11.9	V	3.0	35.0	1.0	-45.8	-25.0	-20.8	
10.260	-10.5	V	3.0	35.2	1.0	-44.7	-25.0	-19.7	
5.130	-14.6	H	3.0	34.7	1.0	-48.4	-25.0	-23.4	
7.689	-12.1	H	3.0	35.0	1.0	-46.0	-25.0	-21.0	
10.260	-10.4	H	3.0	35.2	1.0	-44.6	-25.0	-19.6	

Rev. 03.03.09
Note: No other emissions were detected above the system noise floor.

UL VERIFICATION SERVICES INC. FORM NO: CCSUP4701I
47173 BENICIA STREET, FREMONT, CA 94538, USA TEL: (510) 771-1000 FAX: (510) 661-0888

This report shall not be reproduced except in full, without the written approval of UL Verification Services Inc.

Band

LTE7

10MHz

16QAM

UL Verification Services
Above 1GHz High Frequency Substitution Measurement

Company: LG
Project #: 14U17493
Date: 06/27/14
Test Engineer: Bob Liu
Configuration: EUT with AC charger
Mode: TX, LTE BAND 7, 10MHz BW,16QAM

Chamber	Pre-amplifer	Filter	Limit
3m Chamber	T34 8449B	Filter 1	FCC Part 27

f GHz	SG reading (dBm)	Ant. Pol. (H/V)	Distance (m)	Preamp (dB)	Filter (dB)	ERP (dBm)	Limit (dBm)	Delta (dB)	Notes
Low Channel (2505MHz)									
5.010	-14.3	V	3.0	34.8	1.0	-48.1	-25.0	-23.1	
7.515	-13.2	V	3.0	34.9	1.0	-47.2	-25.0	-22.2	
10.020	-11.1	V	3.0	35.4	1.0	-45.5	-25.0	-20.5	
5.010	-11.0	H	3.0	34.8	1.0	-44.8	-25.0	-19.8	
7.515	-13.0	H	3.0	34.9	1.0	-47.0	-25.0	-22.0	
10.020	-10.6	H	3.0	35.4	1.0	-44.9	-25.0	-19.9	
Mid Channel (2535MHz)									
5.070	-12.0	V	3.0	34.7	1.0	-45.7	-25.0	-20.7	
7.605	-13.7	V	3.0	34.9	1.0	-47.7	-25.0	-22.7	
10.122	-11.1	V	3.0	35.3	1.0	-45.4	-25.0	-20.4	
5.070	-11.5	H	3.0	34.7	1.0	-45.2	-25.0	-20.2	
7.605	-11.8	H	3.0	34.9	1.0	-45.7	-25.0	-20.7	
10.122	-10.4	H	3.0	35.3	1.0	-44.7	-25.0	-19.7	
High Channel (2565MHz)									
5.130	-16.6	V	3.0	34.7	1.0	-50.3	-25.0	-25.3	
7.689	-12.6	V	3.0	35.0	1.0	-46.5	-25.0	-21.5	
10.260	-11.3	V	3.0	35.2	1.0	-45.5	-25.0	-20.5	
5.130	-14.3	H	3.0	34.7	1.0	-48.0	-25.0	-23.0	
7.689	-11.6	H	3.0	35.0	1.0	-45.6	-25.0	-20.6	
10.260	-9.8	H	3.0	35.2	1.0	-44.0	-25.0	-19.0	

Rev. 03.03.09
Note: No other emissions were detected above the system noise floor.

UL VERIFICATION SERVICES INC. FORM NO: CCSUP4701I
47173 BENICIA STREET, FREMONT, CA 94538, USA TEL: (510) 771-1000 FAX: (510) 661-0888

This report shall not be reproduced except in full, without the written approval of UL Verification Services Inc.

Band

LTE7

10MHz

QPSK

UL Verification Services
Above 1GHz High Frequency Substitution Measurement

Company: LG
Project #: 14U17493
Date: 06/27/14
Test Engineer: Bob Liu
Configuration: EUT with AC charger
Mode: TX, LTE BAND 7, 10MHz BW,QPSK

Chamber	Pre-amplifer	Filter	Limit
3m Chamber	T34 8449B	Filter 1	FCC Part 27

f GHz	SG reading (dBm)	Ant. Pol. (H/V)	Distance (m)	Preamp (dB)	Filter (dB)	ERP (dBm)	Limit (dBm)	Delta (dB)	Notes
Low Channel (2505MHz)									
5.010	-13.1	V	3.0	34.8	1.0	-46.9	-25.0	-21.9	
7.515	-13.4	V	3.0	34.9	1.0	-47.4	-25.0	-22.4	
10.020	-10.0	V	3.0	35.4	1.0	-44.3	-25.0	-19.3	
5.010	-10.0	H	3.0	34.8	1.0	-43.7	-25.0	-18.7	
7.515	-12.7	H	3.0	34.9	1.0	-46.6	-25.0	-21.6	
10.020	-9.8	H	3.0	35.4	1.0	-44.2	-25.0	-19.2	
Mid Channel (2535MHz)									
5.070	-11.8	V	3.0	34.7	1.0	-45.5	-25.0	-20.5	
7.605	-13.5	V	3.0	34.9	1.0	-47.5	-25.0	-22.5	
10.122	-12.2	V	3.0	35.3	1.0	-46.5	-25.0	-21.5	
5.070	-11.8	H	3.0	34.7	1.0	-45.6	-25.0	-20.6	
7.605	-12.7	H	3.0	34.9	1.0	-46.6	-25.0	-21.6	
10.122	-10.0	H	3.0	35.3	1.0	-44.3	-25.0	-19.3	
High Channel (2565MHz)									
5.130	-16.5	V	3.0	34.7	1.0	-50.2	-25.0	-25.2	
7.689	-11.6	V	3.0	35.0	1.0	-45.6	-25.0	-20.6	
10.260	-10.9	V	3.0	35.2	1.0	-45.2	-25.0	-20.2	
5.130	-13.4	H	3.0	34.7	1.0	-47.2	-25.0	-22.2	
7.689	-11.4	H	3.0	35.0	1.0	-45.4	-25.0	-20.4	
10.260	-9.8	H	3.0	35.2	1.0	-44.1	-25.0	-19.1	

Rev. 03.03.09
Note: No other emissions were detected above the system noise floor.

UL VERIFICATION SERVICES INC. FORM NO: CCSUP4701I
47173 BENICIA STREET, FREMONT, CA 94538, USA TEL: (510) 771-1000 FAX: (510) 661-0888

This report shall not be reproduced except in full, without the written approval of UL Verification Services Inc.

Band

LTE7

5MHz

16QAM

UL Verification Services
Above 1GHz High Frequency Substitution Measurement

Company: LG
Project #: 14U17493
Date: 06/27/14
Test Engineer: Bob Liu
Configuration: EUT with AC charger
Mode: TX, LTE BAND 7, 5MHz BW,16QAM

Chamber	Pre-amplifer	Filter	Limit
3m Chamber	T145 8449B	Filter 1	FCC Part 27

f GHz	SG reading (dBm)	Ant. Pol. (H/V)	Distance (m)	Preamp (dB)	Filter (dB)	ERP (dBm)	Limit (dBm)	Delta (dB)	Notes
Low Channel (2502.5MHz)									
5.005	-9.6	V	3.0	35.3	1.0	-43.9	-25.0	-18.9	
7.508	-12.4	V	3.0	35.7	1.0	-47.1	-25.0	-22.1	
10.010	-10.9	V	3.0	35.5	1.0	-45.5	-25.0	-20.5	
5.005	-8.6	H	3.0	35.3	1.0	-42.9	-25.0	-17.9	
7.508	-12.1	H	3.0	35.7	1.0	-46.8	-25.0	-21.8	
10.010	-10.2	H	3.0	35.5	1.0	-44.7	-25.0	-19.7	
Mid Channel (2535MHz)									
5.070	-15.7	V	3.0	35.3	1.0	-50.1	-25.0	-25.1	
7.605	-13.7	V	3.0	35.7	1.0	-48.4	-25.0	-23.4	
10.140	-11.3	V	3.0	35.4	1.0	-45.7	-25.0	-20.7	
5.007	-11.7	H	3.0	35.3	1.0	-46.0	-25.0	-21.0	
7.605	-12.6	H	3.0	35.7	1.0	-47.3	-25.0	-22.3	
10.140	-10.9	H	3.0	35.4	1.0	-45.3	-25.0	-20.3	
High Channel (2567.5MHz)									
5.135	-12.4	V	3.0	35.3	1.0	-46.7	-25.0	-21.7	
7.703	-12.2	V	3.0	35.7	1.0	-46.8	-25.0	-21.8	
10.270	-11.3	V	3.0	35.3	1.0	-45.6	-25.0	-20.6	
5.135	-9.7	H	3.0	35.3	1.0	-44.1	-25.0	-19.1	
7.703	-11.4	H	3.0	35.7	1.0	-46.1	-25.0	-21.1	
10.270	-10.7	H	3.0	35.3	1.0	-45.0	-25.0	-20.0	

Rev. 03.03.09
Note: No other emissions were detected above the system noise floor.

UL VERIFICATION SERVICES INC. FORM NO: CCSUP4701I
47173 BENICIA STREET, FREMONT, CA 94538, USA TEL: (510) 771-1000 FAX: (510) 661-0888

This report shall not be reproduced except in full, without the written approval of UL Verification Services Inc.

Band

LTE7

5MHz

QPSK

UL Verification Services
Above 1GHz High Frequency Substitution Measurement

Company: LG
Project #: 14U17493
Date: 06/27/14
Test Engineer: Bob Liu
Configuration: EUT with AC charger
Mode: TX, LTE BAND 7, 5MHz BW,QPSK

Chamber	Pre-amplifer	Filter	Limit
3m Chamber	T145 8449B	Filter 1	FCC Part 27

f GHz	SG reading (dBm)	Ant. Pol. (H/V)	Distance (m)	Preamp (dB)	Filter (dB)	ERP (dBm)	Limit (dBm)	Delta (dB)	Notes
Low Channel (2502.5MHz)									
5.005	-13.6	V	3.0	35.3	1.0	-48.0	-25.0	-23.0	
7.508	-13.1	V	3.0	35.7	1.0	-47.8	-25.0	-22.8	
10.010	-12.1	V	3.0	35.5	1.0	-46.6	-25.0	-21.6	
5.005	-13.7	H	3.0	35.3	1.0	-48.0	-25.0	-23.0	
7.508	-12.8	H	3.0	35.7	1.0	-47.5	-25.0	-22.5	
10.010	-11.0	H	3.0	35.5	1.0	-45.5	-25.0	-20.5	
Mid Channel (2535MHz)									
5.007	-14.2	V	3.0	35.3	1.0	-48.5	-25.0	-23.5	
7.605	-13.5	V	3.0	35.7	1.0	-48.2	-25.0	-23.2	
10.140	-10.5	V	3.0	35.4	1.0	-44.9	-25.0	-19.9	
5.007	-11.0	H	3.0	35.3	1.0	-45.3	-25.0	-20.3	
7.605	-12.2	H	3.0	35.7	1.0	-46.9	-25.0	-21.9	
10.140	-11.2	H	3.0	35.4	1.0	-45.6	-25.0	-20.6	
High Channel (2567.5MHz)									
5.135	-12.1	V	3.0	35.3	1.0	-46.4	-25.0	-21.4	
7.703	-12.6	V	3.0	35.7	1.0	-47.3	-25.0	-22.3	
10.270	-10.8	V	3.0	35.3	1.0	-45.2	-25.0	-20.2	
5.135	-9.5	H	3.0	35.3	1.0	-43.9	-25.0	-18.9	
7.703	-11.3	H	3.0	35.7	1.0	-46.0	-25.0	-21.0	
10.270	-9.8	H	3.0	35.3	1.0	-44.2	-25.0	-19.2	

Rev. 03.03.09
Note: No other emissions were detected above the system noise floor.

UL VERIFICATION SERVICES INC. FORM NO: CCSUP4701I
47173 BENICIA STREET, FREMONT, CA 94538, USA TEL: (510) 771-1000 FAX: (510) 661-0888

This report shall not be reproduced except in full, without the written approval of UL Verification Services Inc.

Compliance Certification Services
Above 1GHz High Frequency Substitution Measurement

Company: LG
Project #: 14U18112
Date: 06/27/14
Test Engineer: N. Sheridan
Configuration: EUT with AC charger and Headset
Mode: TX, LTE BAND 5, 10MHz BW,16QAM

Chamber	Pre-amplifer	Filter	Limit
3m Chamber	T34 8449B	Filter 1	

Band
LTE5
10MHz
16QAM

f GHz	SG reading (dBm)	Ant. Pol. (H/V)	Distance (m)	Preamp (dB)	Filter (dB)	EIRP (dBm)	Limit (dBm)	Delta (dB)	Notes
Low Channel (829MHz)									
1.658	-23.4	V	3.0	37.4	1.0	-59.8	-13.0	-46.8	
2.487	-23.8	V	3.0	36.4	1.0	-59.1	-13.0	-46.1	
3.316	-20.2	V	3.0	35.8	1.0	-54.9	-13.0	-41.9	
1.658	-24.0	H	3.0	37.4	1.0	-60.4	-13.0	-47.4	
2.487	-29.8	H	3.0	36.4	1.0	-65.2	-13.0	-52.2	
3.316	-26.0	H	3.0	35.8	1.0	-60.7	-13.0	-47.7	
Mid Channel (836.5MHz)									
1.673	-20.1	V	3.0	37.3	1.0	-56.4	-13.0	-43.4	
2.509	-23.2	V	3.0	36.4	1.0	-58.5	-13.0	-45.5	
3.346	-22.2	V	3.0	35.8	1.0	-56.9	-13.0	-43.9	
1.673	-16.4	H	3.0	37.3	1.0	-52.8	-13.0	-39.8	
2.509	-24.9	H	3.0	36.4	1.0	-60.3	-13.0	-47.3	
3.346	-21.9	H	3.0	35.8	1.0	-56.6	-13.0	-43.6	
High Channel (844MHz)									
1.688	-18.0	V	3.0	37.3	1.0	-54.4	-13.0	-41.4	
2.532	-18.6	V	3.0	36.3	1.0	-54.0	-13.0	-41.0	
3.376	-22.1	V	3.0	35.7	1.0	-56.8	-13.0	-43.8	
1.688	-21.0	H	3.0	37.3	1.0	-57.3	-13.0	-44.3	
2.532	-16.8	H	3.0	36.3	1.0	-52.1	-13.0	-39.1	
3.376	-22.3	H	3.0	35.7	1.0	-57.0	-13.0	-44.0	

Rev. 03.03.09
Note: No other emissions were detected above the system noise floor.

UL VERIFICATION SERVICES INC. FORM NO: CCSUP4701I
47173 BENICIA STREET, FREMONT, CA 94538, USA TEL: (510) 771-1000 FAX: (510) 661-0888

This report shall not be reproduced except in full, without the written approval of UL Verification Services Inc.

Compliance Certification Services
Above 1GHz High Frequency Substitution Measurement

Company: LG
Project #: 14U18112
Date: 06/27/14
Test Engineer: N. Sheridan
Configuration: EUT with AC charger and Headset
Mode: TX, LTE BAND 5, 10MHz BW,QPSK

Chamber	Pre-amplifer	Filter	Limit
3m Chamber	T34 8449B	Filter 1	

Band
LTE5
10MHz
QPSK

f GHz	SG reading (dBm)	Ant. Pol. (H/V)	Distance (m)	Preamp (dB)	Filter (dB)	EIRP (dBm)	Limit (dBm)	Delta (dB)	Notes
Low Channel (829MHz)									
1.658	-22.6	V	3.0	37.4	1.0	-59.0	-13.0	-46.0	
2.487	-24.0	V	3.0	36.4	1.0	-59.4	-13.0	-46.4	
3.316	-20.7	V	3.0	35.8	1.0	-55.4	-13.0	-42.4	
1.658	-23.3	H	3.0	37.4	1.0	-59.7	-13.0	-46.7	
2.487	-29.1	H	3.0	36.4	1.0	-64.5	-13.0	-51.5	
3.316	-24.9	H	3.0	35.8	1.0	-59.7	-13.0	-46.7	
Mid Channel (836.5MHz)									
1.673	-19.9	V	3.0	37.3	1.0	-56.3	-13.0	-43.3	
2.509	-21.7	V	3.0	36.4	1.0	-57.1	-13.0	-44.1	
3.346	-21.5	V	3.0	35.8	1.0	-56.2	-13.0	-43.2	
1.673	-16.1	H	3.0	37.3	1.0	-52.4	-13.0	-39.4	
2.509	-24.1	H	3.0	36.4	1.0	-59.4	-13.0	-46.4	
3.346	-22.1	H	3.0	35.8	1.0	-56.9	-13.0	-43.9	
High Channel (844MHz)									
1.688	-19.1	V	3.0	37.3	1.0	-55.4	-13.0	-42.4	
2.532	-25.0	V	3.0	36.3	1.0	-60.4	-13.0	-47.4	
3.376	-25.9	V	3.0	35.7	1.0	-60.6	-13.0	-47.6	
1.688	-19.2	H	3.0	37.3	1.0	-55.5	-13.0	-42.5	
2.532	99.2	H	3.0	36.3	1.0	63.9	-13.0	76.9	
3.376	-22.3	H	3.0	35.7	1.0	-57.0	-13.0	-44.0	

Rev. 03.03.09
Note: No other emissions were detected above the system noise floor.

UL VERIFICATION SERVICES INC. FORM NO: CCSUP4701I
47173 BENICIA STREET, FREMONT, CA 94538, USA TEL: (510) 771-1000 FAX: (510) 661-0888

This report shall not be reproduced except in full, without the written approval of UL Verification Services Inc.

Compliance Certification Services
Above 1GHz High Frequency Substitution Measurement

Company: LG
Project #: 14U18112
Date: 06/27/14
Test Engineer: N. Sheridan
Configuration: EUT with AC charger
Mode: TX, LTE BAND 5, 5MHz BW,16QAM

Chamber	Pre-amplifer	Filter	Limit
3m Chamber	T34 8449B	Filter 1	

Band
LTE5
5MHz
16QAM

f GHz	SG reading (dBm)	Ant. Pol. (H/V)	Distance (m)	Preamp (dB)	Filter (dB)	EIRP (dBm)	Limit (dBm)	Delta (dB)	Notes
Low Channel (826.5MHz)									
1.653	-21.1	V	3.0	37.4	1.0	-57.4	-13.0	-44.4	
2.479	-27.1	V	3.0	36.4	1.0	-62.5	-13.0	-49.5	
3.306	-23.4	V	3.0	35.8	1.0	-58.2	-13.0	-45.2	
1.653	-18.5	H	3.0	37.4	1.0	-54.9	-13.0	-41.9	
2.479	-19.9	H	3.0	36.4	1.0	-55.3	-13.0	-42.3	
3.306	-21.7	H	3.0	35.8	1.0	-56.5	-13.0	-43.5	
Mid Channel (836.5MHz)									
1.673	-16.4	V	3.0	37.3	1.0	-52.7	-13.0	-39.7	
2.509	-24.9	V	3.0	36.4	1.0	-60.3	-13.0	-47.3	
3.346	-24.4	V	3.0	35.8	1.0	-59.2	-13.0	-46.2	
1.673	-12.3	H	3.0	37.3	1.0	-48.6	-13.0	-35.6	
2.509	-24.0	H	3.0	36.4	1.0	-59.4	-13.0	-46.4	
3.346	-22.0	H	3.0	35.8	1.0	-56.8	-13.0	-43.8	
High Channel (846.5MHz)									
1.693	-16.2	V	3.0	37.3	1.0	-52.6	-13.0	-39.6	
2.539	-27.0	V	3.0	36.3	1.0	-62.4	-13.0	-49.4	
3.386	-24.5	V	3.0	35.7	1.0	-59.2	-13.0	-46.2	
1.693	-18.3	H	3.0	37.3	1.0	-54.6	-13.0	-41.6	
2.539	-22.0	H	3.0	36.3	1.0	-57.4	-13.0	-44.4	
3.386	-21.8	H	3.0	35.7	1.0	-56.5	-13.0	-43.5	

Rev. 03.03.09
Note: No other emissions were detected above the system noise floor.

UL VERIFICATION SERVICES INC. FORM NO: CCSUP4701I
47173 BENICIA STREET, FREMONT, CA 94538, USA TEL: (510) 771-1000 FAX: (510) 661-0888

This report shall not be reproduced except in full, without the written approval of UL Verification Services Inc.

Compliance Certification Services
Above 1GHz High Frequency Substitution Measurement

Company: LG
Project #: 14U18112
Date: 06/27/14
Test Engineer: N. Sheridan
Configuration: EUT with AC charger
Mode: TX, LTE BAND 5, 5MHz BW,QPSK

Chamber	Pre-amplifer	Filter	Limit
3m Chamber	T34 8449B	Filter 1	

Band
LTE5
5MHz
QPSK

f GHz	SG reading (dBm)	Ant. Pol. (H/V)	Distance (m)	Preamp (dB)	Filter (dB)	EIRP (dBm)	Limit (dBm)	Delta (dB)	Notes
Low Channel (826.5MHz)									
1.653	-19.8	V	3.0	37.4	1.0	-56.2	-13.0	-43.2	
2.479	-26.6	V	3.0	36.4	1.0	-62.0	-13.0	-49.0	
3.306	-24.1	V	3.0	35.8	1.0	-58.9	-13.0	-45.9	
1.653	-18.5	H	3.0	37.4	1.0	-54.8	-13.0	-41.8	
2.479	-21.1	H	3.0	36.4	1.0	-56.5	-13.0	-43.5	
3.306	-22.0	H	3.0	35.8	1.0	-56.8	-13.0	-43.8	
Mid Channel (836.5MHz)									
1.673	-15.7	V	3.0	37.3	1.0	-52.0	-13.0	-39.0	
2.509	-24.7	V	3.0	36.4	1.0	-60.1	-13.0	-47.1	
3.346	-23.9	V	3.0	35.8	1.0	-58.7	-13.0	-45.7	
1.673	-12.6	H	3.0	37.3	1.0	-48.9	-13.0	-35.9	
2.509	-25.3	H	3.0	36.4	1.0	-60.6	-13.0	-47.6	
3.346	-22.1	H	3.0	35.8	1.0	-56.8	-13.0	-43.8	
High Channel (846.5MHz)									
1.693	-16.9	V	3.0	37.3	1.0	-53.2	-13.0	-40.2	
2.539	-25.5	V	3.0	36.3	1.0	-60.9	-13.0	-47.9	
3.386	-25.2	V	3.0	35.7	1.0	-59.9	-13.0	-46.9	
1.693	-18.0	H	3.0	37.3	1.0	-54.3	-13.0	-41.3	
2.539	-23.2	H	3.0	36.3	1.0	-58.6	-13.0	-45.6	
3.386	-21.4	H	3.0	35.7	1.0	-56.2	-13.0	-43.2	

Rev. 03.03.09
Note: No other emissions were detected above the system noise floor.

UL VERIFICATION SERVICES INC. FORM NO: CCSUP4701I
47173 BENICIA STREET, FREMONT, CA 94538, USA TEL: (510) 771-1000 FAX: (510) 661-0888

This report shall not be reproduced except in full, without the written approval of UL Verification Services Inc.

Compliance Certification Services
Above 1GHz High Frequency Substitution Measurement

Company: LG
Project #: 14U18112
Date: 06/27/14
Test Engineer: Kelvin Huynh
Configuration: EUT, AC charger, and Earphone
Mode: TX, LTE band 4, 10MHz BW, 16QAM

Chamber	Pre-amplifer	Filter	Limit
3m Chamber	T145 8449B	Filter 1	

Band: LTE4 10MHz 16QAM

f GHz	SG reading (dBm)	Ant. Pol. (H/V)	Distance (m)	Preamp (dB)	Filter (dB)	ERP (dBm)	Limit (dBm)	Delta (dB)	Notes
Low Ch, (1715 MHz)									
3.430	-11.9	V	3.0	30.4	1.0	-41.4	-13.0	-28.4	
5.145	-18.0	V	3.0	28.8	1.0	-45.7	-13.0	-32.7	
6.860	-13.0	V	3.0	27.1	1.0	-39.1	-13.0	-26.1	
3.430	-11.5	H	3.0	30.4	1.0	-40.9	-13.0	-27.9	
5.145	-15.9	H	3.0	28.8	1.0	-43.7	-13.0	-30.7	
6.860	-12.5	H	3.0	27.1	1.0	-38.6	-13.0	-25.6	
Mid Ch, (1732.5 MHz)									
3.465	-13.2	V	3.0	30.4	1.0	-42.6	-13.0	-29.6	
5.198	-16.9	V	3.0	28.7	1.0	-44.7	-13.0	-31.7	
6.930	-12.7	V	3.0	27.1	1.0	-38.7	-13.0	-25.7	
3.465	-14.0	H	3.0	30.4	1.0	-43.4	-13.0	-30.4	
5.198	-16.1	H	3.0	28.7	1.0	-43.8	-13.0	-30.8	
6.930	-11.6	H	3.0	27.1	1.0	-37.7	-13.0	-24.7	
High Ch, (1750 MHz)									
3.500	-13.8	V	3.0	30.4	1.0	-43.2	-13.0	-30.2	
5.250	-16.5	V	3.0	28.7	1.0	-44.1	-13.0	-31.1	
7.000	-12.3	V	3.0	27.0	1.0	-38.3	-13.0	-25.3	
3.500	-14.4	H	3.0	30.4	1.0	-43.8	-13.0	-30.8	
5.250	-16.2	H	3.0	28.7	1.0	-43.8	-13.0	-30.8	
7.000	-11.3	H	3.0	27.0	1.0	-37.3	-13.0	-24.3	

Rev. 03.03.09
Note: No other emissions were detected above the system noise floor

UL VERIFICATION SERVICES INC. FORM NO: CCSUP4701I
47173 BENICIA STREET, FREMONT, CA 94538, USA TEL: (510) 771-1000 FAX: (510) 661-0888

This report shall not be reproduced except in full, without the written approval of UL Verification Services Inc.

Compliance Certification Services
Above 1GHz High Frequency Substitution Measurement

Company: LG
Project #: 14U18112
Date: 06/27/14
Test Engineer: Kelvin Huynh
Configuration: EUT, AC charger, and Earphone
Mode: TX, LTE band 4, 10MHz BW, QPSK

Chamber	Pre-amplifer	Filter	Limit
3m Chamber	T145 8449B	Filter 1	

Band LTE4 10MHz QPSK

f GHz	SG reading (dBm)	Ant. Pol. (H/V)	Distance (m)	Preamp (dB)	Filter (dB)	ERP (dBm)	Limit (dBm)	Delta (dB)	Notes
Low Ch, (1715 MHz)									
3.430	-12.2	V	3.0	30.4	1.0	-41.7	-13.0	-28.7	
5.145	-17.3	V	3.0	28.8	1.0	-45.1	-13.0	-32.1	
6.860	-13.0	V	3.0	27.1	1.0	-39.2	-13.0	-26.2	
3.430	-11.7	H	3.0	30.4	1.0	-41.1	-13.0	-28.1	
5.145	-16.4	H	3.0	28.8	1.0	-44.1	-13.0	-31.1	
6.860	-12.6	H	3.0	27.1	1.0	-38.7	-13.0	-25.7	
Mid Ch, (1732.5 MHz)									
3.465	-12.6	V	3.0	30.4	1.0	-42.0	-13.0	-29.0	
5.198	-9.9	V	3.0	28.7	1.0	-37.6	-13.0	-24.6	
6.930	-9.7	V	3.0	27.1	1.0	-35.8	-13.0	-22.8	
3.465	-14.1	H	3.0	30.4	1.0	-43.5	-13.0	-30.5	
5.198	-16.7	H	3.0	28.7	1.0	-44.4	-13.0	-31.4	
6.930	-11.6	H	3.0	27.1	1.0	-37.7	-13.0	-24.7	
High Ch, (1750 MHz)									
3.500	-14.0	V	3.0	30.4	1.0	-43.4	-13.0	-30.4	
5.250	-16.3	V	3.0	28.7	1.0	-44.0	-13.0	-31.0	
7.000	-12.4	V	3.0	27.0	1.0	-38.4	-13.0	-25.4	
3.500	-14.5	H	3.0	30.4	1.0	-43.9	-13.0	-30.9	
5.250	-16.7	H	3.0	28.7	1.0	-44.3	-13.0	-31.3	
7.000	-11.4	H	3.0	27.0	1.0	-37.4	-13.0	-24.4	

Rev. 03.03.09
Note: No other emissions were detected above the system noise floor.

UL VERIFICATION SERVICES INC. FORM NO: CCSUP4701I
47173 BENICIA STREET, FREMONT, CA 94538, USA TEL: (510) 771-1000 FAX: (510) 661-0888

This report shall not be reproduced except in full, without the written approval of UL Verification Services Inc.

Compliance Certification Services
Above 1GHz High Frequency Substitution Measurement

Company: LG
Project #: 14U18112
Date: 06/27/14
Test Engineer: Kelvin Huynh
Configuration: EUT, AC charger, and Earphone
Mode: TX, LTE band 4, 5MHz BW, 16 QAM

Chamber	Pre-amplifer	Filter	Limit
3m Chamber	T145 8449B	Filter 1	

Band: LTE4 5MHz 16QAM

f GHz	SG reading (dBm)	Ant. Pol. (H/V)	Distance (m)	Preamp (dB)	Filter (dB)	ERP (dBm)	Limit (dBm)	Delta (dB)	Notes
Low Ch, (1712.5 MHz)									
3.425	-12.5	V	3.0	30.4	1.0	-41.9	-13.0	-28.9	
5.138	-12.7	V	3.0	28.8	1.0	-40.4	-13.0	-27.4	
6.850	-9.8	V	3.0	27.1	1.0	-36.0	-13.0	-23.0	
3.425	-13.2	H	3.0	30.4	1.0	-42.6	-13.0	-29.6	
5.138	-15.8	H	3.0	28.8	1.0	-43.6	-13.0	-30.6	
6.850	-9.9	H	3.0	27.1	1.0	-36.0	-13.0	-23.0	
Mid Ch, (1732.5 MHz)									
3.465	-13.9	V	3.0	30.4	1.0	-43.3	-13.0	-30.3	
5.198	-9.4	V	3.0	28.7	1.0	-37.1	-13.0	-24.1	
6.930	-12.7	V	3.0	27.1	1.0	-38.8	-13.0	-25.8	
3.465	-15.5	H	3.0	30.4	1.0	-44.9	-13.0	-31.9	
5.198	-12.1	H	3.0	28.7	1.0	-39.8	-13.0	-26.8	
6.930	-11.7	H	3.0	27.1	1.0	-37.8	-13.0	-24.8	
High Ch, (1752.5 MHz)									
3.505	-12.7	V	3.0	30.4	1.0	-42.1	-13.0	-29.1	
5.258	-8.1	V	3.0	28.6	1.0	-35.8	-13.0	-22.8	
7.010	-7.1	V	3.0	27.0	1.0	-33.1	-13.0	-20.1	
3.505	-13.9	H	3.0	30.4	1.0	-43.3	-13.0	-30.3	
5.258	-15.5	H	3.0	28.6	1.0	-43.2	-13.0	-30.2	
7.010	-7.9	H	3.0	27.0	1.0	-33.8	-13.0	-20.8	

Rev. 03.03.09
Note: No other emissions were detected above the system noise floor.

UL VERIFICATION SERVICES INC. FORM NO: CCSUP4701I
47173 BENICIA STREET, FREMONT, CA 94538, USA TEL: (510) 771-1000 FAX: (510) 661-0888

This report shall not be reproduced except in full, without the written approval of UL Verification Services Inc.

Compliance Certification Services
Above 1GHz High Frequency Substitution Measurement

Company: LG
Project #: 14U18112
Date: 06/27/14
Test Engineer: Kelvin Huynh
Configuration: EUT, AC charger, and Earphone
Mode: TX, LTE band 4, 5MHz BW, QPSK

Chamber	Pre-amplifer	Filter	Limit
3m Chamber	T145 8449B	Filter 1	

Band	f GHz	SG reading (dBm)	Ant. Pol. (H/V)	Distance (m)	Preamp (dB)	Filter (dB)	ERP (dBm)	Limit (dBm)	Delta (dB)	Notes
	Low Ch, (1712.5 MHz)									
LTE4	3.425	-12.4	V	3.0	30.4	1.0	-41.8	-13.0	-28.8	
	5.138	-13.2	V	3.0	28.8	1.0	-41.0	-13.0	-28.0	
5MHz	6.850	-9.0	V	3.0	27.1	1.0	-35.2	-13.0	-22.2	
	3.425	-13.1	H	3.0	30.4	1.0	-42.6	-13.0	-29.6	
QPSK	5.138	-16.7	H	3.0	28.8	1.0	-44.5	-13.0	-31.5	
	6.850	-13.0	H	3.0	27.1	1.0	-39.2	-13.0	-26.2	
	Mid Ch, (1732.5 MHz)									
	3.465	-14.1	V	3.0	30.4	1.0	-43.5	-13.0	-30.5	
	5.198	-10.8	V	3.0	28.7	1.0	-38.5	-13.0	-25.5	
	6.930	-12.7	V	3.0	27.1	1.0	-38.8	-13.0	-25.8	
	3.465	-15.5	H	3.0	30.4	1.0	-44.9	-13.0	-31.9	
	5.198	-13.4	H	3.0	28.7	1.0	-41.1	-13.0	-28.1	
	6.930	-11.6	H	3.0	27.1	1.0	-37.6	-13.0	-24.6	
	High Ch, (1752.5 MHz)									
	3.505	-12.9	V	3.0	30.4	1.0	-42.3	-13.0	-29.3	
	5.258	-8.3	V	3.0	28.6	1.0	-36.0	-13.0	-23.0	
	7.010	-7.2	V	3.0	27.0	1.0	-33.2	-13.0	-20.2	
	3.505	-13.6	H	3.0	30.4	1.0	-43.0	-13.0	-30.0	
	5.258	-14.0	H	3.0	28.6	1.0	-41.7	-13.0	-28.7	
	7.010	-7.8	H	3.0	27.0	1.0	-33.8	-13.0	-20.8	

Rev. 03.03.09
Note: No other emissions were detected above the system noise floor.

UL VERIFICATION SERVICES INC. FORM NO: CCSUP4701I
47173 BENICIA STREET, FREMONT, CA 94538, USA TEL: (510) 771-1000 FAX: (510) 661-0888

This report shall not be reproduced except in full, without the written approval of UL Verification Services Inc.

Band

LTE2

10MHz

16QAM

Compliance Certification Services
Above 1GHz High Frequency Substitution Measurement

Company: LG
Project #: 14U18112
Date: 06/27/14
Test Engineer: Bob Liu
Configuration: EUT with AC charger and headset
Mode: TX, LTE BAND 2, 10MHz BW, 16QAM

Chamber	Pre-amplifer	Filter	Limit
3m Chamber	T34 8449B	Filter 1	Part 24

f GHz	SG reading (dBm)	Ant. Pol. (H/V)	Distance (m)	Preamp (dB)	Filter (dB)	EIRP (dBm)	Limit (dBm)	Delta (dB)	Notes
Low Channel (1855 MHz)									
3.710	-28.9	V	3.0	35.4	1.0	-63.3	-13.0	-50.3	
5.565	-27.2	V	3.0	34.7	1.0	-60.9	-13.0	-47.9	
7.420	-26.0	V	3.0	34.9	1.0	-59.9	-13.0	-46.9	
3.710	-21.1	H	3.0	35.4	1.0	-55.4	-13.0	-42.4	
5.565	-18.8	H	3.0	34.7	1.0	-52.5	-13.0	-39.5	
7.420	-16.4	H	3.0	34.9	1.0	-50.3	-13.0	-37.3	
Mid Channel (1880MHz)									
3.760	-25.4	V	3.0	35.3	1.0	-59.8	-13.0	-46.8	
5.640	-27.3	V	3.0	34.7	1.0	-61.0	-13.0	-48.0	
7.520	-23.6	V	3.0	34.9	1.0	-57.5	-13.0	-44.5	
3.760	-27.4	H	3.0	35.3	1.0	-61.8	-13.0	-48.8	
5.640	-26.7	H	3.0	34.7	1.0	-60.5	-13.0	-47.5	
7.520	-23.6	H	3.0	34.9	1.0	-57.5	-13.0	-44.5	
High Channel (1905MHz)									
3.810	-20.8	V	3.0	35.3	1.0	-55.1	-13.0	-42.1	
5.715	-27.4	V	3.0	34.7	1.0	-61.1	-13.0	-48.1	
7.620	-25.4	V	3.0	34.9	1.0	-59.3	-13.0	-46.3	
3.810	-26.2	H	3.0	35.3	1.0	-60.5	-13.0	-47.5	
5.715	-23.9	H	3.0	34.7	1.0	-57.7	-13.0	-44.7	
7.620	-21.1	H	3.0	34.9	1.0	-55.0	-13.0	-42.0	

Rev. 03.03.09
Note: No other emissions were detected above the system noise floor.

UL VERIFICATION SERVICES INC. FORM NO: CCSUP4701I
47173 BENICIA STREET, FREMONT, CA 94538, USA TEL: (510) 771-1000 FAX: (510) 661-0888

This report shall not be reproduced except in full, without the written approval of UL Verification Services Inc.

Band

LTE2

10MHz

QPSK

Compliance Certification Services
Above 1GHz High Frequency Substitution Measurement

Company: LG
Project #: 14U18112
Date: 06/27/14
Test Engineer: Bob Liu
Configuration: EUT with AC charger and headset
Mode: TX, LTE BAND 2, 10MHz BW, QPSK

Chamber	Pre-amplifer	Filter	Limit
3m Chamber	T34 8449B	Filter 1	Part 24

f GHz	SG reading (dBm)	Ant. Pol. (H/V)	Distance (m)	Preamp (dB)	Filter (dB)	EIRP (dBm)	Limit (dBm)	Delta (dB)	Notes
Low Channel (1855MHz)									
3.710	-29.5	V	3.0	35.4	1.0	-63.9	-13.0	-50.9	
5.565	-27.2	V	3.0	34.7	1.0	-60.9	-13.0	-47.9	
7.420	-26.3	V	3.0	34.9	1.0	-60.2	-13.0	-47.2	
3.710	-22.1	H	3.0	35.4	1.0	-56.5	-13.0	-43.5	
5.565	-19.4	H	3.0	34.7	1.0	-53.1	-13.0	-40.1	
7.420	-18.1	H	3.0	34.9	1.0	-52.0	-13.0	-39.0	
Mid Channel (1880MHz)									
3.760	-26.1	V	3.0	35.3	1.0	-60.5	-13.0	-47.5	
5.640	-27.8	V	3.0	34.7	1.0	-61.5	-13.0	-48.5	
7.520	-25.8	V	3.0	34.9	1.0	-59.7	-13.0	-46.7	
3.760	-26.6	H	3.0	35.3	1.0	-60.9	-13.0	-47.9	
5.640	-26.7	H	3.0	34.7	1.0	-60.4	-13.0	-47.4	
7.520	-23.6	H	3.0	34.9	1.0	-57.6	-13.0	-44.6	
High Channel (1905MHz)									
3.810	-19.3	V	3.0	35.3	1.0	-53.6	-13.0	-40.6	
5.715	-27.5	V	3.0	34.7	1.0	-61.2	-13.0	-48.2	
7.620	-25.6	V	3.0	34.9	1.0	-59.6	-13.0	-46.6	
3.810	-26.1	H	3.0	35.3	1.0	-60.4	-13.0	-47.4	
5.715	-24.6	H	3.0	34.7	1.0	-58.3	-13.0	-45.3	
7.620	-21.9	H	3.0	34.9	1.0	-55.9	-13.0	-42.9	

Rev. 03.03.09
Note: No other emissions were detected above the system noise floor.

UL VERIFICATION SERVICES INC. FORM NO: CCSUP4701I
47173 BENICIA STREET, FREMONT, CA 94538, USA TEL: (510) 771-1000 FAX: (510) 661-0888

This report shall not be reproduced except in full, without the written approval of UL Verification Services Inc.

Band

LTE2

5MHz

16QAM

Compliance Certification Services
Above 1GHz High Frequency Substitution Measurement

Company: LG
Project #: 14U18112
Date: 06/27/14
Test Engineer: Bob Liu
Configuration: EUT with AC charger and headset
Mode: TX, LTE BAND 2, 10MHz BW, 16QAM

Chamber	Pre-amplifer	Filter	Limit
3m Chamber	T34 8449B	Filter 1	Part 24

f GHz	SG reading (dBm)	Ant. Pol. (H/V)	Distance (m)	Preamp (dB)	Filter (dB)	EIRP (dBm)	Limit (dBm)	Delta (dB)	Notes
Low Channel (1852.5 MHz)									
3.705	-10.8	V	3.0	35.4	1.0	-45.2	-13.0	-32.2	
5.558	-19.6	V	3.0	34.7	1.0	-53.3	-13.0	-40.3	
7.410	-6.4	V	3.0	34.9	1.0	-40.3	-13.0	-27.3	
3.705	-20.0	H	3.0	35.4	1.0	-54.4	-13.0	-41.4	
5.558	-15.2	H	3.0	34.7	1.0	-48.9	-13.0	-35.9	
7.410	-9.4	H	3.0	34.9	1.0	-43.3	-13.0	-30.3	
Mid Channel (1880MHz)									
3.760	-22.2	V	3.0	35.3	1.0	-56.5	-13.0	-43.5	
5.640	-17.1	V	3.0	34.7	1.0	-50.9	-13.0	-37.9	
7.520	-16.1	V	3.0	34.9	1.0	-50.0	-13.0	-37.0	
3.760	-21.1	H	3.0	35.3	1.0	-55.5	-13.0	-42.5	
5.640	-20.0	H	3.0	34.7	1.0	-53.7	-13.0	-40.7	
7.520	-18.9	H	3.0	34.9	1.0	-52.9	-13.0	-39.9	
High Channel (1907.5MHz)									
3.815	-21.7	V	3.0	35.3	1.0	-56.0	-13.0	-43.0	
5.723	-17.3	V	3.0	34.7	1.0	-51.0	-13.0	-38.0	
7.630	-14.3	V	3.0	34.9	1.0	-48.3	-13.0	-35.3	
3.815	-16.4	H	3.0	35.3	1.0	-50.7	-13.0	-37.7	
5.723	-13.2	H	3.0	34.7	1.0	-46.9	-13.0	-33.9	
7.630	-20.4	H	3.0	34.9	1.0	-54.4	-13.0	-41.4	

Rev. 03.03.09
Note: No other emissions were detected above the system noise floor.

UL VERIFICATION SERVICES INC. FORM NO: CCSUP4701I
47173 BENICIA STREET, FREMONT, CA 94538, USA TEL: (510) 771-1000 FAX: (510) 661-0888

This report shall not be reproduced except in full, without the written approval of UL Verification Services Inc.

Compliance Certification Services
Above 1GHz High Frequency Substitution Measurement

Company: LG
Project #: 14U18112
Date: 06/27/14
Test Engineer: Bob Liu
Configuration: EUT with AC charger and headset
Mode: TX, LTE BAND 2, 10MHz BW, QPSK

Chamber	Pre-amplifer	Filter	Limit
3m Chamber	T34 8449B	Filter 1	Part 24

Band
LTE2
5MHz
QPSK

f GHz	SG reading (dBm)	Ant. Pol. (H/V)	Distance (m)	Preamp (dB)	Filter (dB)	EIRP (dBm)	Limit (dBm)	Delta (dB)	Notes
Low Channel (1852.5MHz)									
3.705	-10.2	V	3.0	35.4	1.0	-44.6	-13.0	-31.6	
5.558	-15.5	V	3.0	34.7	1.0	-49.2	-13.0	-36.2	
7.410	-6.3	V	3.0	34.9	1.0	-40.2	-13.0	-27.2	
3.705	-20.3	H	3.0	35.4	1.0	-54.7	-13.0	-41.7	
5.558	-17.8	H	3.0	34.7	1.0	-51.5	-13.0	-38.5	
7.410	-9.3	H	3.0	34.9	1.0	-43.2	-13.0	-30.2	
Mid Channel (1880MHz)									
3.760	-21.4	V	3.0	35.3	1.0	-55.7	-13.0	-42.7	
5.640	-19.3	V	3.0	34.7	1.0	-53.0	-13.0	-40.0	
7.520	-16.3	V	3.0	34.9	1.0	-50.3	-13.0	-37.3	
3.760	-23.7	H	3.0	35.3	1.0	-58.1	-13.0	-45.1	
5.640	-24.6	H	3.0	34.7	1.0	-58.3	-13.0	-45.3	
7.520	-20.8	H	3.0	34.9	1.0	-54.8	-13.0	-41.8	
High Channel (1907.5MHz)									
3.815	-19.7	V	3.0	35.3	1.0	-54.0	-13.0	-41.0	
5.723	-16.6	V	3.0	34.7	1.0	-50.3	-13.0	-37.3	
7.630	-14.0	V	3.0	34.9	1.0	-47.9	-13.0	-34.9	
3.815	-16.7	H	3.0	35.3	1.0	-51.0	-13.0	-38.0	
5.723	-14.6	H	3.0	34.7	1.0	-48.3	-13.0	-35.3	
7.630	-20.4	H	3.0	34.9	1.0	-54.3	-13.0	-41.3	

Rev. 03.03.09
Note: No other emissions were detected above the system noise floor.

UL VERIFICATION SERVICES INC. FORM NO: CCSUP4701I
47173 BENICIA STREET, FREMONT, CA 94538, USA TEL: (510) 771-1000 FAX: (510) 661-0888

This report shall not be reproduced except in full, without the written approval of UL Verification Services Inc.

Compliance Certification Services
Above 1GHz High Frequency Substitution Measurement

Company: LG
Project #: 14U18112
Date: 06/26/14
Test Engineer: Bob Liu
Configuration: EUT with AC charger
Mode: Tx, 1900MHz HSDPA

Chamber	Pre-amplifer	Filter	Limit
3m Chamber	T34 8449B	Filter 1	Part 24

Band	f GHz	SG reading (dBm)	Ant. Pol. (H/V)	Distance (m)	Preamp (dB)	Filter (dB)	EIRP (dBm)	Limit (dBm)	Delta (dB)	Notes
	Low Ch, 1852.4MHz									
Band 2 HSDPA	3.705	-17.8	V	3.0	35.4	1.0	-52.2	-13.0	-39.2	
	5.557	-14.4	V	3.0	34.7	1.0	-48.2	-13.0	-35.2	
	7.409	-9.7	V	3.0	34.9	1.0	-43.6	-13.0	-30.6	
	3.705	-19.5	H	3.0	35.4	1.0	-53.9	-13.0	-40.9	
	5.557	-16.2	H	3.0	34.7	1.0	-50.0	-13.0	-37.0	
	7.409	-11.4	H	3.0	34.9	1.0	-45.4	-13.0	-32.4	
	Mid Ch, 1880MHz									
	3.760	-18.1	V	3.0	35.3	1.0	-52.4	-13.0	-39.4	
	5.640	-13.2	V	3.0	34.7	1.0	-46.9	-13.0	-33.9	
	7.520	-6.2	V	3.0	34.9	1.0	-40.2	-13.0	-27.2	
	3.760	-17.9	H	3.0	35.3	1.0	-52.3	-13.0	-39.3	
	5.640	-14.5	H	3.0	34.7	1.0	-48.2	-13.0	-35.2	
	7.520	-4.0	H	3.0	34.9	1.0	-37.9	-13.0	-24.9	
	High Ch, 1907.6MHz									
	3.815	-16.6	V	3.0	35.3	1.0	-50.9	-13.0	-37.9	
	5.723	-13.0	V	3.0	34.7	1.0	-46.7	-13.0	-33.7	
	7.630	-8.0	V	3.0	34.9	1.0	-42.0	-13.0	-29.0	
	3.815	-13.8	H	3.0	35.3	1.0	-48.1	-13.0	-35.1	
	5.723	-13.6	H	3.0	34.7	1.0	-47.4	-13.0	-34.4	
	7.630	-4.3	H	3.0	34.9	1.0	-38.3	-13.0	-25.3	

Rev. 03.03.09
Note: No other emissions were detected above the system noise floor.

UL VERIFICATION SERVICES INC. FORM NO: CCSUP4701I
47173 BENICIA STREET, FREMONT, CA 94538, USA TEL: (510) 771-1000 FAX: (510) 661-0888

This report shall not be reproduced except in full, without the written approval of UL Verification Services Inc.

Band

Band 2

REL99

Compliance Certification Services
Above 1GHz High Frequency Substitution Measurement

Company: LG
Project #: 14U18112
Date: 06/26/14
Test Engineer: Bob Liu
Configuration: EUT with AC charger
Mode: Tx, 1900MHz Rel 99

Chamber	Pre-amplifer	Filter	Limit
3m Chamber	T34 8449B	Filter 1	Part 24

f GHz	SG reading (dBm)	Ant. Pol. (H/V)	Distance (m)	Preamp (dB)	Filter (dB)	EIRP (dBm)	Limit (dBm)	Delta (dB)	Notes
Low Ch, 1852.4MHz									
3.705	-16.1	V	3.0	35.4	1.0	-50.5	-13.0	-37.5	
5.557	-14.0	V	3.0	34.7	1.0	-47.7	-13.0	-34.7	
7.409	-7.5	V	3.0	34.9	1.0	-41.4	-13.0	-28.4	
3.705	-16.2	H	3.0	35.4	1.0	-50.6	-13.0	-37.6	
5.557	-16.5	H	3.0	34.7	1.0	-50.2	-13.0	-37.2	
7.409	-2.9	H	3.0	34.9	1.0	-36.8	-13.0	-23.8	
Mid Ch, 1880MHz									
3.760	-15.3	V	3.0	35.3	1.0	-49.7	-13.0	-36.7	
5.640	-14.4	V	3.0	34.7	1.0	-48.1	-13.0	-35.1	
7.520	-6.1	V	3.0	34.9	1.0	-40.0	-13.0	-27.0	
3.760	-14.5	H	3.0	35.3	1.0	-48.9	-13.0	-35.9	
5.640	-13.6	H	3.0	34.7	1.0	-47.3	-13.0	-34.3	
7.520	-3.5	H	3.0	34.9	1.0	-37.4	-13.0	-24.4	
High Ch, 1907.6MHz									
3.815	-14.6	V	3.0	35.3	1.0	-48.8	-13.0	-35.8	
5.723	-13.9	V	3.0	34.7	1.0	-47.7	-13.0	-34.7	
7.630	-7.1	V	3.0	34.9	1.0	-41.1	-13.0	-28.1	
3.815	-13.0	H	3.0	35.3	1.0	-47.3	-13.0	-34.3	
5.723	-10.0	H	3.0	34.7	1.0	-43.8	-13.0	-30.8	
7.630	-5.0	H	3.0	34.9	1.0	-38.9	-13.0	-25.9	

Rev. 03.03.09
Note: No other emissions were detected above the system noise floor.

UL VERIFICATION SERVICES INC. FORM NO: CCSUP4701I
47173 BENICIA STREET, FREMONT, CA 94538, USA TEL: (510) 771-1000 FAX: (510) 661-0888

This report shall not be reproduced except in full, without the written approval of UL Verification Services Inc.

Band

Band 5

HSDPA

Compliance Certification Services
Above 1GHz High Frequency Substitution Measurement

Company: LG
Project #: 14U18112
Date: 06/27/14
Test Engineer: Kelvin Huynh
Configuration: EUT with AC charger
Mode: WCDMA_HSDPA_ 850

Chamber	Pre-amplifer	Filter	Limit
3m Chamber	T34 8449B	Filter 1	

f GHz	SG reading (dBm)	Ant. Pol. (H/V)	Distance (m)	Preamp (dB)	Filter (dB)	EIRP (dBm)	Limit (dBm)	Delta (dB)	Notes
Low Ch, 826.40MHz									
1.652	-7.6	V	3.0	37.4	1.0	-43.9	-13.0	-30.9	
2.479	-21.8	V	3.0	36.4	1.0	-57.1	-13.0	-44.1	
3.306	-20.6	V	3.0	35.8	1.0	-55.4	-13.0	-42.4	
1.652	-9.8	H	3.0	37.4	1.0	-46.2	-13.0	-33.2	
2.479	-22.0	H	3.0	36.4	1.0	-57.4	-13.0	-44.4	
3.306	-20.7	H	3.0	35.8	1.0	-55.5	-13.0	-42.5	
Mid Ch, 836.6MHz									
1.673	-8.4	V	3.0	37.3	1.0	-44.7	-13.0	-31.7	
2.510	-22.4	V	3.0	36.4	1.0	-57.7	-13.0	-44.7	
3.346	-20.4	V	3.0	35.8	1.0	-55.1	-13.0	-42.1	
1.673	-12.3	H	3.0	37.3	1.0	-48.6	-13.0	-35.6	
2.510	-22.7	H	3.0	36.4	1.0	-58.0	-13.0	-45.0	
3.346	-21.1	H	3.0	35.8	1.0	-55.8	-13.0	-42.8	
High Ch, 846.6MHz									
1.693	-11.3	V	3.0	37.3	1.0	-47.6	-13.0	-34.6	
2.539	-20.1	V	3.0	36.3	1.0	-55.4	-13.0	-42.4	
3.386	-21.4	V	3.0	35.7	1.0	-56.1	-13.0	-43.1	
1.693	-13.2	H	3.0	37.3	1.0	-49.5	-13.0	-36.5	
2.539	-24.1	H	3.0	36.3	1.0	-59.4	-13.0	-46.4	
3.386	-21.0	H	3.0	35.7	1.0	-55.7	-13.0	-42.7	

Rev. 03.03.09
Note: No other emissions were detected above the system noise floor.

UL VERIFICATION SERVICES INC. FORM NO: CCSUP4701I
47173 BENICIA STREET, FREMONT, CA 94538, USA TEL: (510) 771-1000 FAX: (510) 661-0888

This report shall not be reproduced except in full, without the written approval of UL Verification Services Inc.

Band

Band 5

REL99

Compliance Certification Services
Above 1GHz High Frequency Substitution Measurement

Company: LG
Project #: 14U18112
Date: 06/27/14
Test Engineer: Kelvin Huynh
Configuration: EUT with AC charger
Mode: WCDMA_Rel 99_ 850

Chamber	Pre-amplifer	Filter	Limit
3m Chamber	T34 8449B	Filter 1	

f GHz	SG reading (dBm)	Ant. Pol. (H/V)	Distance (m)	Preamp (dB)	Filter (dB)	EIRP (dBm)	Limit (dBm)	Delta (dB)	Notes
Low Ch, 826.40MHz									
1.652	-10.7	V	3.0	37.4	1.0	-47.1	-13.0	-34.1	
2.479	-20.2	V	3.0	36.4	1.0	-55.5	-13.0	-42.5	
3.306	-20.6	V	3.0	35.8	1.0	-55.4	-13.0	-42.4	
1.652	-10.0	H	3.0	37.4	1.0	-46.4	-13.0	-33.4	
2.479	-22.7	H	3.0	36.4	1.0	-58.1	-13.0	-45.1	
3.306	-20.5	H	3.0	35.8	1.0	-55.3	-13.0	-42.3	
Mid Ch, 836.6MHz									
1.673	-12.3	V	3.0	37.3	1.0	-48.7	-13.0	-35.7	
2.510	-20.1	V	3.0	36.4	1.0	-55.4	-13.0	-42.4	
3.346	-21.4	V	3.0	35.8	1.0	-56.1	-13.0	-43.1	
1.673	-8.3	H	3.0	37.3	1.0	-44.7	-13.0	-31.7	
2.510	-22.9	H	3.0	36.4	1.0	-58.2	-13.0	-45.2	
3.346	-21.3	H	3.0	35.8	1.0	-56.1	-13.0	-43.1	
High Ch, 846.6MHz									
1.693	-9.9	V	3.0	37.3	1.0	-46.2	-13.0	-33.2	
2.539	-21.6	V	3.0	36.3	1.0	-56.9	-13.0	-43.9	
3.386	-20.9	V	3.0	35.7	1.0	-55.6	-13.0	-42.6	
1.693	-9.5	H	3.0	37.3	1.0	-45.9	-13.0	-32.9	
2.539	-19.3	H	3.0	36.3	1.0	-54.7	-13.0	-41.7	
3.386	-20.9	H	3.0	35.7	1.0	-55.6	-13.0	-42.6	

Rev. 03.03.09
Note: No other emissions were detected above the system noise floor.

UL VERIFICATION SERVICES INC. FORM NO: CCSUP4701I
47173 BENICIA STREET, FREMONT, CA 94538, USA TEL: (510) 771-1000 FAX: (510) 661-0888

This report shall not be reproduced except in full, without the written approval of UL Verification Services Inc.

Compliance Certification Services
Above 1GHz High Frequency Substitution Measurement

Company: LG
Project #: 14U18112
Date: 06/25/14
Test Engineer: Kelvin Huynh
Configuration: EUT with AC charger
Mode: EGPRS 1900

Chamber	Pre-amplifer	Filter	Limit
3m Chamber	T343 8449B	Filter 1	Part 24

Band	f GHz	SG reading (dBm)	Ant. Pol. (H/V)	Distance (m)	Preamp (dB)	Filter (dB)	EIRP (dBm)	Limit (dBm)	Delta (dB)	Notes
	Low Ch, 1850MHz									
GSM1900	3.700	-9.6	V	3.0	35.4	1.0	-44.0	-13.0	-31.0	
	5.550	-16.8	V	3.0	34.7	1.0	-50.5	-13.0	-37.5	
	7.400	-15.3	V	3.0	34.9	1.0	-49.2	-13.0	-36.2	
EGPRS	3.700	-10.0	H	3.0	35.4	1.0	-44.4	-13.0	-31.4	
	5.550	-16.0	H	3.0	34.7	1.0	-49.8	-13.0	-36.8	
	7.400	-14.0	H	3.0	34.9	1.0	-47.9	-13.0	-34.9	
	Mid Ch, 1880.0MHz									
	3.760	-6.3	V	3.0	35.3	1.0	-40.6	-13.0	-27.6	
	5.640	-8.8	V	3.0	34.7	1.0	-42.5	-13.0	-29.5	
	7.520	-15.4	V	3.0	34.9	1.0	-49.3	-13.0	-36.3	
	3.760	-7.9	H	3.0	35.3	1.0	-42.2	-13.0	-29.2	
	5.640	-11.7	H	3.0	34.7	1.0	-45.4	-13.0	-32.4	
	7.520	-15.1	H	3.0	34.9	1.0	-49.1	-13.0	-36.1	
	High Ch, 1909.8 MHz									
	3.820	-4.5	V	3.0	35.3	1.0	-38.8	-13.0	-25.8	
	5.729	-10.9	V	3.0	34.7	1.0	-44.6	-13.0	-31.6	
	7.639	-14.0	V	3.0	35.0	1.0	-48.0	-13.0	-35.0	
	3.820	-16.9	H	3.0	35.3	1.0	-51.2	-13.0	-38.2	
	5.729	-9.3	H	3.0	34.7	1.0	-43.1	-13.0	-30.1	
	7.639	-13.2	H	3.0	35.0	1.0	-47.1	-13.0	-34.1	

Rev. 03.03.09
Note: No other emissions were detected above the system noise floor.

UL VERIFICATION SERVICES INC. FORM NO: CCSUP4701I
47173 BENICIA STREET, FREMONT, CA 94538, USA TEL: (510) 771-1000 FAX: (510) 661-0888

This report shall not be reproduced except in full, without the written approval of UL Verification Services Inc.

Compliance Certification Services
Above 1GHz High Frequency Substitution Measurement

Company: LG
Project #: 14U18112
Date: 06/25/14
Test Engineer: Kelvin Huynh
Configuration: EUT with AC charger
Mode: GPRS 1900

Chamber	Pre-amplifer	Filter	Limit
3m Chamber	T343 8449B	Filter 1	Part 24

Band	f GHz	SG reading (dBm)	Ant. Pol. (H/V)	Distance (m)	Preamp (dB)	Filter (dB)	EIRP (dBm)	Limit (dBm)	Delta (dB)	Notes
	Low Ch, 1850MHz									
GSM1 900 GPRS	3.700	-9.4	V	3.0	35.4	1.0	-43.8	-13.0	-30.8	
	5.550	-16.3	V	3.0	34.7	1.0	-50.0	-13.0	-37.0	
	7.400	-15.7	V	3.0	34.9	1.0	-49.6	-13.0	-36.6	
	3.700	-9.1	H	3.0	35.4	1.0	-43.5	-13.0	-30.5	
	5.550	-15.4	H	3.0	34.7	1.0	-49.2	-13.0	-36.2	
	7.400	-14.0	H	3.0	34.9	1.0	-47.9	-13.0	-34.9	
	Mid Ch, 1880.0MHz									
	3.760	-5.1	V	3.0	35.3	1.0	-39.4	-13.0	-26.4	
	5.640	-10.4	V	3.0	34.7	1.0	-44.1	-13.0	-31.1	
	7.520	-15.4	V	3.0	34.9	1.0	-49.3	-13.0	-36.3	
	3.760	-7.7	H	3.0	35.3	1.0	-42.1	-13.0	-29.1	
	5.640	-11.6	H	3.0	34.7	1.0	-45.4	-13.0	-32.4	
	7.520	-14.9	H	3.0	34.9	1.0	-48.9	-13.0	-35.9	
	High Ch, 1909.8 MHz									
	3.820	-4.4	V	3.0	35.3	1.0	-38.6	-13.0	-25.6	
	5.729	-11.5	V	3.0	34.7	1.0	-45.2	-13.0	-32.2	
	7.639	-15.7	V	3.0	35.0	1.0	-49.6	-13.0	-36.6	
	3.820	-15.9	H	3.0	35.3	1.0	-50.2	-13.0	-37.2	
	5.729	-9.2	H	3.0	34.7	1.0	-43.0	-13.0	-30.0	
	7.639	-14.4	H	3.0	35.0	1.0	-48.4	-13.0	-35.4	

Rev. 03.03.09
Note: No other emissions were detected above the system noise floor.

UL VERIFICATION SERVICES INC. FORM NO: CCSUP4701I
47173 BENICIA STREET, FREMONT, CA 94538, USA TEL: (510) 771-1000 FAX: (510) 661-0888

This report shall not be reproduced except in full, without the written approval of UL Verification Services Inc.

Compliance Certification Services
Above 1GHz High Frequency Substitution Measurement

Company: LG
Project #: 14U17493
Date: 04/25/14
Test Engineer: R. Alegre
Configuration: EUT with AC charger
Mode: EGPRS 850

Chamber	Pre-amplifer	Filter	Limit
3m Chamber	T34 8449B	Filter 1	

Band	f GHz	SG reading (dBm)	Ant. Pol. (H/V)	Distance (m)	Preamp (dB)	Filter (dB)	EIRP (dBm)	Limit (dBm)	Delta (dB)	Notes
	Low Ch, 824.2MHz									
GSM850	1.648	-25.8	V	3.0	37.4	1.0	-62.2	-13.0	-49.2	
	2.473	-24.1	V	3.0	36.4	1.0	-59.5	-13.0	-46.5	
	3.297	-21.8	V	3.0	35.8	1.0	-56.6	-13.0	-43.6	
EGPRS	1.648	-26.5	H	3.0	37.4	1.0	-62.9	-13.0	-49.9	
	2.473	-23.2	H	3.0	36.4	1.0	-58.6	-13.0	-45.6	
	3.297	-22.1	H	3.0	35.8	1.0	-56.9	-13.0	-43.9	
	Mid Ch, 836.6MHz									
	1.673	-28.2	V	3.0	37.3	1.0	-64.5	-13.0	-51.5	
	2.510	-24.9	V	3.0	36.4	1.0	-60.2	-13.0	-47.2	
	3.346	-22.2	V	3.0	35.8	1.0	-57.0	-13.0	-44.0	
	1.673	-26.3	H	3.0	37.3	1.0	-62.7	-13.0	-49.7	
	2.510	-26.3	H	3.0	36.4	1.0	-61.7	-13.0	-48.7	
	3.346	-22.0	H	3.0	35.8	1.0	-56.7	-13.0	-43.7	
	High Ch, 848.8MHz									
	1.698	-24.8	V	3.0	37.3	1.0	-61.1	-13.0	-48.1	
	2.547	-23.8	V	3.0	36.3	1.0	-59.2	-13.0	-46.2	
	3.395	-22.6	V	3.0	35.7	1.0	-57.3	-13.0	-44.3	
	1.698	-26.5	H	3.0	37.3	1.0	-62.8	-13.0	-49.8	
	2.547	-23.8	H	3.0	36.3	1.0	-59.2	-13.0	-46.2	
	3.395	-23.2	H	3.0	35.7	1.0	-57.9	-13.0	-44.9	

Rev. 03.03.09
Note: No other emissions were detected above the system noise floor.

UL VERIFICATION SERVICES INC. FORM NO: CCSUP4701I
47173 BENICIA STREET, FREMONT, CA 94538, USA TEL: (510) 771-1000 FAX: (510) 661-0888

This report shall not be reproduced except in full, without the written approval of UL Verification Services Inc.

Compliance Certification Services
Above 1GHz High Frequency Substitution Measurement

Company: LG
Project #: 14U17493
Date: 04/25/14
Test Engineer: R. Alegre
Configuration: EUT with AC charger
Mode: GPRS 850

Chamber	Pre-amplifer	Filter	Limit
3m Chamber	T34 8449B	Filter 1	

Band	f GHz	SG reading (dBm)	Ant. Pol. (H/V)	Distance (m)	Preamp (dB)	Filter (dB)	EIRP (dBm)	Limit (dBm)	Delta (dB)	Notes
	Low Ch, 824.2MHz									
GSM850 GPRS	1.648	-24.8	V	3.0	37.4	1.0	-61.2	-13.0	-48.2	
	2.473	-24.0	V	3.0	36.4	1.0	-59.4	-13.0	-46.4	
	3.297	-22.8	V	3.0	35.8	1.0	-57.6	-13.0	-44.6	
	1.648	-26.6	H	3.0	37.4	1.0	-63.0	-13.0	-50.0	
	2.473	-13.2	H	3.0	36.4	1.0	-48.6	-13.0	-35.6	
	3.297	-22.1	H	3.0	35.8	1.0	-56.9	-13.0	-43.9	
	Mid Ch, 836.6MHz									
	1.673	-28.1	V	3.0	37.3	1.0	-64.5	-13.0	-51.5	
	2.510	-24.8	V	3.0	36.4	1.0	-60.1	-13.0	-47.1	
	3.346	-23.1	V	3.0	35.8	1.0	-57.9	-13.0	-44.9	
	1.673	-26.2	H	3.0	37.3	1.0	-62.5	-13.0	-49.5	
	2.510	-26.1	H	3.0	36.4	1.0	-61.5	-13.0	-48.5	
	3.346	-22.0	H	3.0	35.8	1.0	-56.7	-13.0	-43.7	
	High Ch, 848.8MHz									
	1.698	-24.3	V	3.0	37.3	1.0	-60.6	-13.0	-47.6	
	2.547	-23.8	V	3.0	36.3	1.0	-59.1	-13.0	-46.1	
	3.395	-22.4	V	3.0	35.7	1.0	-57.1	-13.0	-44.1	
	1.698	-26.6	H	3.0	37.3	1.0	-62.9	-13.0	-49.9	
	2.547	-23.9	H	3.0	36.3	1.0	-59.2	-13.0	-46.2	
	3.395	-23.1	H	3.0	35.7	1.0	-57.8	-13.0	-44.8	

Rev. 03.03.09
Note: No other emissions were detected above the system noise floor.

UL VERIFICATION SERVICES INC. FORM NO: CCSUP4701I
47173 BENICIA STREET, FREMONT, CA 94538, USA TEL: (510) 771-1000 FAX: (510) 661-0888

This report shall not be reproduced except in full, without the written approval of UL Verification Services Inc.