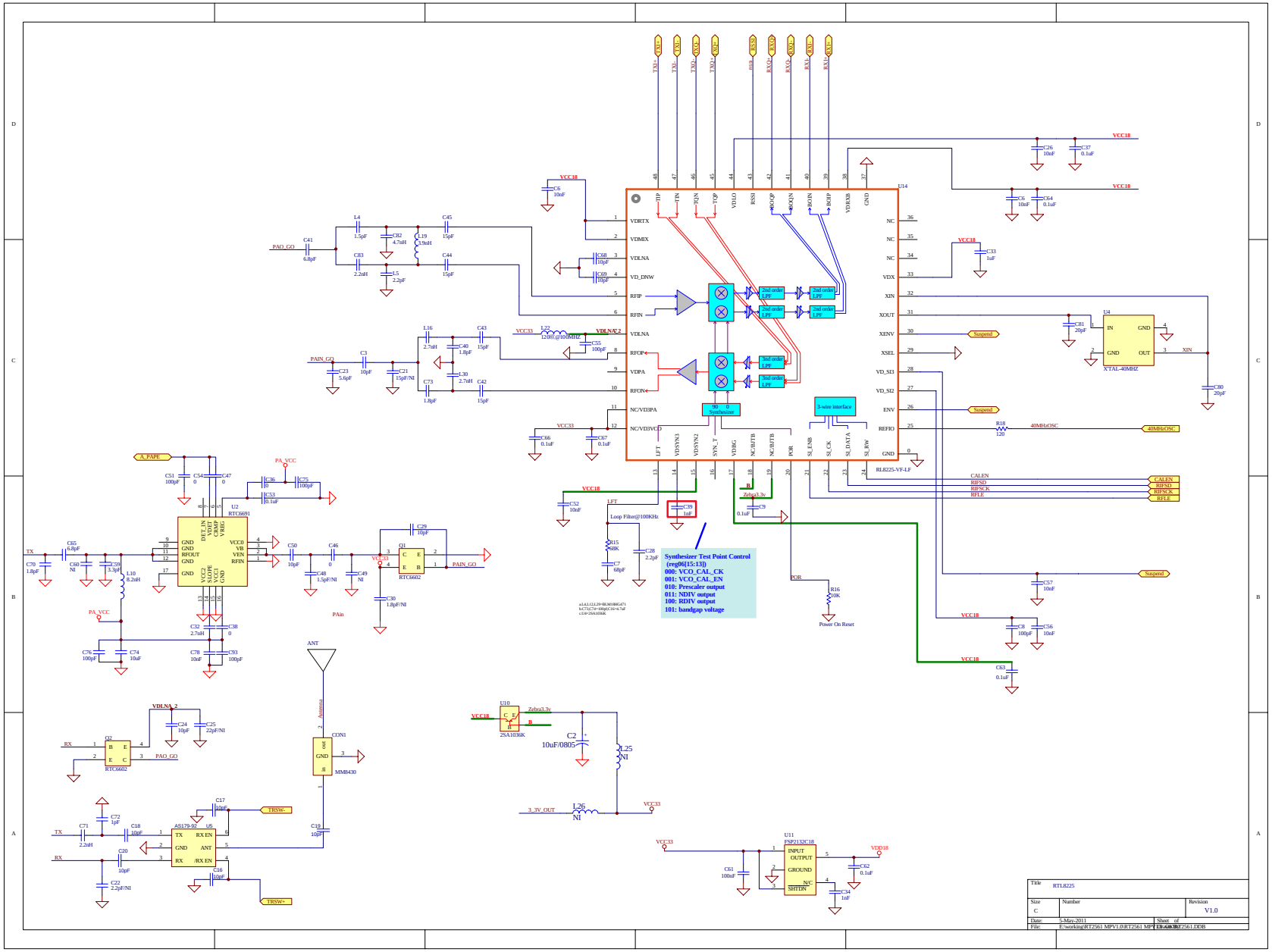
U14
RTL8225-VF-LF
U2
RTC6691
U4
XTAL-40MHZ
Q1
RTC6602
Q2
RTC6602
U10
2SA1036K
U11
FSP2132C18
U6
AS179-92
CON1
MM8430
ANT
Antenna
Synthesizer
3-wire interface
2nd order LPF
3rd order LPF
Loop Filter@100KHz
Power On Reset
Synthesizer Test Point Control
(reg06[15:13])
000: VCO_CAL_CK
001: VCO_CAL_EN
010: Prescaler output
011: NDIV output
100: RDIV output
101: bandgap voltage
VCC18
VCC33
VDD18
VDLNA_2
PA_VCC
PAin
PAIN_GO
PAO_GO
A_PAPE
TX
RX
TRSW-
TRSW+
CALEN
RIFSD
RIFSCK
RIFLE
40MHzOSC
Suspend
XIN
POR
Zebra3.3v
3_3V_OUT
LFT
TXI+
TXI-
TXQ-
TXQ+
RSSI
RXQ+
RXQ-
RXI-
RXI+
VDRTX
VDMIX
VDLNA
VD_DNW
RFIP
RFIN
RFOP
VDPA
RFON
NC/VD3PA
NC/VD3VCO
NC
VDX
XOUT
XENV
XSEL
VD_SI3
VD_SI2
ENV
REFIO
GND
VDIRB
VDIG
VDSYN3
VDSYN2
SYN_T
NC/BITB
SL_ENB
SL_CK
SL_DATA
SL_INV
L4 1.5pF
C82 4.7nH
L19 3.9nH
C45 15pF
C41 6.8pF
C83 2.2nH
L5 2.2pF
C44 15pF
C68 10pF
C69 10pF
C6 10nF
C26 10nF
C37 0.1uF
C64 0.1uF
C33 1uF
C81 20pF
C80 20pF
L16 2.7nH
C43 15pF
C40 1.8pF
L22 120R@100MHZ
C55 100pF
C3 10pF
C23 5.6pF
C21 15pF/NI
C73 1.8pF
L30 2.7nH
C42 15pF
C66 0.1uF
C67 0.1uF
C52 10uF
C39 1uF
C9 0.1uF
R15 68K
C7 68pF
C28 2.2pF
R16 10K
C57 10nF
C8 100pF
C56 10nF
C63 0.1uF
C51 100pF
C54 0
C47 0
C36 0
C75 100pF
C53 0.1uF
C65 6.8pF
C60 NI
C70 1.8pF
C59 3.3pF
L10 8.2nH
C50 10pF
C46 0
C48 1.5pF/NI
C49 NI
C29 10pF
C30 1.8pF/NI
C32 2.7nH
C38 0
C76 100pF
C74 10uF
C78 10uF
C93 100pF
C24 10pF
C25 22pF/NI
C17 10pF
C72 1pF
C71 2.2nH
C18 10pF
C20 10pF
C22 2.2pF/NI
C16 10pF
C19 10pF
C2 10uF/0805
L25 NI
L26 NI
C61 100uF
C62 0.1uF
C34 1uF
Title RTL8225
Size C
Number
Revision V1.0
Date: 5-May-2011
Sheet of
File: E:\working\RT2561 MPV1.0\RT2561 MPV1.0.DDB

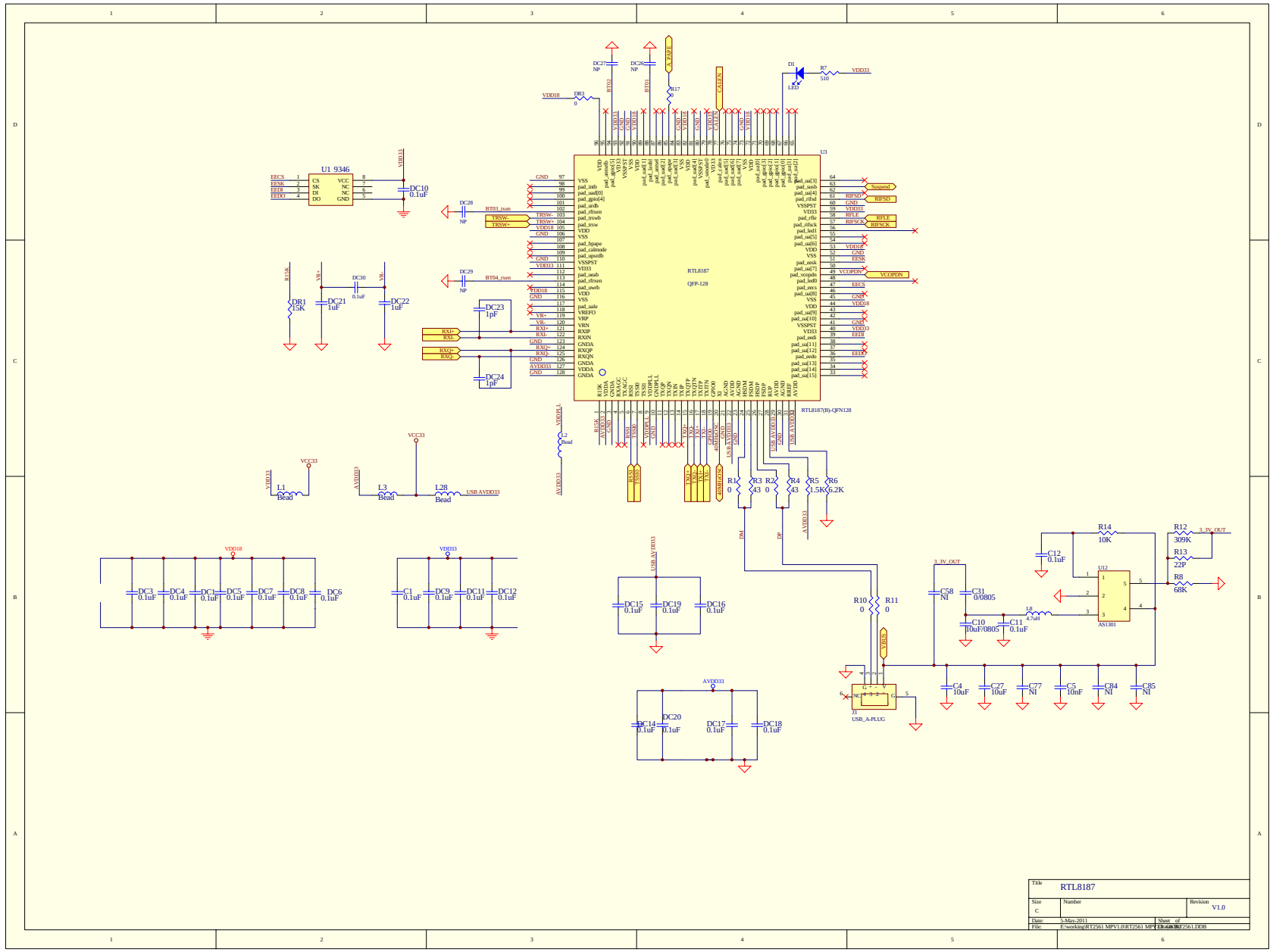

Title	RTL8187		
Size C	Number		Revision V1.0
Date: 5-May-2011		Sheet of	
File: E:\working\RT2561 MPV1.0\RT2561 MPV1.0.DDB			