Main PCB

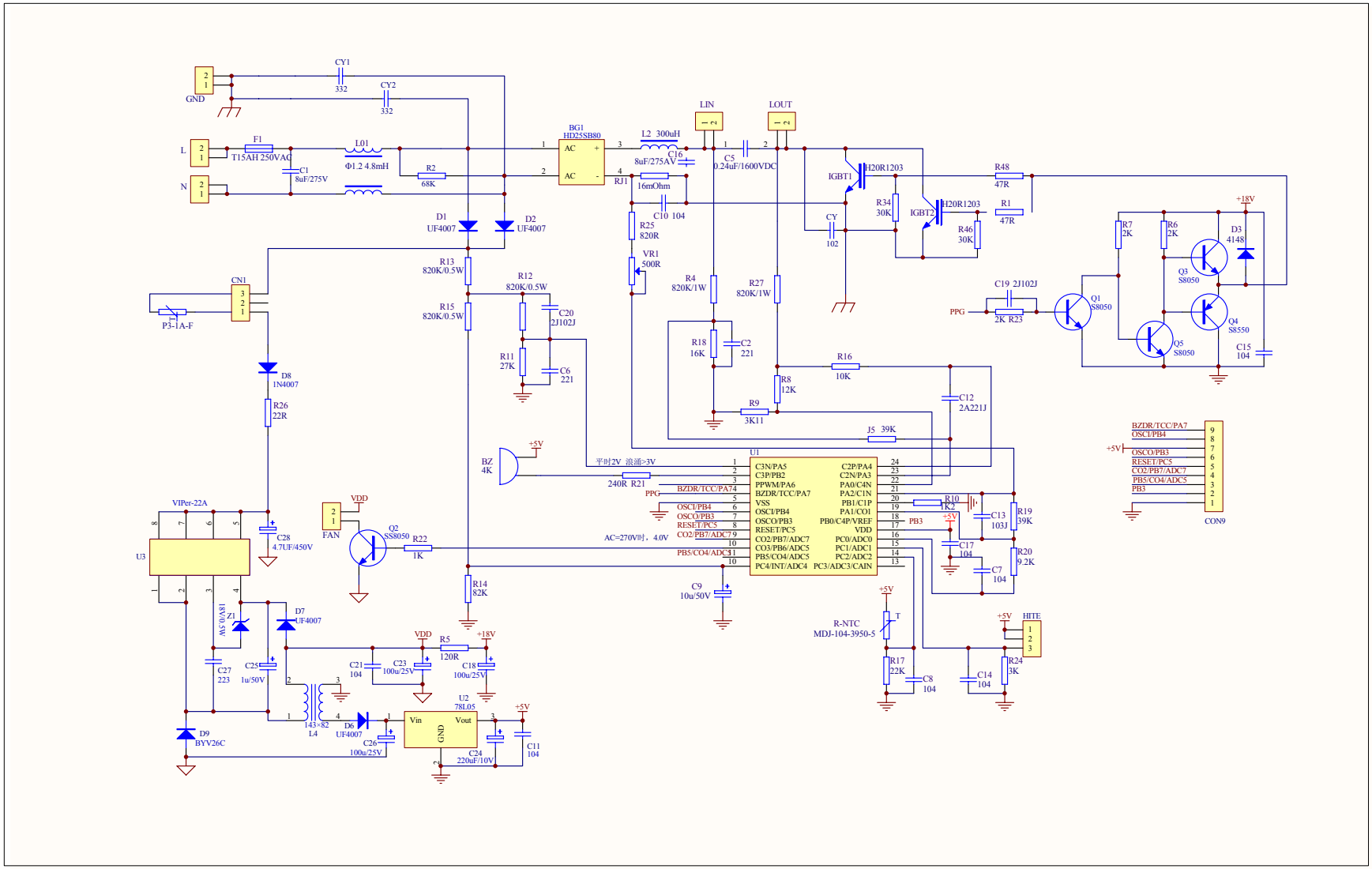
GND
CY1
332
CY2
332
L
N
F1
T15AH 250VAC
C1
8uF/275V
L01
Φ1.2 4.8mH
R2
68K
BG1
HD25SB80
AC
AC
L2 300uH
C16
8uF/275AV
RJ1
16mOhm
C10 104
R25
820R
VR1
500R
LIN
LOUT
C5
0.24uF/1600VDC
IGBT1
H20R1203
IGBT2
H20R1203
R48
47R
R1
47R
R34
30K
R46
30K
CY
102
+18V
R7
2K
R6
2K
D3
4148
Q3
S8050
Q4
S8550
Q1
S8050
Q5
S8050
C15
104
C19 2J102J
PPG
2K R23
D1
UF4007
D2
UF4007
R13
820K/0.5W
R15
820K/0.5W
R12
820K/0.5W
C20
2J102J
R11
27K
C6
221
CN1
P3-1A-F
D8
1N4007
R26
22R
R4
820K/1W
R27
820K/1W
R18
16K
C2
221
R16
10K
R8
12K
R9
3K11
C12
2A221J
J5 39K
BZ
4K
+5V
平时2V 浪涌>3V
240R R21
U1
C3N/PA5
C3P/PB2
PPWM/PA6
BZDR/TCC/PA7
VSS
OSC1/PB4
OSCO/PB3
RESET/PC5
CO2/PB7/ADC7
CO3/PB6/ADC5
PB5/CO4/ADC5
PC4/INT/ADC4
C2P/PA4
C2N/PA3
PA0/C4N
PA2/C1N
PB1/C1P
PA1/CO1
PB0/C4P/VREF
VDD
PC0/ADC0
PC1/ADC1
PC2/ADC2
PC3/ADC3/CAIN
BZDR/TCC/PA7
OSC1/PB4
OSCO/PB3
RESET/PC5
CO2/PB7/ADC7
PB5/CO4/ADC5
PB3
CON9
R10
1K2
C13
103J
R19
39K
C17
104
C7
104
R20
9.2K
PB3
AC=270V时，4.0V
VIPer-22A
U3
C28
4.7UF/450V
FAN
VDD
Q2
SS8050
R22
1K
R14
82K
C9
10u/50V
R-NTC
MDJ-104-3950-5
R17
22K
C8
104
C14
104
R24
3K
HITE
AS 0/A81
Z1
D7
UF4007
C27
223
C25
1u/50V
VDD
R5
120R
C21
104
C23
100u/25V
C18
100u/25V
U2
78L05
Vin
Vout
GND
D9
BYV26C
143×82
L4
D6
UF4007
C26
100u/25V
C24
220uF/10V
C11
104

Control PCB

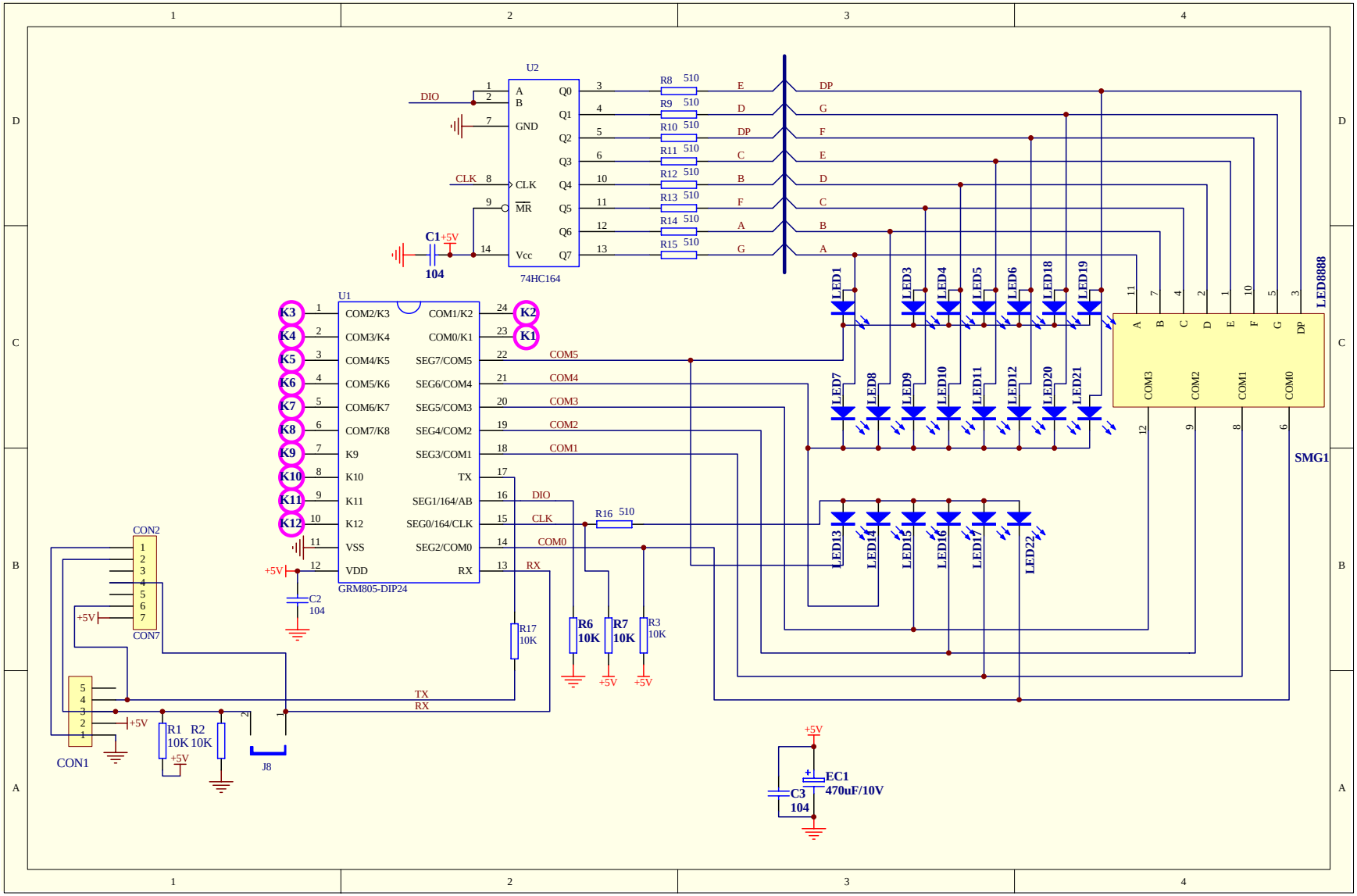
U2
74HC164
DIO
CLK
GND
MR
Vcc
C1 +5V
104
R8 510
R9 510
R10 510
R11 510
R12 510
R13 510
R14 510
R15 510
E
D
DP
C
B
F
A
G
DP
G
F
E
D
C
B
A
LED1
LED3
LED4
LED5
LED6
LED18
LED19
LED7
LED8
LED9
LED10
LED11
LED12
LED20
LED21
LED13
LED14
LED15
LED16
LED17
LED22
LED8888
SMG1
COM3
COM2
COM1
COM0
U1
GRM805-DIP24
K3
K4
K5
K6
K7
K8
K9
K10
K11
K12
K2
K1
COM2/K3
COM3/K4
COM4/K5
COM5/K6
COM6/K7
COM7/K8
K9
K10
K11
K12
VSS
VDD
COM1/K2
COM0/K1
SEG7/COM5
SEG6/COM4
SEG5/COM3
SEG4/COM2
SEG3/COM1
TX
SEG1/164/AB
SEG0/164/CLK
SEG2/COM0
RX
COM5
COM4
COM3
COM2
COM1
DIO
CLK
COM0
RX
R16 510
C2
104
R17
10K
R6
10K
R7
10K
R3
10K
CON2
CON7
CON1
R1
10K
R2
10K
J8
TX
RX
+5V
EC1
470uF/10V
C3
104