ITEM	A QTY PER	B COMCODE	C DRAWING NO.	D DESCRIPTION	E REF DES
0	1	CC848873380	CC848873380-COV	COVER , COVER OF EP120 CASE	TX03

* THIS STOCKLIST IS AUTOMATICALLY GENERATED FROM THE ASSEMBLY MODEL * MATRIX COMPATIBLE REV 2 *

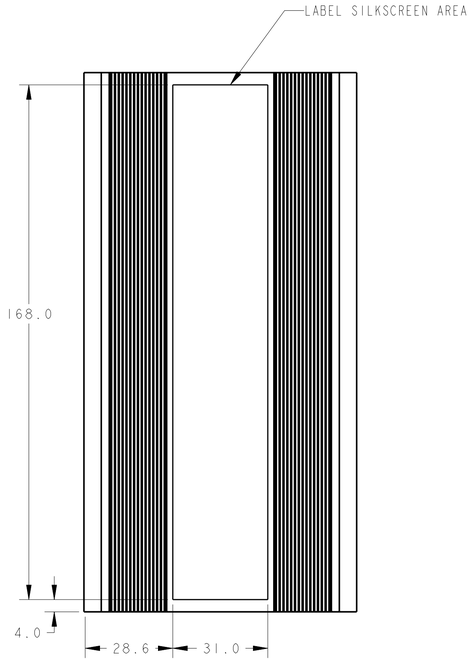

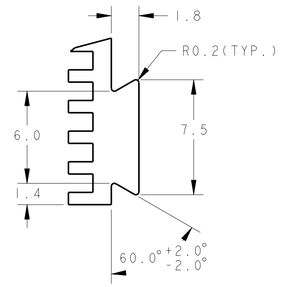

DETAIL A
SCALE 5/1

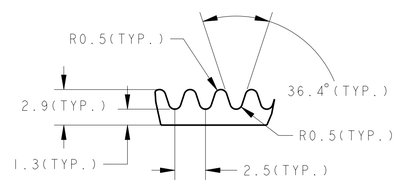

DETAIL B
SCALE 4/1

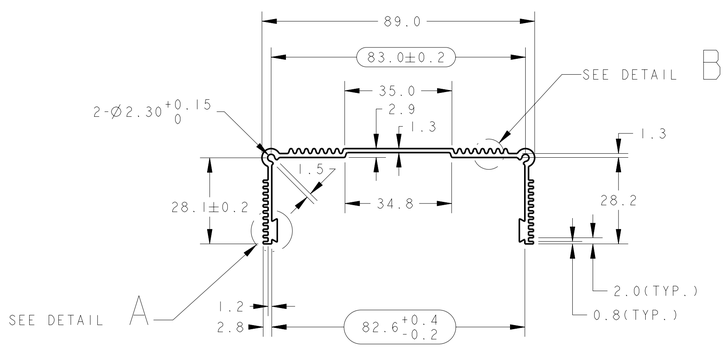

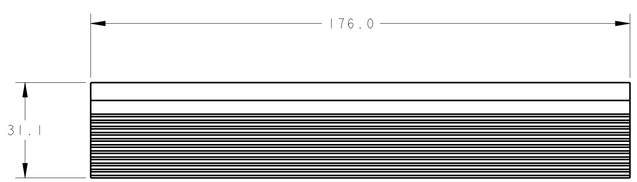

NOTES

1.
TOLERANCE:UNLESS OTHERWISE SPECIFIED THE TOLERANCE
ARE SPECIFIED AS BELLOW:
NO DECIMAL:±0.5MM
ONE DECIMAL:±0.2MM
TWO DECIMAL:±0.1MM
ANGLE:±0.5°

2.
ALUMINUM 6063 T5
PER ASTM B209.

3.
REMOVE ALL BURRS AND BREAK ALL SHARP
EDGES.

4.
FINISH:ALKALINE WASHING.

5.
SILKSCREEN:ALL ENGLISH WORDS' STYLE IS ARIAL.ALL
CHINESE WORDS' STYLE IS HEITI.
ALL WORDS' WIDTH FACTOR IS 0.85

6.
Unless otherwise specified ,all exterior surfaces must meet
the cosmetic requirements for Surface Class B, and interior
surfaces must meet Surface Class C requirements as specified
in the current revision of Lineage Power s Workmanship
Standard for Painted and Metal Plated Parts
'PS-Metal-Parts-Finish-STD .

7.
ALL DIMETIONS NEED FAI REPORT,
"⬭"DIMETION FOR CPK.

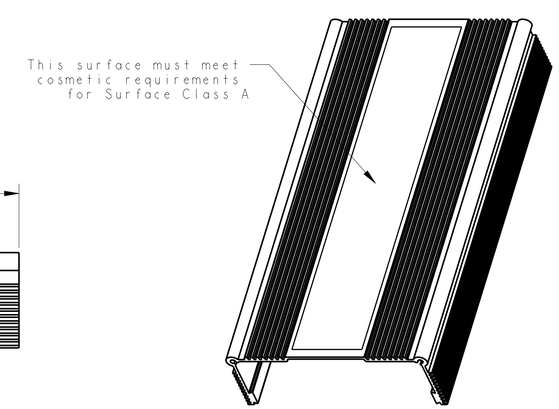

PART NUMBER

CC848873380

DES	J.C
ENG	J.C
SUP	
DATE	17-AUG-09

CHANGE DIM 2.0 TO 2.3

DES	ENG	DATE	REV
Jacky	Jacky	7.Sep.09	2

Design updated

DES	ENG	DATE	REV
Jacky	Jacky	22.Oct.09	3

Add surface treatment of sandblast
(2,G)Dim.82.6 must be inspected

DES	ENG	DATE	REV
Jason	Jason	07.Dec.09	4

Update silk-screen format

DES	ENG	DATE	REV
Jason	Jason	10.Dec.09	5

(2,G)82.6+0.4/-0.2 was 82.6±0.2
(4,C)60°±2.0 was 60°
(1,F)2.30+0.15/-0 was 2.30+0.05/-0
Finish change from sandblast to
alkaline washing
Add the surface cosmetic requirement
Update the silkscreen contents

DES	ENG	DATE	REV
Jason	Jason	06.Apr.10	6

TITLE
COVER, COVER OF EP120 CASE
DRAWING DESCRIPTION

LINEAGE POWER

LINEAGE POWER - PROPRIETARY
USE PURSUANT TO COMPANY INSTRUCTIONS

THIRD ANGLE PJTN	DOC TYPE	DRAWING ID	SHEET	ISSUE	DWG SIZE
	DWG	CC848873380-COV	1 OF 2	6	C2/AIR

CC848873380.	PART	PROI_REVIS	ON
CC848873380-COV	DRAWING	PROI_REVIS	ON PROI_VERSION
FILE NAME	FILE TYPE	PRO/I REV	PRO/I VER

C2_ASSY_FORMAT.FRM FEB 2003