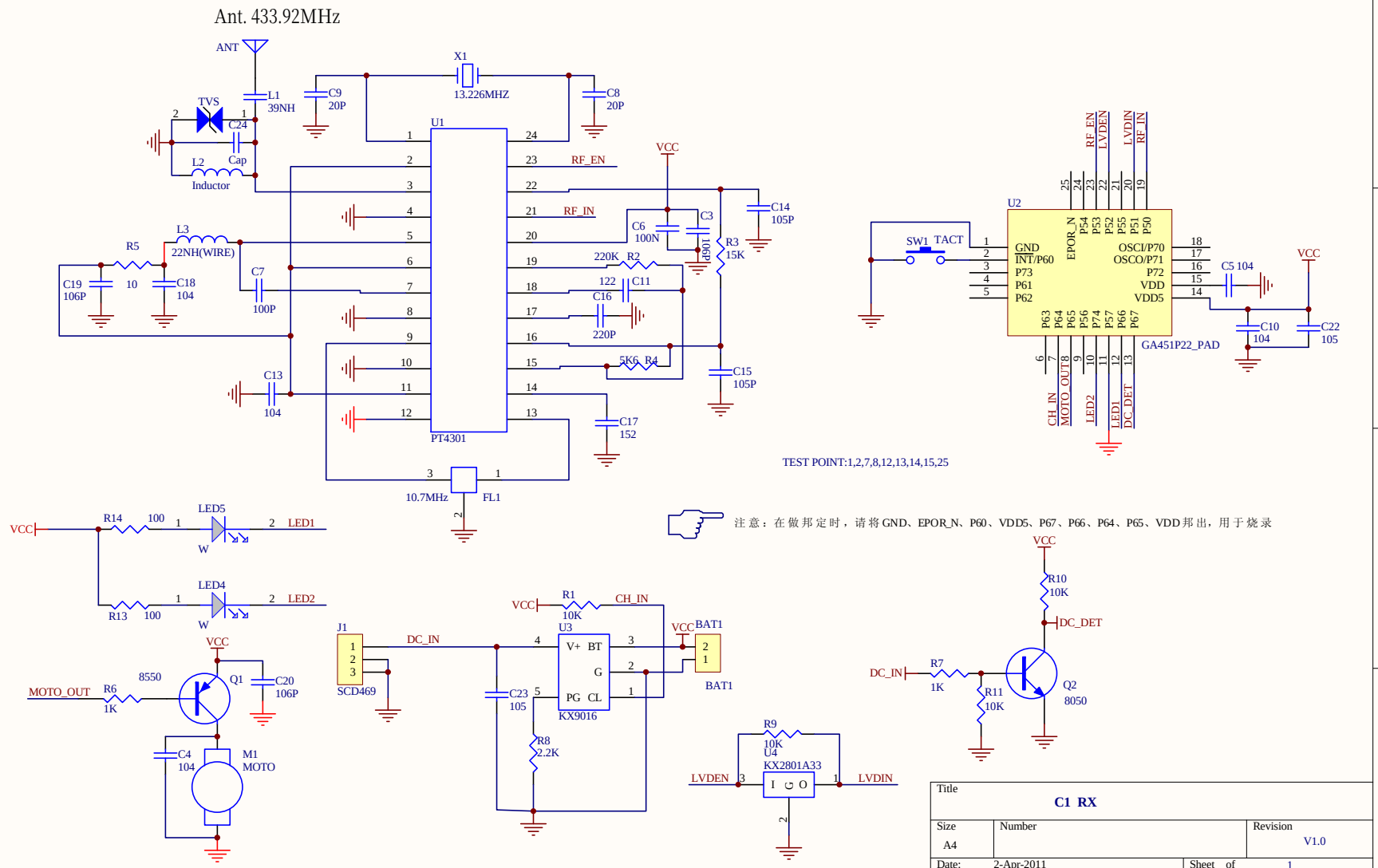

Title		
C1 RX		
Size A4	Number	Revision V1.0
Date: 2-Apr-2011	Sheet of 1	
File: E:\开发案\I菜亚跳蛋\C1资料\502 .ddb	Drawn By:	