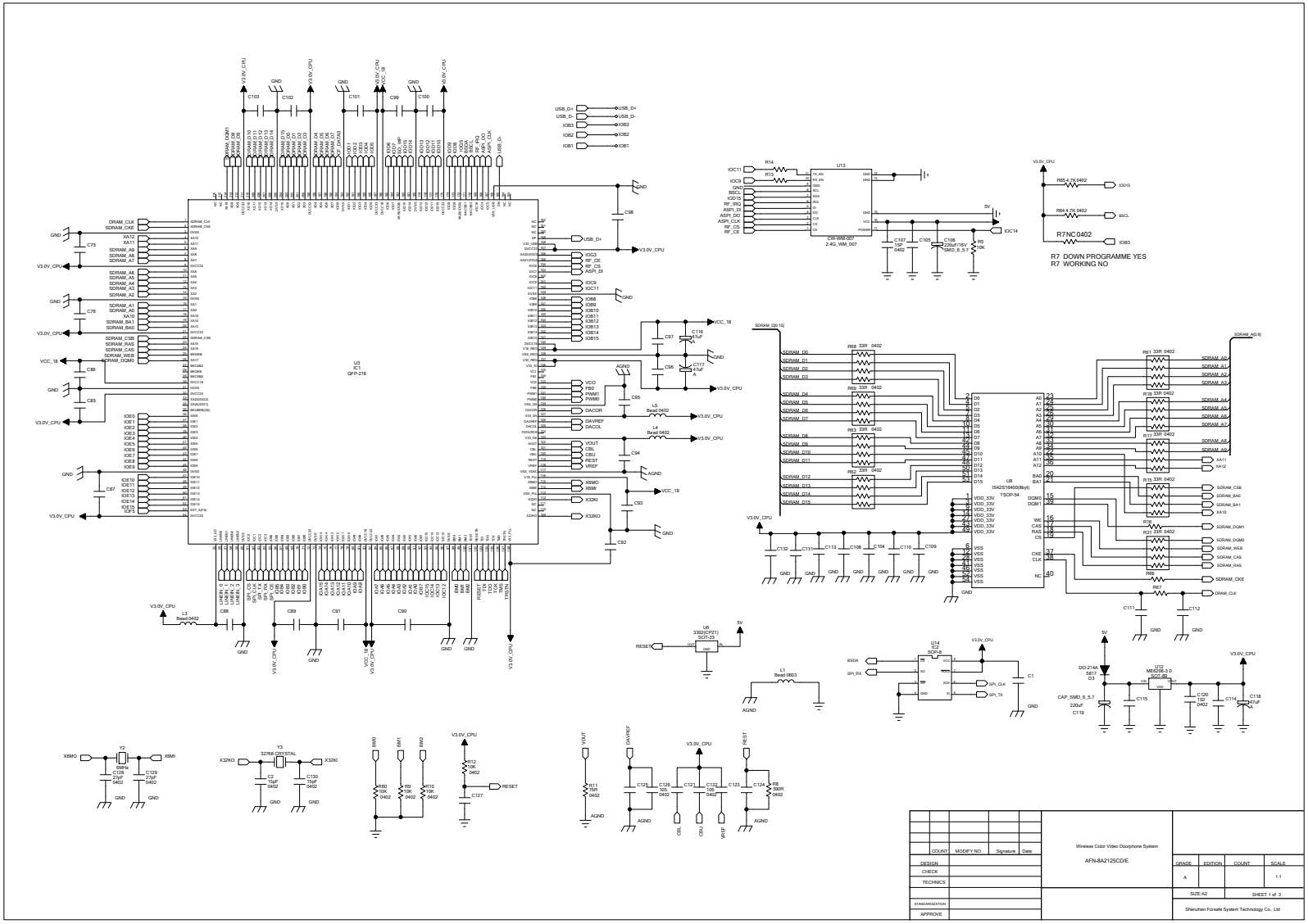
U3
IC1
QFP-216
U13
C90-WM-007
2.4G_WM_007
U8
IS42S16400(Boy)
TSOP-54
U9
3392(P21)
SOT-23
U14
IC2
SOP-8
U12
MB39B-3.0
SOT-89
Y2
6MHz
Y3
32768 CRYSTAL
R7 DOWN PROGRAMME YES
R7 WORKING NO
R7 NC 0402
Wireless Color Video Doorphone System
AFN-8A212SCD/E
Shenzhen Forsafe System Technology Co., Ltd
SIZE:A2
SHEET 1 of 3
SCALE
1:1
GRADE
A
EDITION
COUNT
DESIGN
CHECK
TECHNICS
STANDARDIZATION
APPROVE
MODIFY NO.
Signature
Date

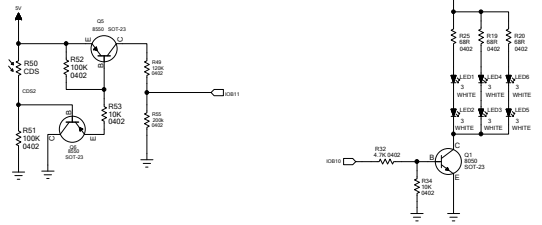

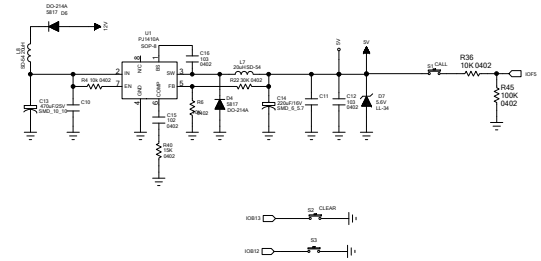

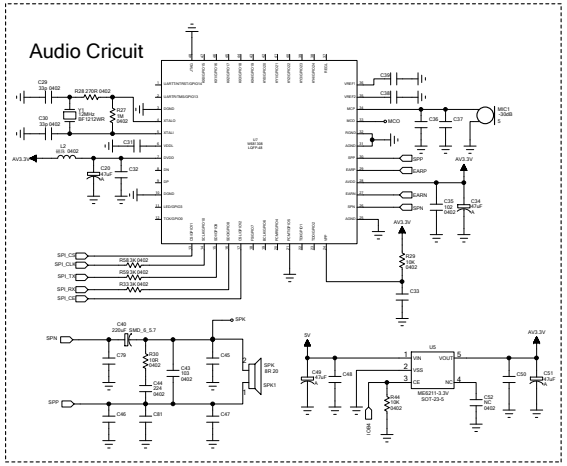

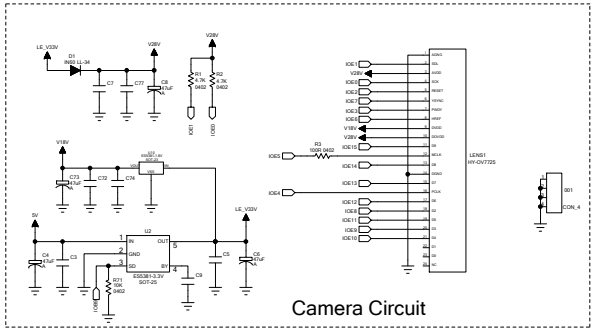

					Wireless Color Video Doorphone System		
					AFN-8A2125CD/E		
	COUNT	MODIFY NO.	Signature	Date		GRADE	EDITION	COUNT	SCALE
DESIGN						A			1:1
CHECK									
TECHNICS									
STANDARDIZATION						SIZE:A2	SHEET 2 of 3		
APPROVE						Shenzhen Forsafe System Technology Co., Ltd			

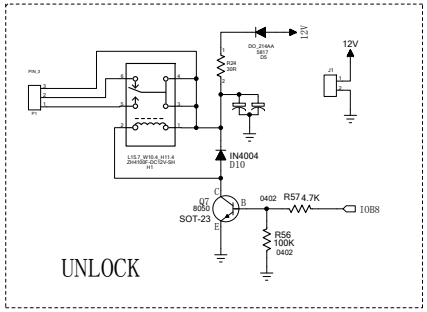

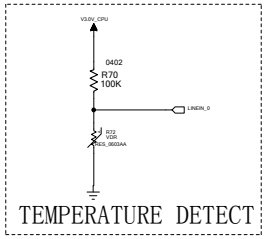

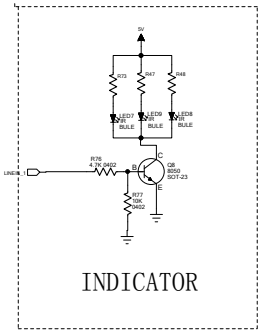

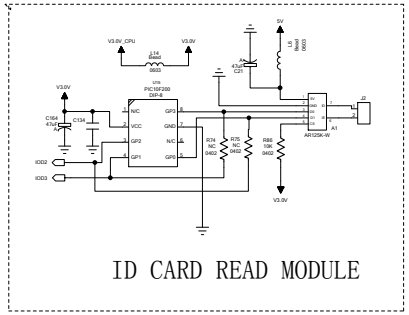

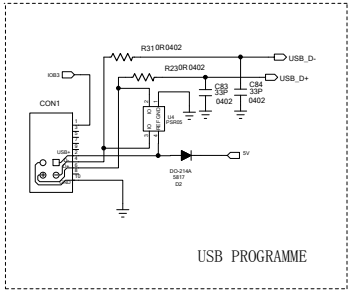

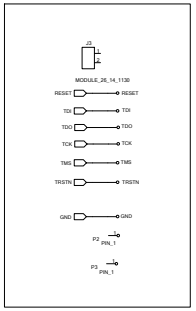

COUNT	MODIFY NO.	Signature	Date	
DESIGN				
CHECK				
TECHNICS				
STANDARDIZATION				
APPROVE				

Wireless Color Video Doorphone System

AFN-8A212SCD/E

GRADE	EDITION	COUNT	SCALE
A			1:1

SIZE:A2 SHEET 3 of 3

Shenzhen Forsafe System Technology Co., Ltd