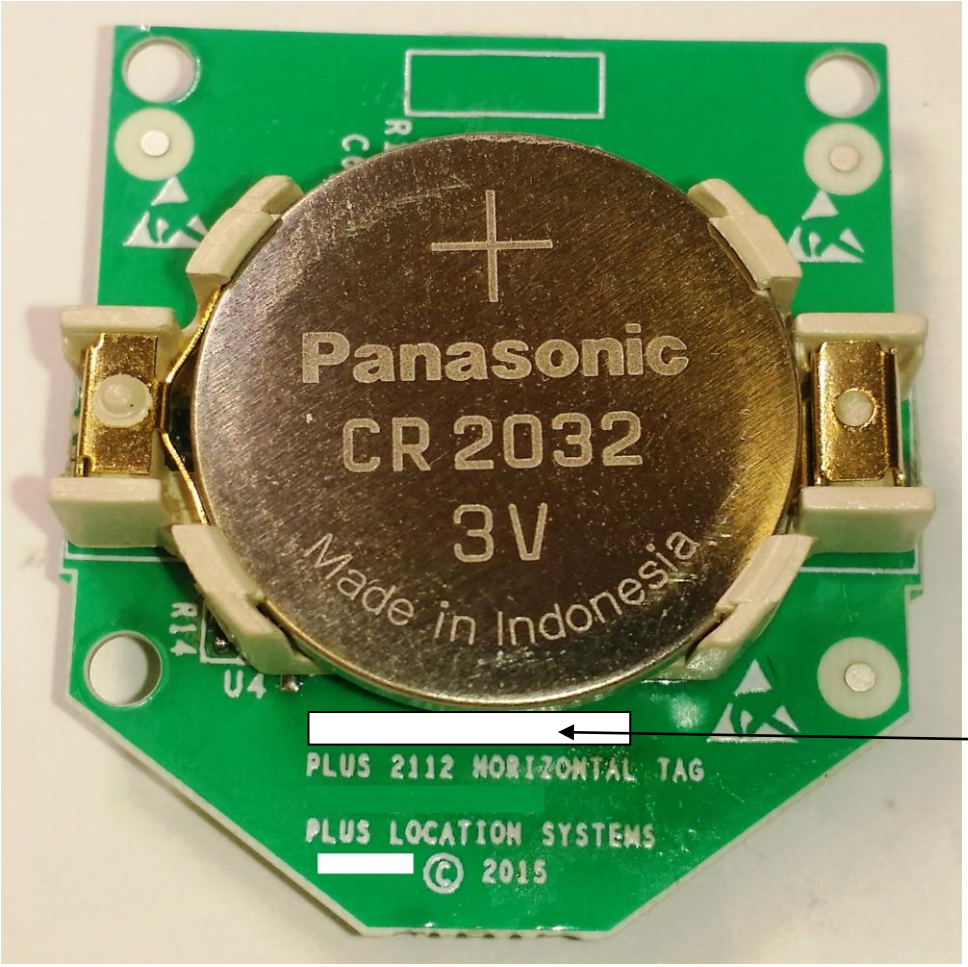
Panasonic
CR 2032
3V
Made in Indonesia
PLUS 2112 HORIZONTAL TAG
PLUS LOCATION SYSTEMS
© 2015

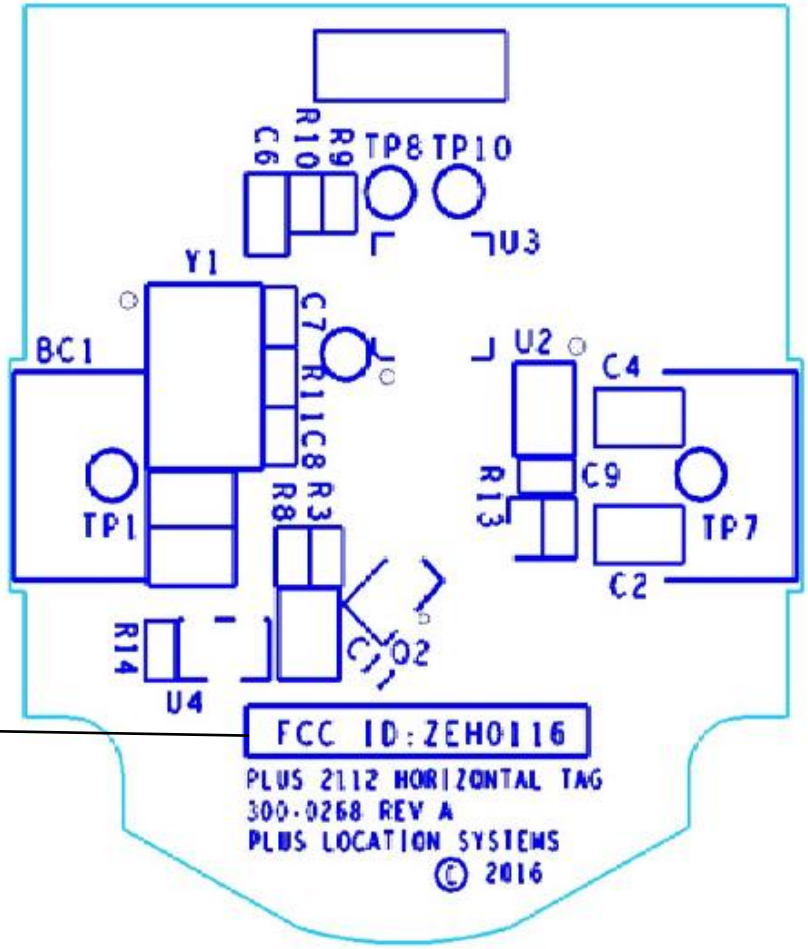
C6
R10
R9
TP8
TP10
U3
Y1
C7
R11
C8
R3
R8
BC1
TP1
U2
C4
C9
R13
TP7
C2
R14
U4
Q2
FCC ID:ZEH0116
PLUS 2112 HORIZONTAL TAG
300-0268 REV A
PLUS LOCATION SYSTEMS
© 2016