Delphi

AP

PP3 (R007)

InnoComm Confidential, Release to Matsunichi

InnoComm Mobile Technology Corp.		
Project Name : Delphi 6107	Title : OMAP 4 Tablet PC (WiFi Version)	
Size : A4	Document Number : Cover	Rev : R007
Date: Thursday, May 24, 2012	Sheet : 1 of 30	

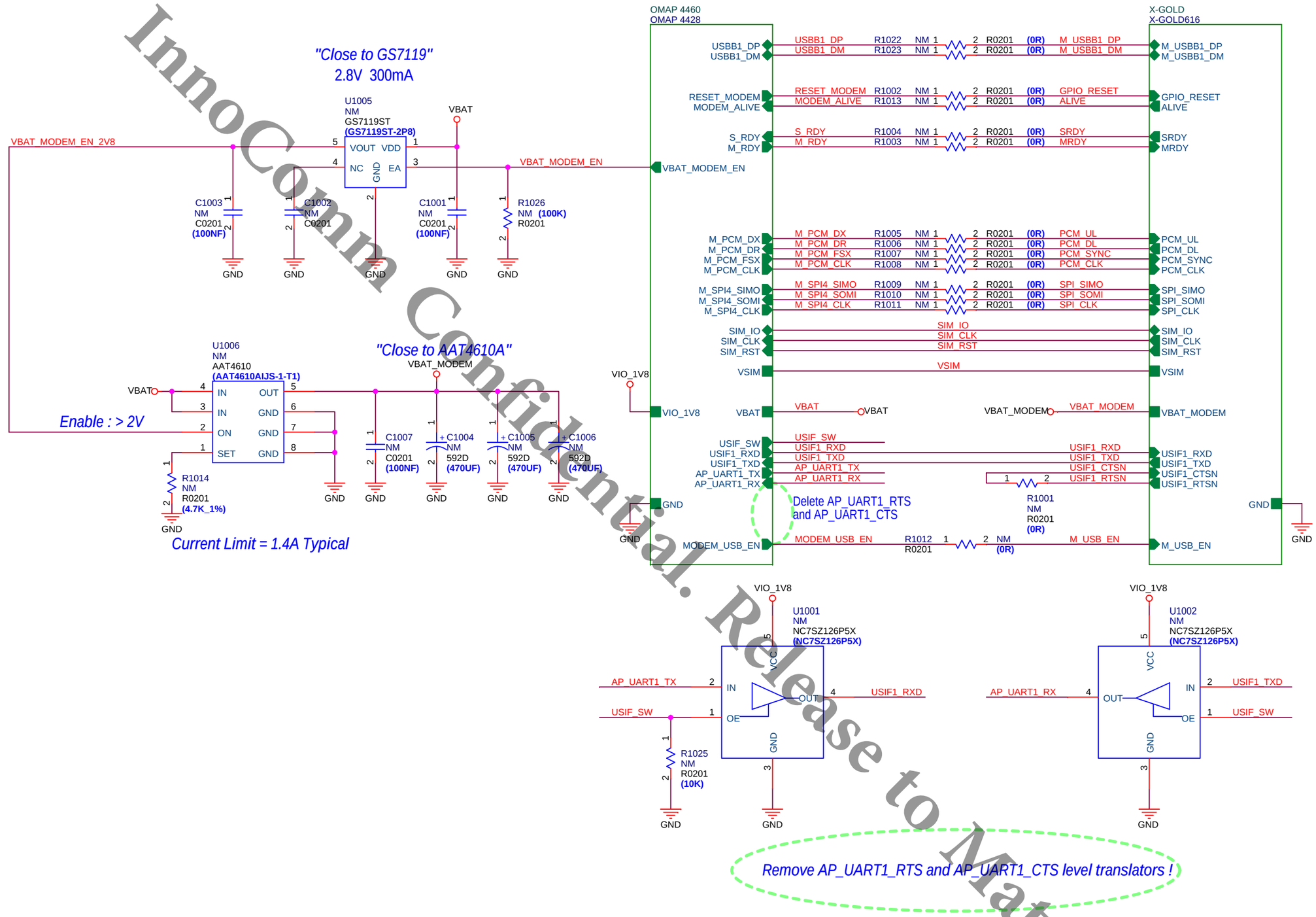

InnoComm Confidential. Release to Matsunichi

InnoComm Mobile Technology Corp.		
Project Name : Delphi 6107	Title : OMAP 4 Tablet PC (WiFi Version)	
Size : A3	Document Number : Root	Rev : R007
Date: Thursday, May 24, 2012	Sheet : 2 of 30	

EP1 R001 (OMAP 4430)
OMAP 4430 + TWL6030 + TWL6040 A1 + TI bq24161YFF
HW_VER[S3, S2, S1] = 000
EP1 R002 (OMAP 4460)
OMAP 4460 1.2GHz + TWL6032 ES 1.0 + TWL6040 A1
HW_VER[S3, S2, S1] = 001
Change CPU from OMAP 4430 to OMAP 4460
Move S_RDY from GPIO_WK7 to GPIO_WK8
Change PMIC from TWL6030 to TWL6032
Add U2301 800mA External Charger bq24210, in order to get extra 500mA charging current
Change Freescale g-Sensor and Freescale eCompass to ST Microelectronic g-Sensor + eCompass LSM303DLHC
Add U2502 TPS73601DBVT 400mA LDO to Support SD 3.0 SDR50 Mode
EP2 R003 (OMAP 4460)
OMAP 4460 1.5GHz + TWL6032 ES 1.0 + TWL6040 A1
HW_VER[S3, S2, S1] = 010
Change external charger IC U2301 bq24210 DPM resistor R2301 from 5.1K ohm to NM. (DPM Threshold = Battery + 100mV)
Swap components of L1503 and L1504
FP R004 (OMAP 4460)
OMAP 4460 1.5GHz + TWL6032 ES 1.1 + TWL6040 A1
HW_VER[S3, S2, S1] = 011
Change light sensor from ELAN ePL5804 to ePL6804
Remove 800mA External Charger U2301 TI bq24210 circuit. (Two battery chargers might interference one aother.)
Remove Touch Key Circuit (Android 4.0 Icecream Sandwitch does not support touch key !)
Change OMAP Bootup Sequence Configuration from SYS_BOOT[5:0] = 0b010110 (USB -> UART -> MMC1 ->MMC2/1) to SYS_BOOT[5:0] = 0b110110 (MMC2/1 -> USB -> UART -> MMC1).
PP R005 (OMAP 4460)
OMAP 4460 1.5GHz + TWL6032 ES 1.1 + TWL6040 A1
HW_VER[S3, S2, S1] = 100
Add External Charger Circuit U2301 TI bq24161YFF
PP2 R006 (OMAP 4460)
OMAP 4460 1.5GHz + TWL6032 ES 1.1 + TWL6040 A2
HW_VER[S3, S2, S1] = 101
Seperated Ground Plans for PMIC TWL6032
Add 10uF capacitors C1714 and C1715 to improve camera Low Lux Noise.
Add 100nF capacitor C2322 as a filter for external battery charger IC TI bq24121 temperature sensing voltage.
Change C2221 from 1uF to 470nF. Fixe the LCD panel backlight discontinuous slope issue at high brightness.
PP3 R007 (OMAP 4460)
Change B1501 ~ B1505 to Short pad.
Add T1701 (NM), T1702 (NM) ,TP2302
Add 10uF capacitors C1716 and C1717(NM) to improve camera Low Lux Noise.
Remove R1711
Change SP2 footprint to SQ-46G

InnoComm Confidential. Release to Matsunichi.

InnoComm Mobile Technology Corp.		
Project Name : Delphi 6107	Title : OMAP 4 Tablet PC (WiFi Version)	
Size : A4	Document Number : Change List	Rev : R007
Date: Thursday, May 24, 2012	Sheet : 3 of 30	

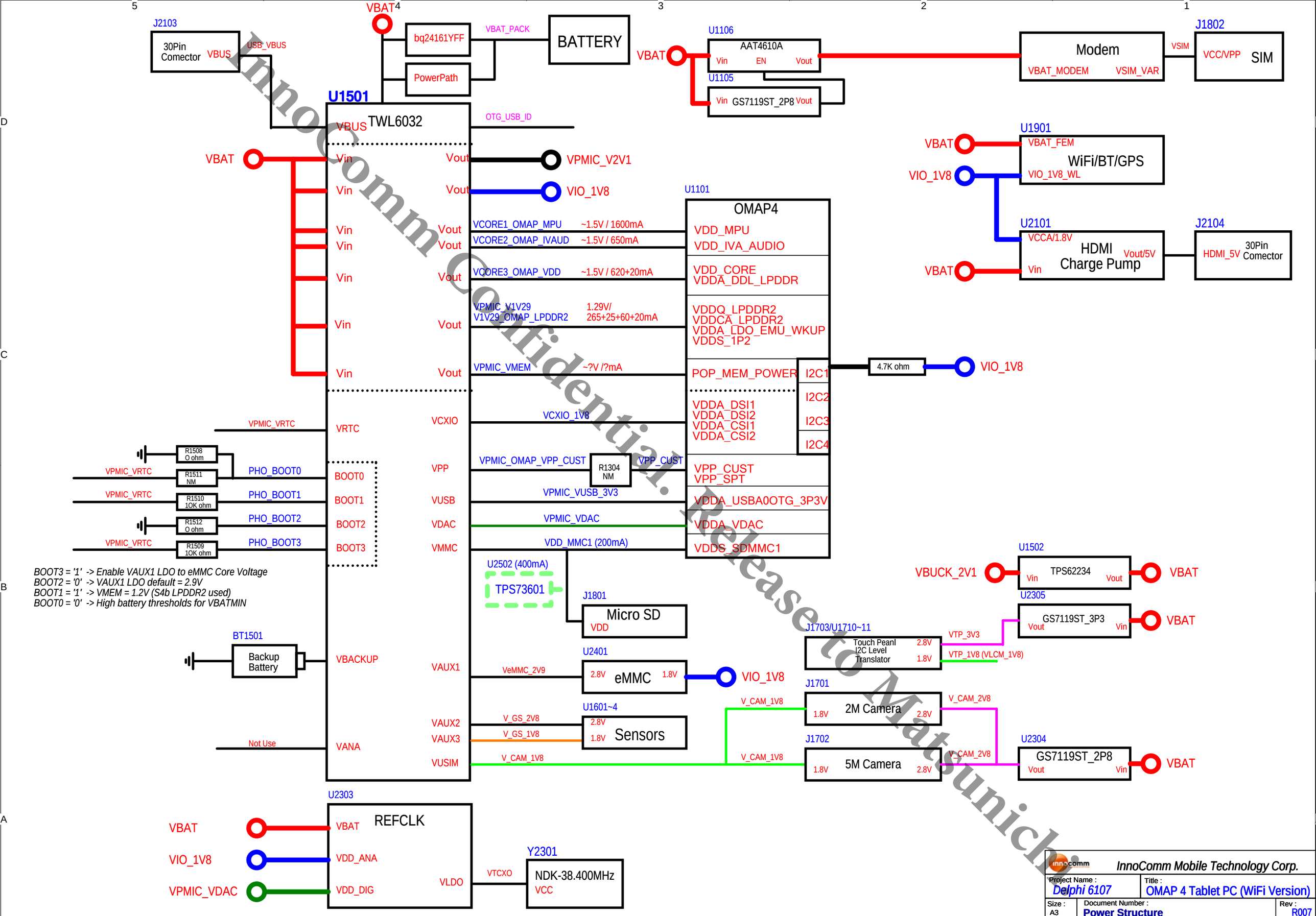

InnoComm Confidential. Release to Matsunichi

InnoComm Mobile Technology Corp.			
Project Name : Delphi 6107	Title : OMAP 4 Tablet PC (WiFi Version)		
Size : A3	Document Number : Power Structure		Rev : R007
Date: Thursday, May 24, 2012	Sheet : 4 of 30		

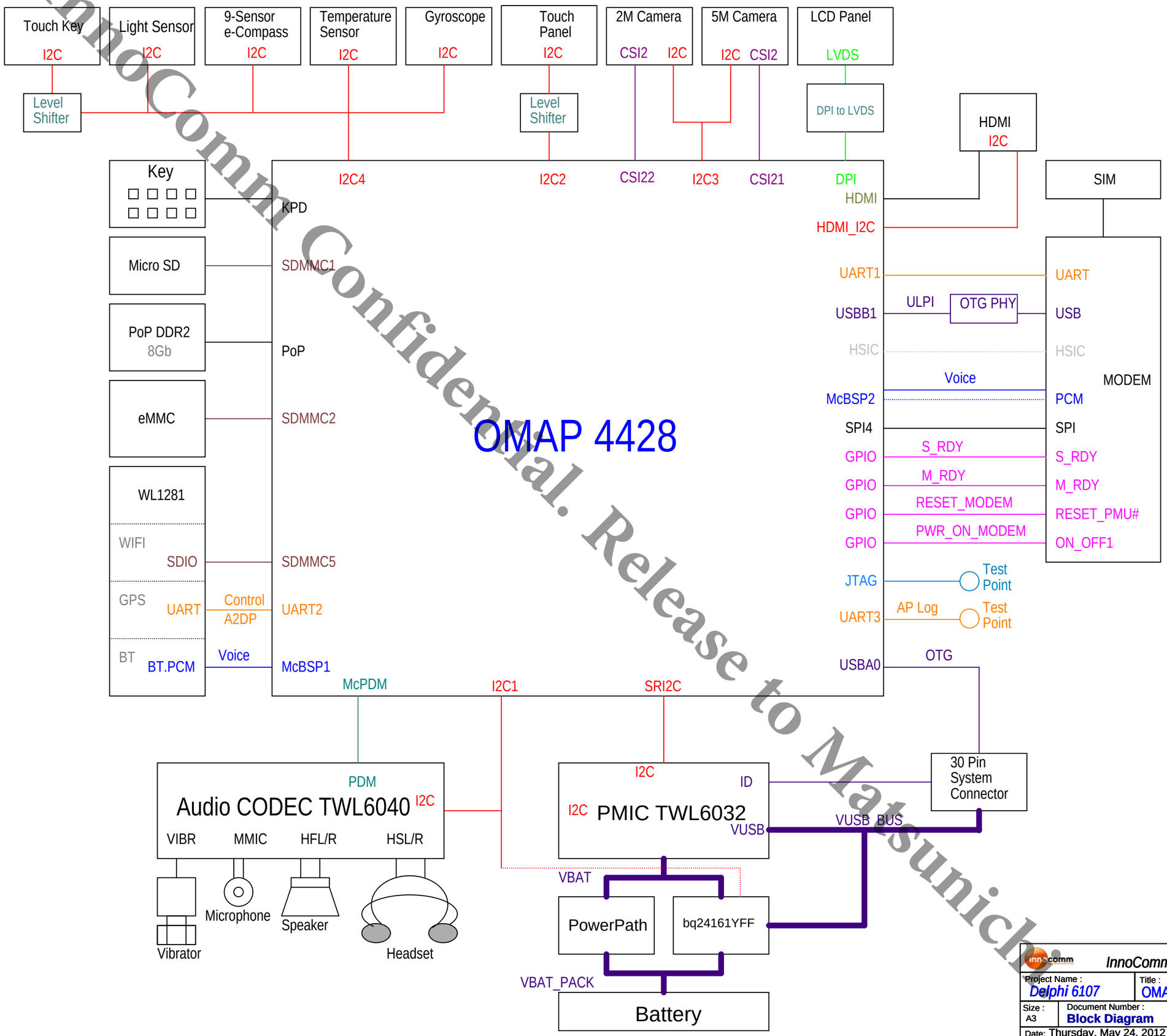

InnoComm Confidential. Release to Matsunichi

InnoComm Mobile Technology Corp.			
Project Name : Delphi 6107	Title : OMAP 4 Tablet PC (WiFi Version)		
Size : A3	Document Number : Block Diagram		Rev : R007
Date: Thursday, May 24, 2012	Sheet : 10 of 30		

OMAP / Host Signaling I/Fs

Component ROOM = OMAP

U1101A
OMAP4428 111-1003315

MODEM PCM

2	M_PCM_CLK	AD27
2	M_PCM_DR	AD26
2	M_PCM_DX	AD25
2	M_PCM_FSX	AD28

BT Voice

19	BT_PCM_CLK	R1114	1	2	0R	R0201	AC26
19	BT_PCM_DR	R1115	1	2	0R	R0201	AC25
19	BT_PCM_DX	R1116	1	2	0R	R0201	AB25
19	BT_PCM_FS	R1117	1	2	0R	R0201	AC27

6040 PDM

14	h_PDM_UL_DATA	AG25
14	h_PDM_DL_DATA	AF25
14	h_PDM_FRAME	AE25
14	h_PDM_CLK	AF26
14	h_ABE_CLKS	AH26

Modem USB

22	LCD_BL_EN	AE24
21	HSUSB1_NXT	AF24
21	HSUSB1_CLK	AG24
21	HSUSB1_STP	AH24
21	HSUSB1_DIR	AE18
21	HSUSB1_D[0:7]	AG19, AF19, AE19, AF18, AG18, AE17, AF17, AH17, AE16, AF16, AG16

HSUSB1_D0, HSUSB1_D1, HSUSB1_D2, HSUSB1_D3, HSUSB1_D4, HSUSB1_D5, HSUSB1_D6, HSUSB1_D7

TP-0.5	TP1113	1	M_HSIC_DATA AF14
TP-0.5	TP1114	1	M_HSIC_STROBE AE14

MICRO SD

18	SD_CLK	R11021	2	33R	MMC1_CLK	D2
18	SD_CMD	R11031	2	33R	MMC1_CMD	E3
	SD_DAT0	R11041	2	33R	MMC1_DAT0	E4
	SD_DAT1	R11051	2	33R	MMC1_DAT1	E2
	SD_DAT2	R11061	2	33R	MMC1_DAT2	E1
	SD_DAT3	R11071	2	33R	MMC1_DAT3	F4
18	SD_DAT[0:3]					F3, F1, G4, G3

R0201

BT UART2

19	BT_UART2_CTS	AB26
19	BT_UART2_RTS	AB27
19	BT_UART2_RX	AA25
19	BT_UART2_TX	AA26

MODEM UART1

2	AP_UART1_RX	AF22
2	AP_UART1_TX	AE22
21	LOG_UART3_RX	AG22
21	LOG_UART3_TX	AE23

Delete AP_UART1_CTS and AP_UART1_RTS

MODEM SPI4

2	M_SPI4_CLK	AE21
2	M_SPI4_SIMO	AF20
2	M_SPI4_SOMI	AF21
		AE20
		AG20
		AH19

TP-0.5	TP1115	1	UART4_RX
TP-0.5	TP1116	1	UART4_TX

HDMI

21	HDMI_HPD	B9
21	HDMI_CEC	B10
21	HDMI_SCL	A8
21	HDMI_SDA	B8
21	HDMI_D0+	C10
21	HDMI_D0-	D10
21	HDMI_D1+	C9
21	HDMI_D1-	D9
21	HDMI_D2+	C8
21	HDMI_D2-	D8
21	HDMI_CLK+	C11
21	HDMI_CLK-	D11

VIO_1V8 — R1108 1 — R0201 2 — 100K

18 SIM_DET

ABE_McBSP2_CLKX/McSPI2_CLK/ABE_MCASP_AHCLKX/GPIO_110/USBB2_MM_RXDM/SAFE_MODE
ABE_McBSP2_DR/McSPI2_SOMI/ABE_MCASP_AXR/GPIO_111/USBB2_MM_RXDP/SAFE_MODE
ABE_McBSP2_DX/McSPI2_SIMO/ABE_MCASP_AMUTE/GPIO_112/USBB2_MM_RXRCV/SAFE_MODE
ABE_McBSP2_FSX/McSPI2_CS0/ABE_MCASP_AFSX/GPIO_113/USBB2_MM_TXEN/SAFE_MODE

ABE_McBSP1_CLKX/ABE_SLIMBUS1_CLOCK/GPIO_114/SAFE_MODE
ABE_McBSP1_DR/ABE_SLIMBUS1_DATA/GPIO_115/SAFE_MODE
ABE_McBSP1_DX/SDMMC3_DAT2/ABE_MCASP_ACLKX/GPIO_116/SAFE_MODE
ABE_McBSP1_FSX/SDMMC3_DAT3/ABE_MCASP_AMUTEIN/GPIO_117/SAFE_MODE

ABE_PDM_UL_DATA/ABE_McBSP3_DR/SAFE_MODE
ABE_PDM_DL_DATA/ABE_McBSP3_DX/SAFE_MODE
ABE_PDM_FRAME/ABE_McBSP3_CLKX/SAFE_MODE
ABE_PDM_LB_CLK/ABE_McBSP3_FSX/SAFE_MODE
ABE_CLKS/GPIO_118/SAFE_MODE

ABE_DMIC_CLK1/GPIO_119/USBB2_MM_TXSE0/SAFE_MODE
ABE_DMIC_DIN1/GPIO_120/USBB2_MM_TXDAT/SAFE_MODE
ABE_DMIC_DIN2/SLIMBUS2_CLOCK/GPIO_121/SAFE_MODE
ABE_DMIC_DIN3/SLIMBUS2_DATA/ABE_DMIC_CLK2/GPIO_122/SAFE_MODE

USBB1_ULPITLL_CLK/HSI1_CAWAKE/GPIO_84/USBB1_ULPIPHY_CLK/ATTILA_HW_DBG20/SAFE_MODE
USBB1_ULPITLL_STP/HSI1_CADATA/McBSP4_CLKR/GPIO_85/USBB1_ULPIPHY_STP/USBB1_MM_RXDP/ATTILA_HW_DBG21/SAFE_MODE
USBB1_ULPITLL_DIR/HSI1_CAFLAG/McBSP4_FSR/GPIO_86/USBB1_ULPIPHY_DIR/ATTILA_HW_DBG22/SAFE_MODE
USBB1_ULPITLL_NXT/HSI1_ACREADY/McBSP4_FSX/GPIO_87/USBB1_ULPIPHY_NXT/USBB1_MM_RXDM/ATTILA_HW_DBG23/SAFE_MODE
USBB1_ULPITLL_DAT0/HSI1_ACWAKE/McBSP4_CLKX/GPIO_88/USBB1_ULPIPHY_DAT0/USBB1_MM_RXRCV/ATTILA_HW_DBG24/SAFE_MODE
USBB1_ULPITLL_DAT1/HSI1_ACDATA/McBSP4_DX/GPIO_89/USBB1_ULPIPHY_DAT1/USBB1_MM_TXSE0/ATTILA_HW_DBG25/SAFE_MODE
USBB1_ULPITLL_DAT2/HSI1_ACFLAG/McBSP4_DR/GPIO_90/USBB1_ULPIPHY_DAT2/USBB1_MM_TXDAT/ATTILA_HW_DBG26/SAFE_MODE
USBB1_ULPITLL_DAT3/HSI1_CAREADY/GPIO_91/USBB1_ULPIPHY_DAT3/USBB1_MM_TXEN/ATTILA_HW_DBG27/SAFE_MODE
USBB1_ULPITLL_DAT4/DMTIMER8_PWM_EVT/ABE_McBSP3_DR/GPIO_92/USBB1_ULPIPHY_DAT4/ATTILA_HW_DBG28/SAFE_MODE
USBB1_ULPITLL_DAT5/DMTIMER9_PWM_EVT/ABE_McBSP3_DX/GPIO_93/USBB1_ULPIPHY_DAT5/ATTILA_HW_DBG29/SAFE_MODE
USBB1_ULPITLL_DAT6/DMTIMER10_PWM_EVT/ABE_McBSP3_CLKX/GPIO_94/USBB1_ULPIPHY_DAT6/ABE_DMIC_DIN3/ATTILA_HW_DBG30/SAFE_MODE
USBB1_ULPITLL_DAT7/DMTIMER11_PWM_EVT/ABE_McBSP3_FSX/GPIO_95/USBB1_ULPIPHY_DAT7/ABE_DMIC_CLK3/ATTILA_HW_DBG31/SAFE_MODE
USBB1_HSIC_DATA/GPIO_96/SAFE_MODE
USBB1_HSIC_STROBE/GPIO_97/SAFE_MODE

SDMMC1_CLK/DPM_EMU19/GPIO_100/SAFE_MODE
SDMMC1_CMD/UART1_RX/GPIO_101/SAFE_MODE
SDMMC1_DAT0/DPM_EMU18/GPIO_102/SAFE_MODE
SDMMC1_DAT1/DPM_EMU17/GPIO_103/SAFE_MODE
SDMMC1_DAT2/DPM_EMU16/GPIO_104/JTAG_TMS_TMSC/SAFE_MODE
SDMMC1_DAT3/DPM_EMU15/GPIO_105/JTAG_TCK/SAFE_MODE
SDMMC1_DAT4/GPIO_106/SAFE_MODE
SDMMC1_DAT5/GPIO_107/SAFE_MODE
SDMMC1_DAT6/GPIO_108/SAFE_MODE
SDMMC1_DAT7/GPIO_109/SAFE_MODE

VDD_SDMMC1 Power Domain

UART2_CTS/SDMMC3_CLK/GPIO_123/SAFE_MODE
UART2_RTS/SDMMC3_CMD/GPIO_124/SAFE_MODE
UART2_RX/SDMMC3_DAT0/GPIO_125/SAFE_MODE
UART2_TX/SDMMC3_DAT1/GPIO_126/SAFE_MODE

McSPI1_CLK/GPIO_134/SAFE_MODE
McSPI1_SOMI/GPIO_135/SAFE_MODE
McSPI1_SIMO/GPIO_136/SAFE_MODE
McSPI1_CS0/GPIO_137/SAFE_MODE
McSPI1_CS1/UART1_RX/GPIO_138/SAFE_MODE
McSPI1_CS2/UART1_CTS/SLIMBUS2_CLOCK/GPIO_139/SAFE_MODE
McSPI1_CS3/UART1_RTS/SLIMBUS2_DATA/GPIO_140/SAFE_MODE
UART3_CTS_RCTX/UART1_TX/GPIO_141/SAFE_MODE
UART3_RTS_SD/GPIO_142/SAFE_MODE
UART3_RX_IRRX/DMTIMER8_PWM_EVT/GPIO_143/SAFE_MODE
UART3_TX_IRTX/DMTIMER9_PWM_EVT/GPIO_144/SAFE_MODE

McSPI4_CLK/SDMMC4_CLK/GPIO_151/SAFE_MODE
McSPI4_SIMO/SDMMC4_CMD/GPIO_152/SAFE_MODE
McSPI4_SOMI/SDMMC4_DAT0/GPIO_153/SAFE_MODE
McSPI4_CS0/SDMMC4_DAT3/GPIO_154/SAFE_MODE
UART4_RX/SDMMC4_DAT2/GPIO_155/SAFE_MODE
UART4_TX/SDMMC4_DAT1/GPIO_156/SAFE_MODE

SIM_IO/GPIO_WK0/ATTILA_HW_DBG1/SAFE_MODE
SIM_CLK/GPIO_WK1/ATTILA_HW_DBG2/SAFE_MODE
SIM_RESET/GPIO_WK2/ATTILA_HW_DBG3/SAFE_MODE
SIM_CD/GPIO_WK3/ATTILA_HW_DBG4/SAFE_MODE
SIM_PWR_CTRL/GPIO_WK4/ATTILA_HW_DBG5/SAFE_MODE
USBC1_ICUSB_DP/GPIO_98/SAFE_MODE
USBC1_ICUSB_DM/GPIO_99/SAFE_MODE

VDD_USIM Power Domain

HDMI_HPD/GPIO_63/SAFE_MODE
HDMI_CEC/GPIO_64/SAFE_MODE
HDMI_DDC_SCL/GPIO_65/SAFE_MODE
HDMI_DDC_SDA/GPIO_66/SAFE_MODE
HDMI_DATA0X
HDMI_DATA0Y
HDMI_DATA1X
HDMI_DATA1Y
HDMI_DATA2X
HDMI_DATA2Y
HDMI_CLOCKX
HDMI_CLOCKY

OMAP4460 ES2.0, EMU,
12x12mm, FCPOP1
(547 Bottom Balls, 0.4mm Pitch, 216 Top Pads)

U1101_POP 111-1002908
EDB8164B3PF-8D-F
4Gb POP MEMORY (MOUNT ON TOP OF OMAP4430)

CSI22_DY2/CAM2_WEN M27
CSI22_DX2/CAM2_FID N27

NC for OMAP 4428 and OMAP 4430

SDMMC5_CLK/MCSPI2_CLK/USBC1_ICUSB_DP/GPIO_145/SAFE_MODE
SDMMC5_CMD/MCSPI2_SIMO/USBC1_ICUSB_DM/GPIO_146/SAFE_MODE
SDMMC5_DAT0/MCSPI2_SOMI/USBC1_ICUSB_RCV/GPIO_147/SAFE_MODE
SDMMC5_DAT1/USBC1_ICUSB_TXEN/GPIO_148/SAFE_MODE
SDMMC5_DAT2/MCSPI2_CS1/GPIO_149/SAFE_MODE
SDMMC5_DAT3/MCSPI2_CS0/GPIO_150/SAFE_MODE

WIFI SDMMC5

R0201

AE5	MMC5_CLK	R1101	1	2	33R	WIFI_SDIO_CLK	19
AF5	MMC5_CMD	R1118	1	2	33R	WIFI_SDIO_CMD	19
AE4	MMC5_DAT0	R1119	1	2	33R	WIFI_SDIO_DAT0	19
AF4	MMC5_DAT1	R1120	1	2	33R	WIFI_SDIO_DAT1	19
AG3	MMC5_DAT2	R1121	1	2	33R	WIFI_SDIO_DAT2	19
AF3	MMC5_DAT3	R1122	1	2	33R	WIFI_SDIO_DAT3	19

Input Only
VDDA_CSI21 Power Domain
VDDA_CSI22 Power Domain

Main Camera

R26	MAIN_CAM_CLK+	17
R25	MAIN_CAM_CLK-	17
T26	MAIN_CAM_DAT0+	17
T25	MAIN_CAM_DAT0-	17

CSI21_DX0/GPI_67/SAFE_MODE U26
CSI21_DY0/GPI_68/SAFE_MODE U25
CSI21_DX1/GPI_69/SAFE_MODE V26
CSI21_DY1/GPI_70/SAFE_MODE V25
CSI21_DX2/GPI_71/SAFE_MODE W26
CSI21_DY2/GPI_72/SAFE_MODE W25
CSI21_DX3/GPI_73/SAFE_MODE
CSI21_DY3/GPI_74/SAFE_MODE
CSI21_DX4/GPI_75/SAFE_MODE
CSI21_DY4/GPI_76/SAFE_MODE

Sub Camera

M26	SUB_CAM_CLK+	17
M25	SUB_CAM_CLK-	17
N26	SUB_CAM_DAT0+	17
N25	SUB_CAM_DAT0-	17
T27	SUB_CAM_nSTANDBY	17
U27	CAM_STROBE	17
V27	CAM_nRESET	17

CSI22_DX0/GPI_77/SAFE_MODE
CSI22_DY0/GPI_78/SAFE_MODE
CSI22_DX1/GPI_79/SAFE_MODE
CSI22_DY1/GPI_80/SAFE_MODE
CAM_SHUTTER/GPIO_81/SAFE_MODE
CAM_STROBE/GPIO_82/SAFE_MODE
CAM_GLOBALRESET/GPIO_83/SAFE_MODE

CVIDEO_TVOUT B7
CVIDEO_VFB C7
CVIDEO_RSET D7

DSI1_DX0 P3
DSI1_DY0 P4
DSI1_DX1 N3
DSI1_DY1 N4
DSI1_DX2 M3
DSI1_DY2 M4
DSI1_DX3 L3
DSI1_DY3 L4
DSI1_DX4 K3
DSI1_DY4 K4

DSI2_DX0 T3
DSI2_DY0 T4
DSI2_DX1 U3
DSI2_DY1 U4
DSI2_DX2 V3
DSI2_DY2 V4

GPMC_AD0/SDMMC2_DAT0
GPMC_AD1/SDMMC2_DAT1
GPMC_AD2/SDMMC2_DAT2
GPMC_AD3/SDMMC2_DAT3
GPMC_AD4/SDMMC2_DAT4/SDMMC2_DIR_DAT0
GPMC_AD5/SDMMC2_DAT5/SDMMC2_DIR_DAT1
GPMC_AD6/SDMMC2_DAT6/SDMMC2_DIR_CMD
GPMC_AD7/SDMMC2_DAT7/SDMMC2_CLK_FDBK
GPMC_AD8/KPD_ROW0/C2C_DATA15/GPIO_32
GPMC_AD9/KPD_ROW1/C2C_DATA14/GPIO_33
GPMC_AD10/KPD_ROW2/C2C_DATA13/GPIO_34
GPMC_AD11/KPD_ROW3/C2C_DATA12/GPIO_35
GPMC_AD12/KPD_COL0/C2C_DATA11/GPIO_36
GPMC_AD13/KPD_COL1/C2C_DATA10/GPIO_37
GPMC_AD14/KPD_COL2/C2C_DATA9/GPIO38
GPMC_AD15/KPD_COL3/C2C_DATA8/GPIO39

eMMC_AD[0:7] 24

R0201

C12	MMC2_DAT0	R11231	2	33R	eMMC_AD0
D12	MMC2_DAT1	R11241	2	33R	eMMC_AD1
C13	MMC2_DAT2	R11251	2	33R	eMMC_AD2
D13	MMC2_DAT3	R11261	2	33R	eMMC_AD3
C15	MMC2_DAT4	R11271	2	33R	eMMC_AD4
D15	MMC2_DAT5	R11281	2	33R	eMMC_AD5
A16	MMC2_DAT6	R11291	2	33R	eMMC_AD6
B16	MMC2_DAT7	R11301	2	33R	eMMC_AD7

C16	TP_RST	17
D16	M_RDY	2
C17	BAT_CHRG_GDN	23
D17	JIG_DET 1 — TP1103 TP-1.5	
C18	PS_INT	16
D18	VTP_3V3_EN	23
C19	MAIN_CAM_nSTANDBY	17
D19	MAIN_CAM_SHUTDOWN	17
B17	M_USBB1_RST	21
A18	HDMI_LS_OE	21
B18	CAM_2V8_EN	23
A19	VLCM_3V3_EN	23
B19		
B20	GS_INT1	16
A21	G-SENSOR_EN	18
B21	MODEM_USB_EN	2
C20	MODEM_ALIVE	2
D20	USIF_SW	2
B25	G-SENSOR_INT1	16
C21	G-SENSOR_INT2	16
D21	TP_INT	17
C22	WLAN_IRQ#	19
C25	WL_EN	19
B22	BT_EN	19
D25	RESET_MODEM	2
B11	eMMC_CLK	24
B12	eMMC_CMD	24
C23	VBAT_MODEM_EN	2,23
D22	HDMI_CT_CP_HPD	21
B26	eMMC_RST	24
B23	GS_INT2	16

GPMC_A16/KPD_ROW4/C2C_DATAIN0/GPIO40/VENC_656_DATA0
GPMC_A17/KPD_ROW5/C2C_DATAIN1/GPIO_41/VENC_656_DATA1/SAFE_MODE
GPMC_A18/KPD_ROW6/C2C_DATAIN2/GPIO_42/VENC_656_DATA2/SAFE_MODE
GPMC_A19/KPD_ROW7/C2C_DATAIN3/GPIO_43/VENC_656_DATA3/SAFE_MODE
GPMC_A20/KPD_COL4/C2C_DATAIN4/GPIO_44/VENC_656_DATA4/SAFE_MODE
GPMC_A21/KPD_COL5/C2C_DATAIN5/GPIO_45/VENC_656_DATA5/SAFE_MODE
GPMC_A22/KPD_COL6/C2C_DATAIN6/GPIO_46/VENC_656_DATA6/SAFE_MODE
GPMC_A23/KPD_COL7/C2C_DATAIN7/GPIO_47/VENC_656_DATA7/SAFE_MODE
GPMC_A24/C2C_CLKOUT0/GPIO_48/SAFE_MODE
GPMC_A25/C2C_CLKOUT1/GPIO_49/SAFE_MODE

GPMC_nCS0/GPIO_50/SYS_NDMAREQ0
GPMC_nCS1/C2C_DATAOUT6/GPIO_51/SAFE_MODE
GPMC_nCS2/C2C_DATAOUT7/GPIO_52/SAFE_MODE
GPMC_nCS3/GPMC_DIR/C2C_DATAOUT4/GPIO_53/SAFE_MODE
GPMC_nWP/DSI1_TE0/GPIO_54/SYS_NDMAREQ1
GPMC_CLK/GPIO_55/SYS_NDMAREQ2
GPMC_nADV_ALE//DSI1_TE1/GPIO_56/SYS_NDMAREQ3
GPMC_nOE/SDMMC2_CLK
GPMC_nWE/SDMMC2_CMD
GPMC_NBE0_CLE/DSI2_TE0/GPIO_59
GPMC_nBE1/C2C_DATAOUT5/GPIO_60/SAFE_MODE
GPMC_WAIT0/DSI2_TE1/GPIO_61
GPMC_WAIT1/C2C_DATAOUT2/GPIO_62/SAFE_MODE

Innocomm Confidential
Release Machine

InnoComm Mobile Technology Corp.		
Project Name : Oracle 6101	Title : OMAP 4 Tablet PC (WiFi Version)	
Size : A3	Document Number : OMAP4428_MEM	Rev : R006
Date: Thursday, May 31, 2012	Sheet : 11 of 30	

OMAP / Host Signaling I/Fs

Component ROOM = OMAP

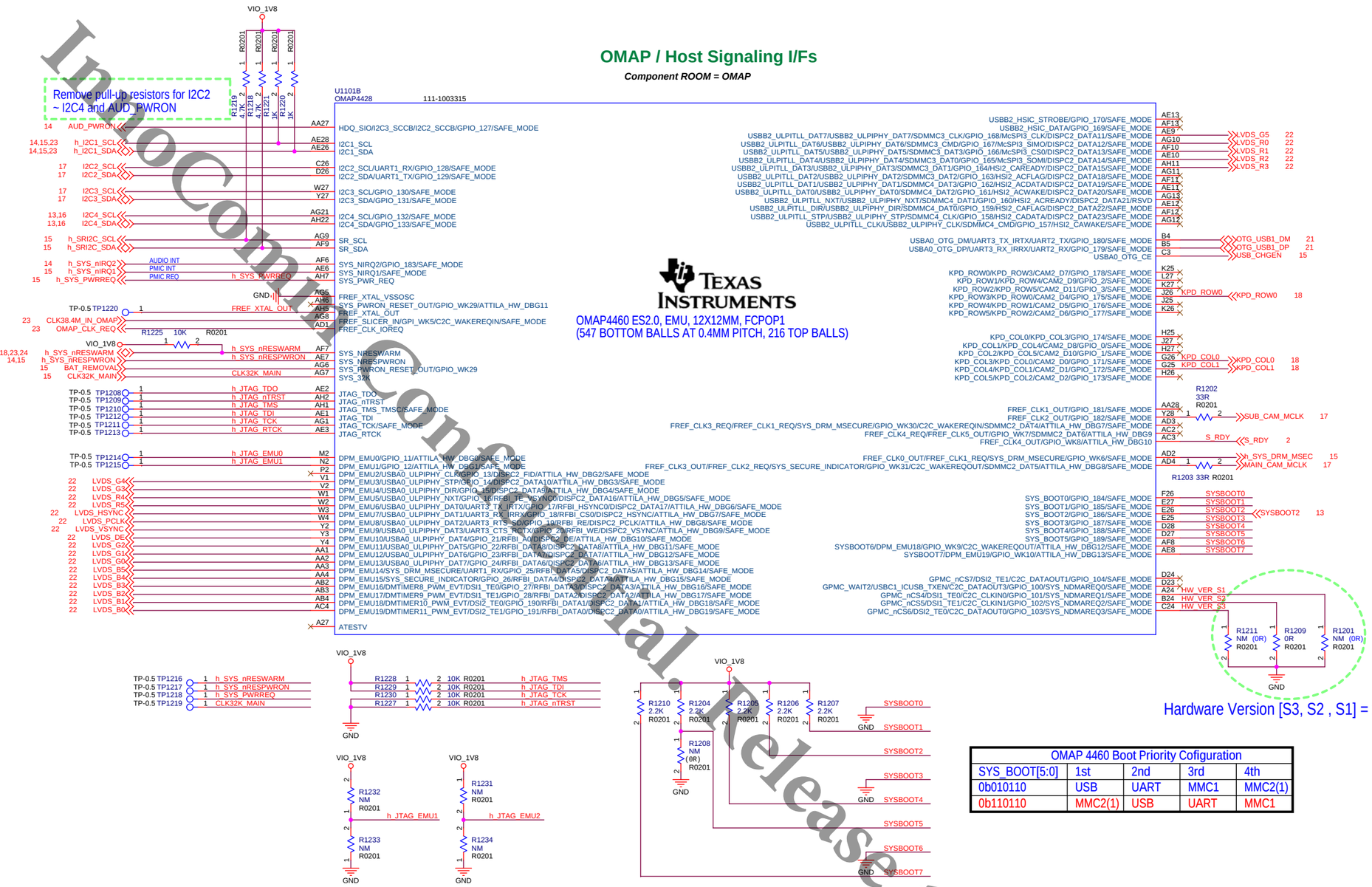

OMAP 4460 Boot Priority Cofiguration				
SYS_BOOT[5:0]	1st	2nd	3rd	4th
0b010110	USB	UART	MMC1	MMC2(1)
0b110110	MMC2(1)	USB	UART	MMC1

InnoComm Confidential. Release to Matsunichi.

InnoComm Mobile Technology Corp.	
Project Name : Delphi 6107	Title : OMAP 4 Tablet PC (WiFi Version)
Size : A2	Document Number : OMAP4460_PERI
Rev : R007	
Date: Thursday, May 31, 2012	Sheet : 12 of 30

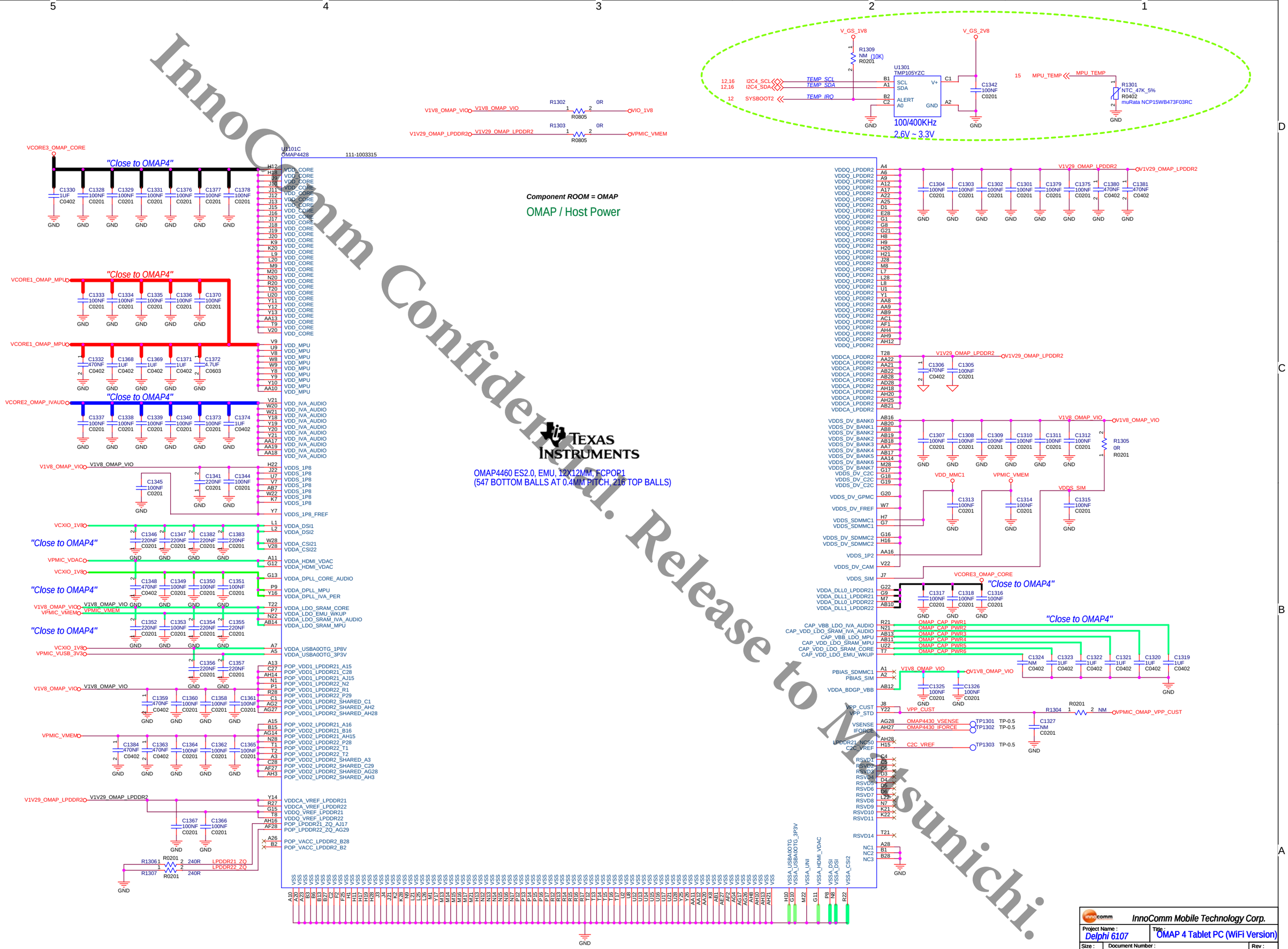

InnoComm Confidential. Release to Mitsunichi.

InnoComm Mobile Technology Corp.	
Project Name : Delphi 6107	Title : OMAP 4 Tablet PC (WiFi Version)
Size : A2	Document Number : OMAP4460 PWR
	Rev : R007
Date: Thursday, May 31, 2012	Sheet : 13 of 30

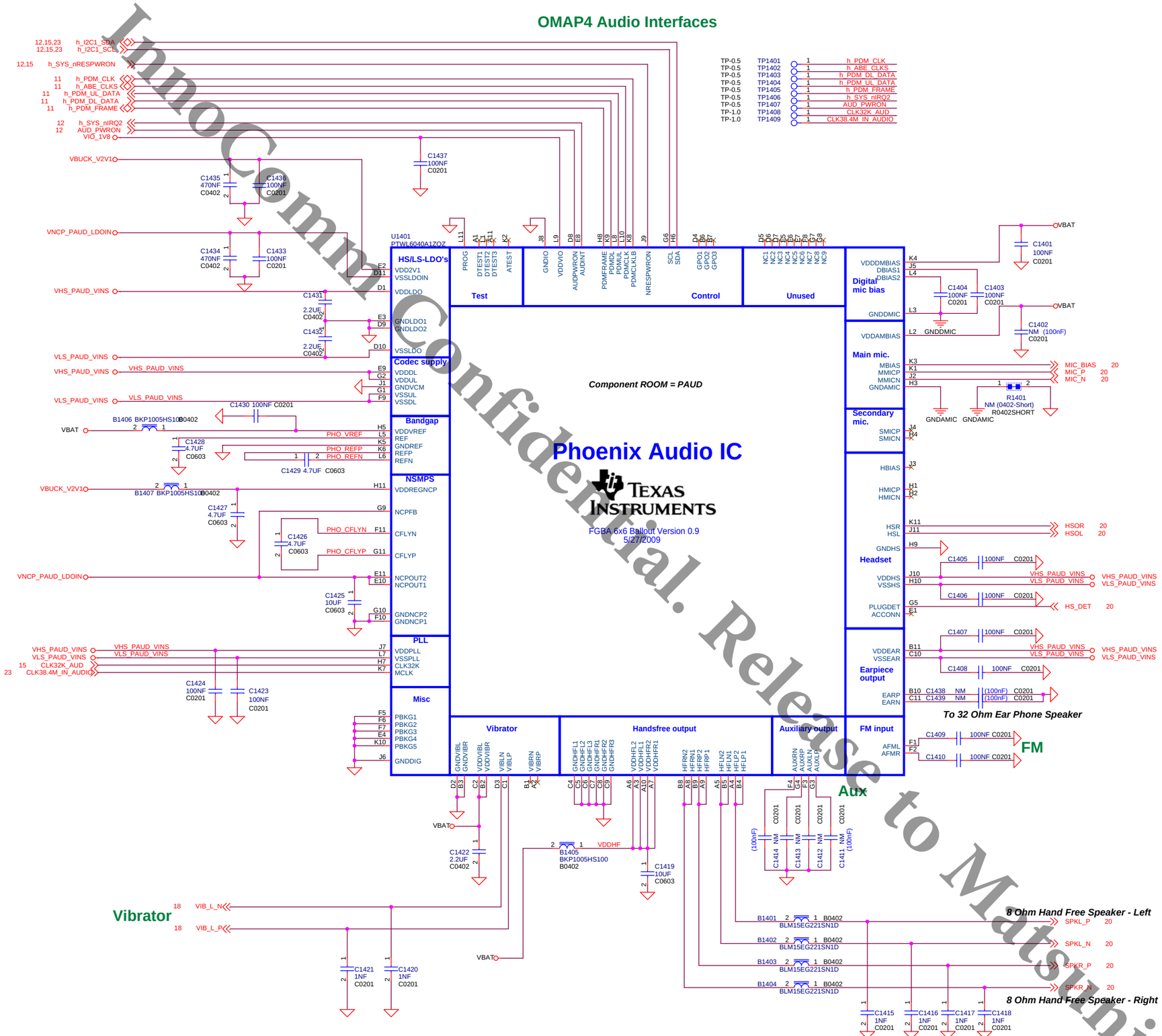

InnoComm Confidential. Release to Matsunichi.

InnoComm Mobile Technology Corp.	
Project Name : Delphi 6107	Title : OMAP 4 Tablet PC (WiFi Version)
Size : A2	Document Number : TWL6040 AUDIO
	Rev : R007
Date: Thursday, May 24, 2012	Sheet : 14 of 30

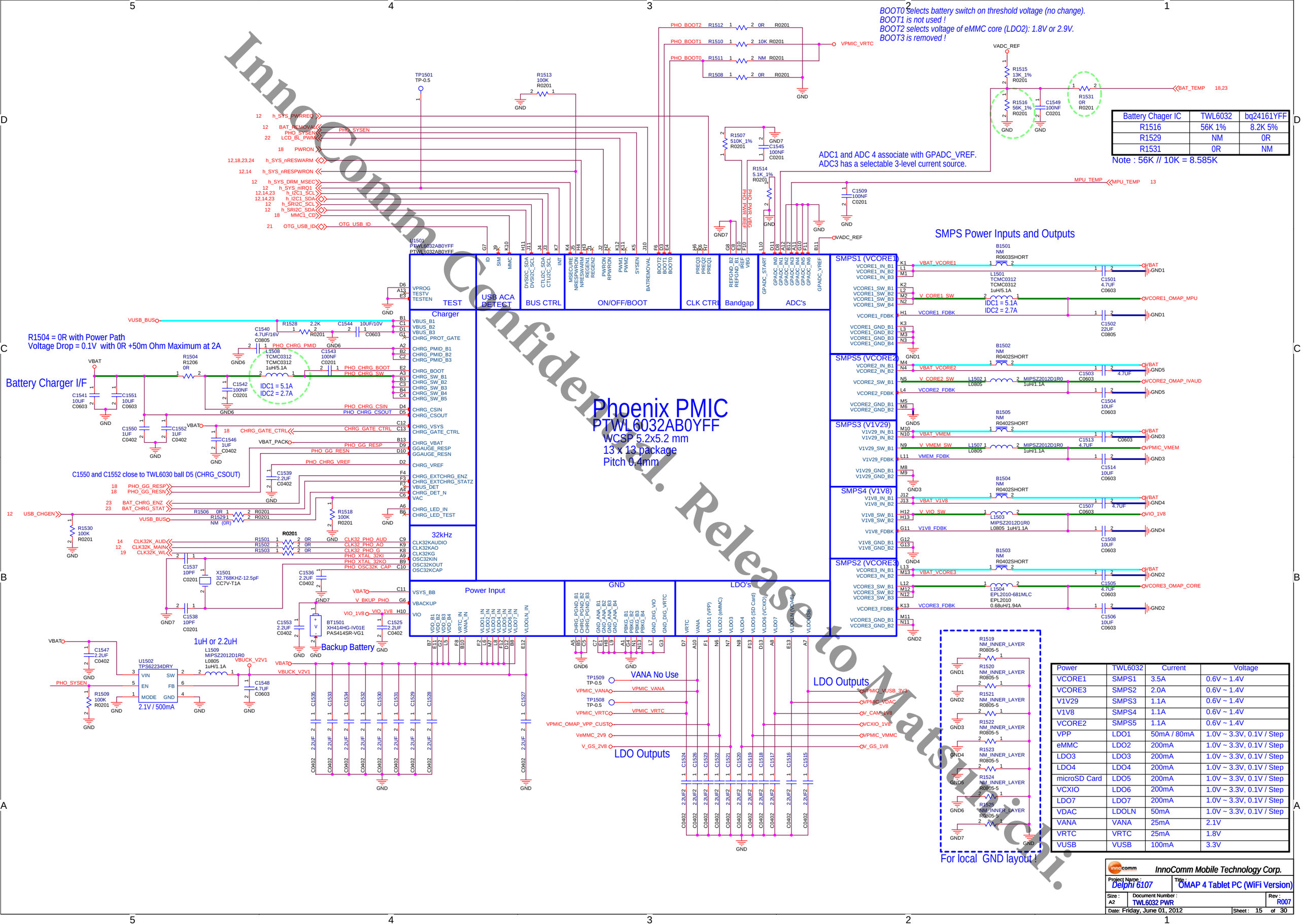

Battery Chager IC	TWL6032	bq24161YFF
R1516	56K 1%	8.2K 5%
R1529	NM	0R
R1531	0R	NM

Note : 56K // 10K = 8.585K

Power	TWL6032	Current	Voltage
VCORE1	SMPS1	3.5A	0.6V ~ 1.4V
VCORE3	SMPS2	2.0A	0.6V ~ 1.4V
V1V29	SMPS3	1.1A	0.6V ~ 1.4V
V1V8	SMPS4	1.1A	0.6V ~ 1.4V
VCORE2	SMPS5	1.1A	0.6V ~ 1.4V
VPP	LDO1	50mA / 80mA	1.0V ~ 3.3V, 0.1V / Step
eMMC	LDO2	200mA	1.0V ~ 3.3V, 0.1V / Step
LDO3	LDO3	200mA	1.0V ~ 3.3V, 0.1V / Step
LDO4	LDO4	200mA	1.0V ~ 3.3V, 0.1V / Step
microSD Card	LDO5	200mA	1.0V ~ 3.3V, 0.1V / Step
VCXIO	LDO6	200mA	1.0V ~ 3.3V, 0.1V / Step
LDO7	LDO7	200mA	1.0V ~ 3.3V, 0.1V / Step
VDAC	LDOLN	50mA	1.0V ~ 3.3V, 0.1V / Step
VANA	VANA	25mA	2.1V
VRTC	VRTC	25mA	1.8V
VUSB	VUSB	100mA	3.3V

innocomm	InnoComm Mobile Technology Corp.
Project Name : Delphi 6107	Title : OMAP 4 Tablet PC (WiFi Version)
Size : A2	Document Number : TWL6032 PWR
Rev : R007	
Date: Friday, June 01, 2012	Sheet : 15 of 30

Ambient Light Sensor

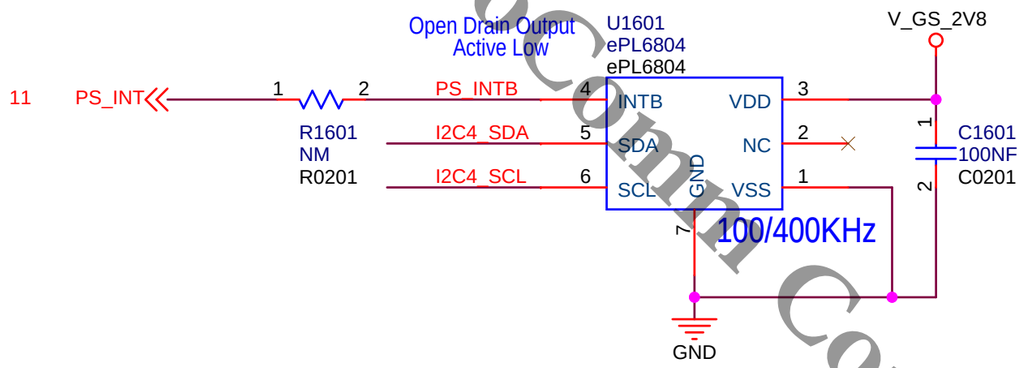

E-Compass
G-sensor

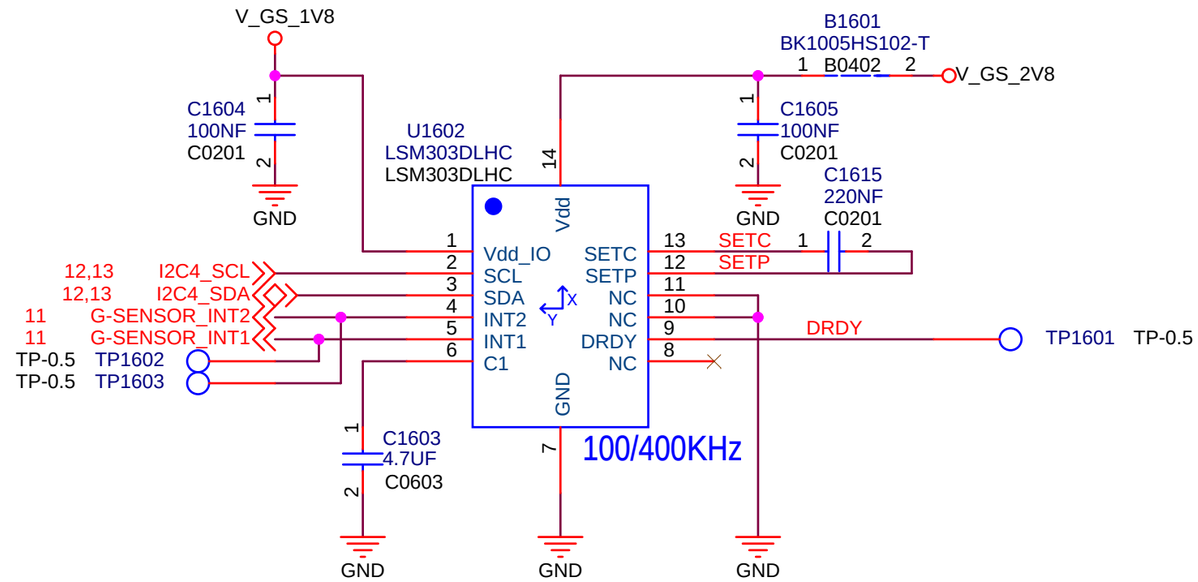

Gyroscope Sensor

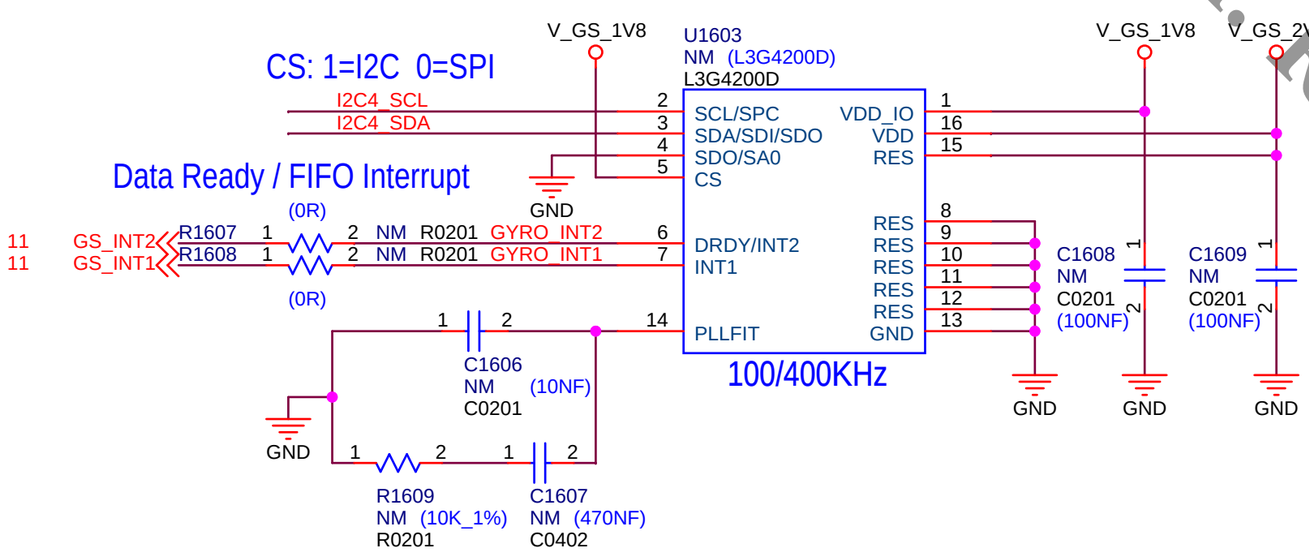

InnoComm Confidential. Release to Matsunichi

innocomm	InnoComm Mobile Technology Corp.	
Project Name : Delphi 6107	Title : OMAP 4 Tablet PC (WiFi Version)	
Size : A4	Document Number : Sensors	Rev : R007
Date: Thursday, May 24, 2012	Sheet : 16 of 30	

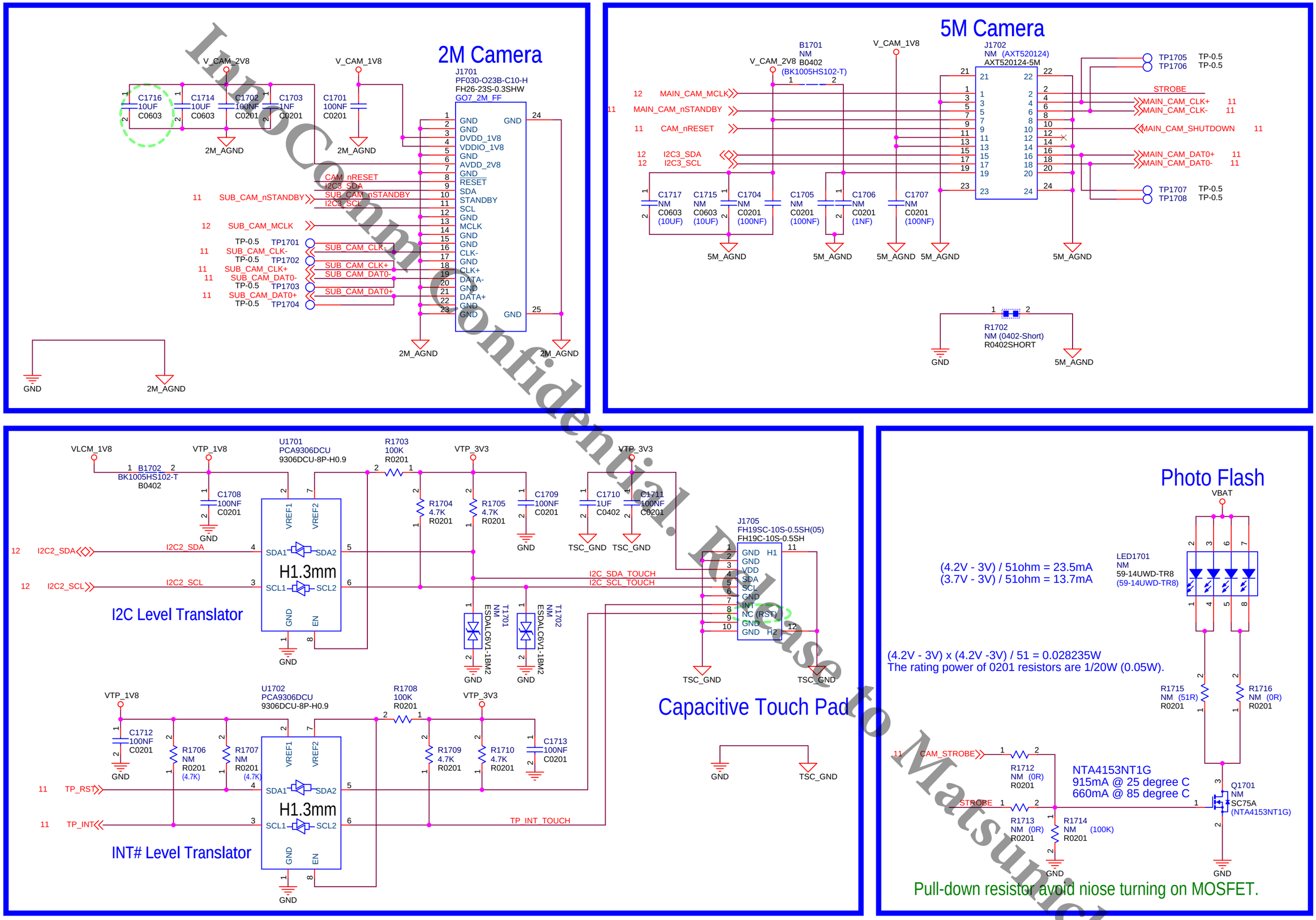

InnoComm Confidential. Release to Matsunichi

InnoComm Mobile Technology Corp.		
Project Name : Delphi 6107	Title : OMAP 4 Tablet PC (WiFi Version)	
Size : A3	Document Number : Camera / Touch Pad	Rev : R007
Date: Thursday, May 31, 2012	Sheet : 17 of 30	

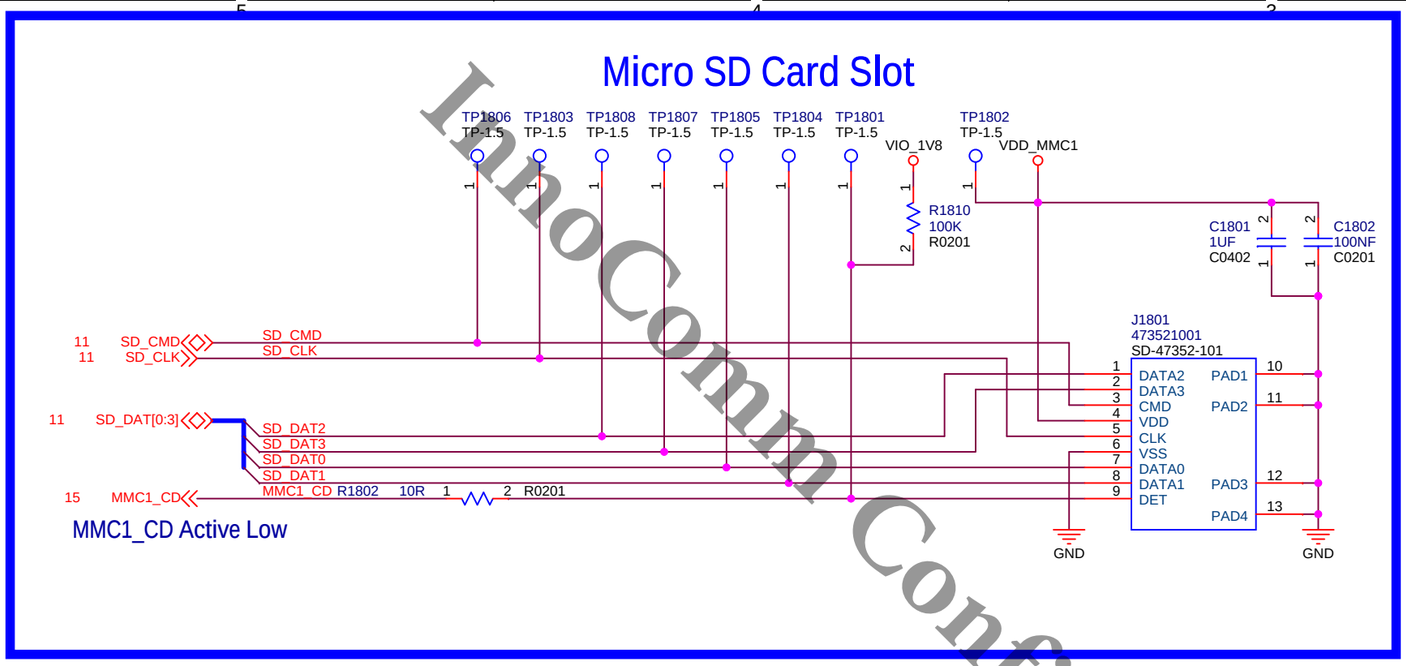

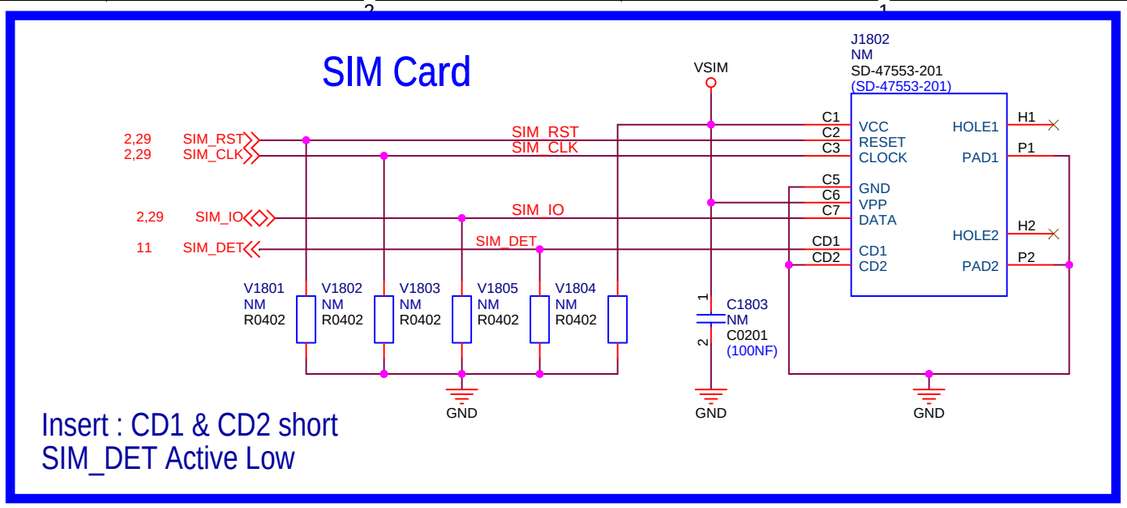

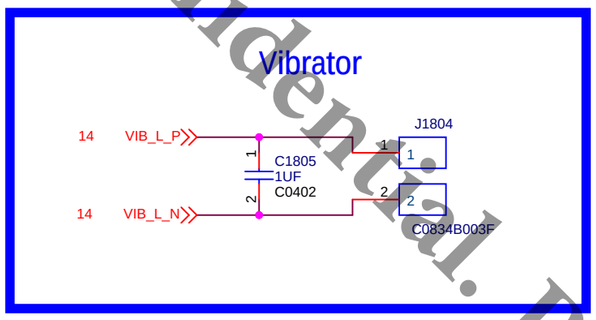

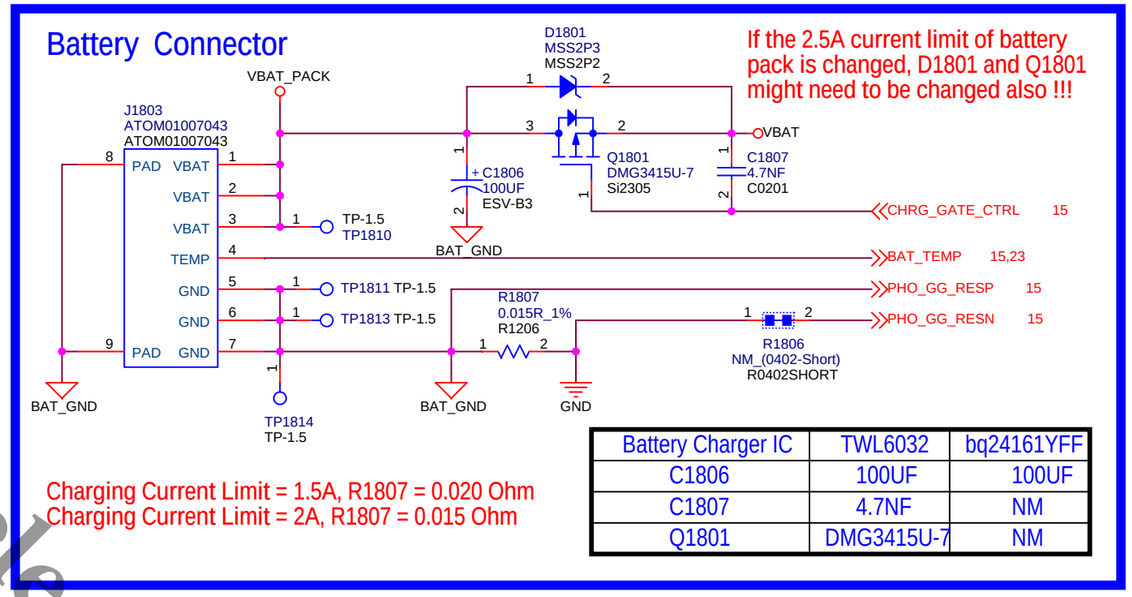

Battery Charger IC	TWL6032	bq24161YFF
C1806	100UF	100UF
C1807	4.7NF	NM
Q1801	DMG3415U-7	NM

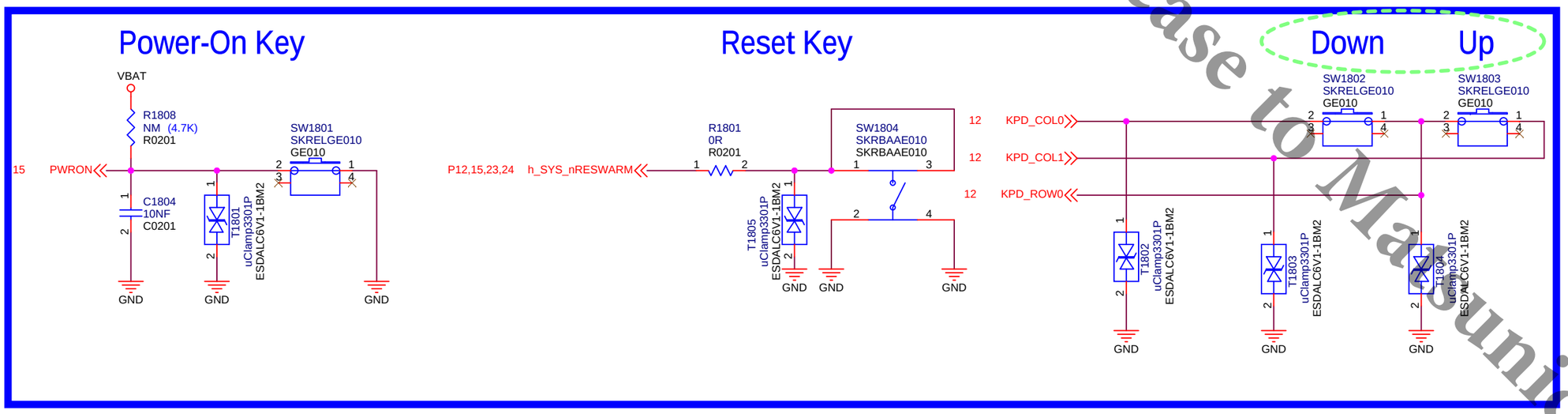

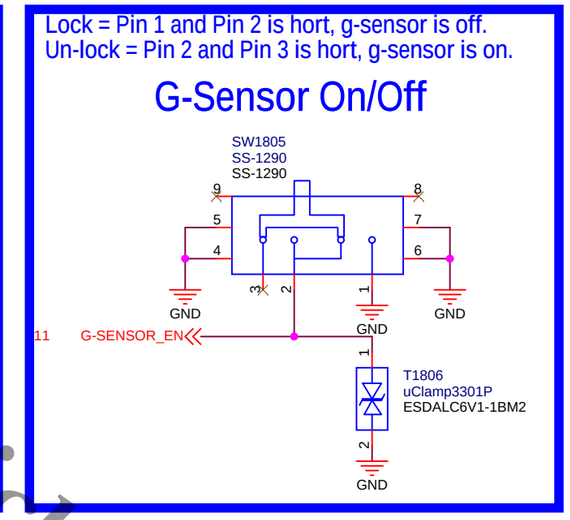

InnoComm Confidential. Release to Manufacturing

InnoComm Mobile Technology Corp.		
Project Name : Delphi 6107	Title : OMAP 4 Tablet PC (WiFi Version)	
Size : A3	Document Number : Peripherals	Rev : R007
Date: Thursday, May 24, 2012	Sheet : 18 of 30	

1- SDIO lines should be held high by the host.
2- TCXO_CLK_REQ_OUT,FREF_CLK_REQ_OUT should be held low by the host (Wired-OR ,active high).
3- VBATLDO_IN_TX_FM can be connected to 1V8 for reduced power consumption during FM TX.
Pls. note that maximum output power will be lower than with Vbat.
4- VBATLDO_IN_PA_BT can be connected to 1V8 for reduced power consumption during BT TX.
Pls. note that maximum output power will be lower than with Vbat.
5- VDD_TCXO_LDO_OUT should feed the TCXO power supply.
6- The SlimBus lines should be held high by the host or tied to GND

TCXO Mode	TCXO_M (E8)	TCXO_P (D8)
AC coupled	VIO	0.2Vpp-1.2Vpp
Digital Clk	0-1.8V	GND

Fref Mode	Fref_M (E5)	Fref_P (E6)
AC coupled	VIO	0.2Vpp-1.2Vpp
Digital Clk	0-1.8V	GND

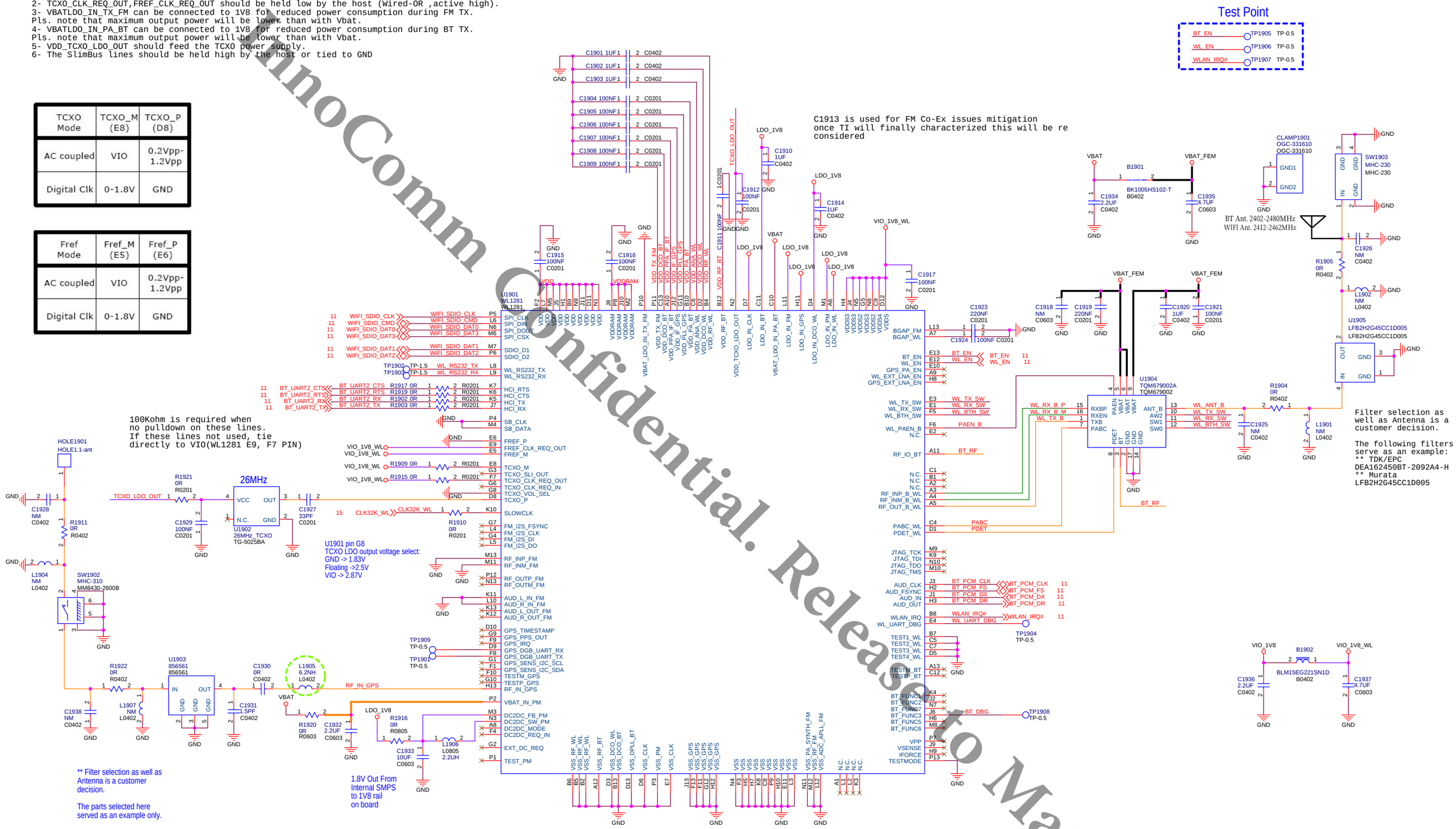

InnoComm Confidential. Released to Matsunichi.

InnoComm Mobile Technology Corp.	
Project Name : Delphi 6107	Title : OMAP 4 Tablet PC (WiFi Version)
Size : A2	Document Number : WL1281 (WiFi+BT+FM+GPS) Rev : R007
Date: Thursday, May 24, 2012	Sheet : 19 of 30

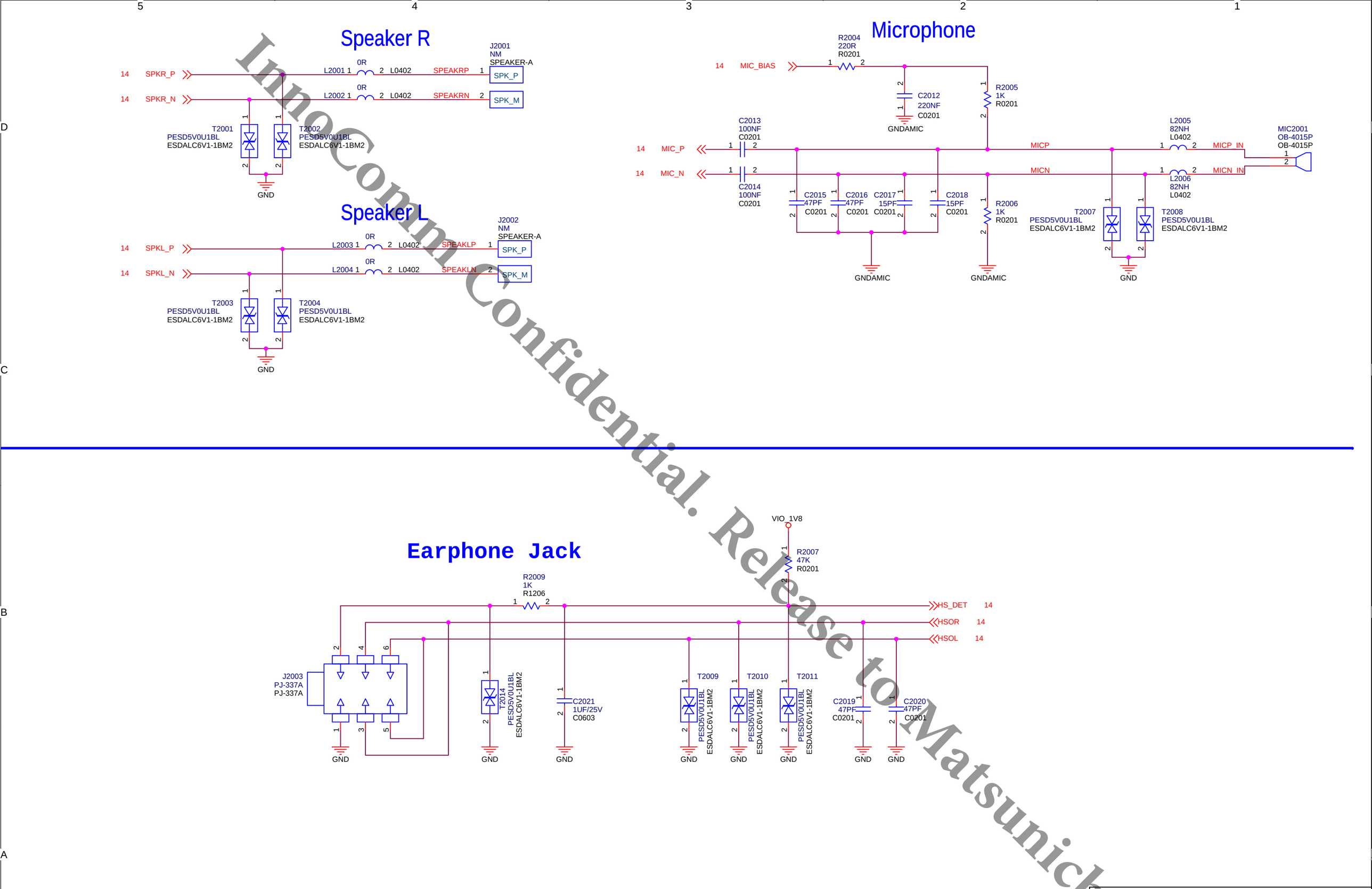

InnoComm Confidential. Release to Matsunichi

InnoComm Mobile Technology Corp.		
Project Name : Delphi 6107	Title : OMAP 4 Tablet PC (WiFi Version)	
Size : A3	Document Number : Audio	Rev : R007
Date: Thursday, May 31, 2012	Sheet : 20 of 30	

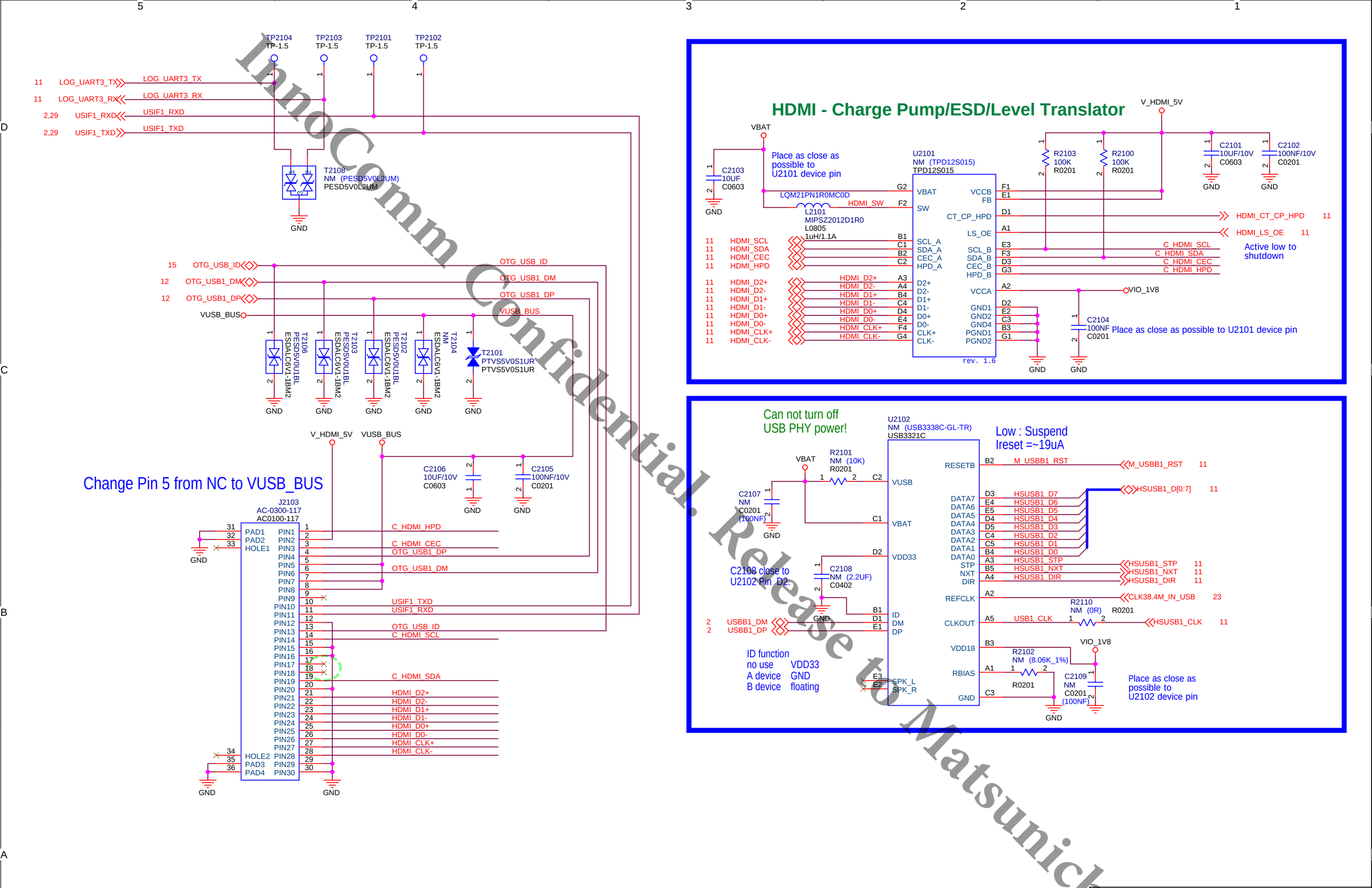

InnoComm Confidential Release to Matsunichi

InnoComm Mobile Technology Corp.	
Project Name : Delphi 6107	Title : OMAP 4 Tablet PC (WiFi Version)
Size : A3	Document Number : HDMI / USB
Rev : R007	
Date: Friday, June 01, 2012	Sheet : 21 of 30

LG 9.7" XGA TFT-LCD LP097X02-SLA3

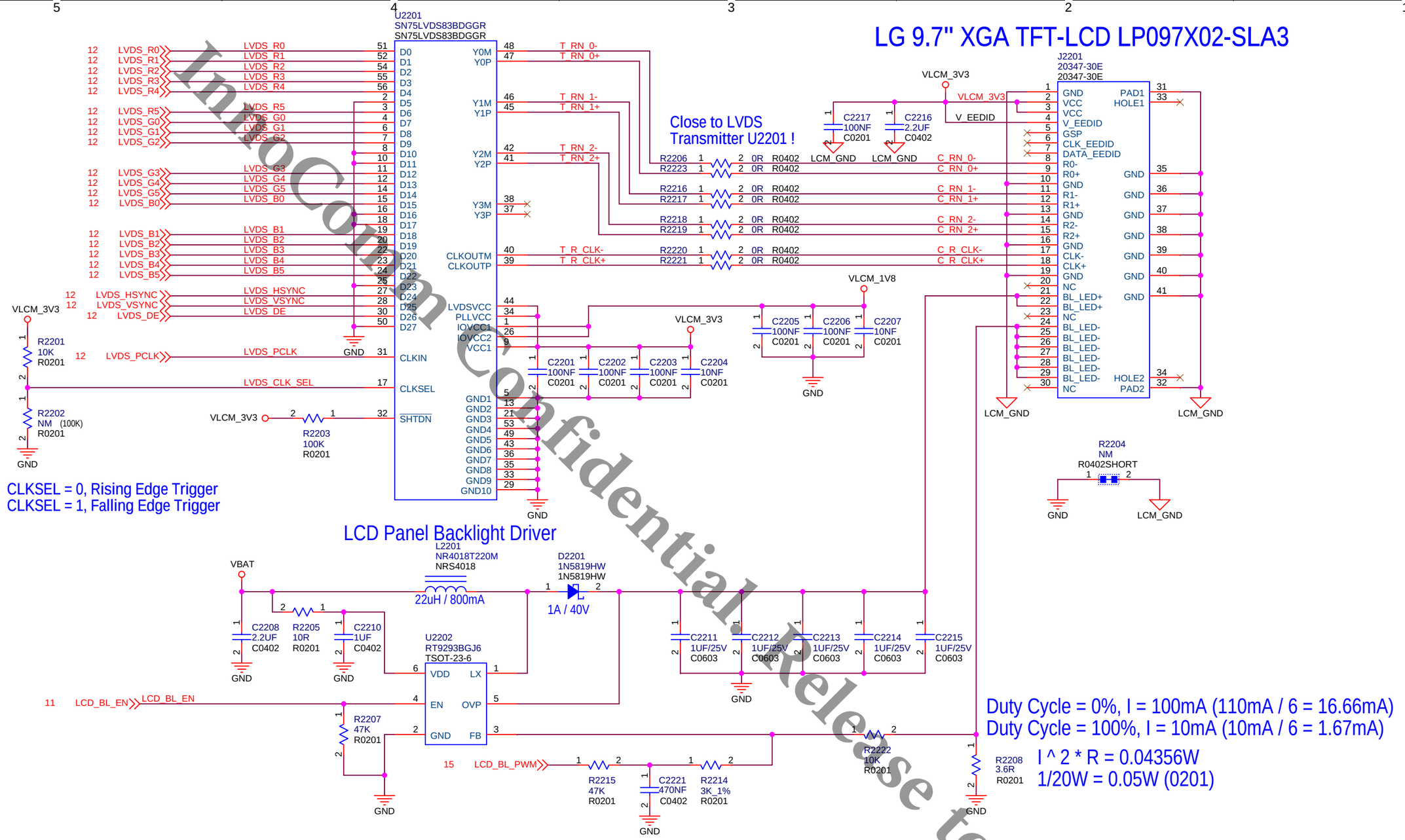

LCD Panel Backlight Driver

Remove Touch Key Circuit !

InnoComm Confidential Release to Matsunichi

InnoComm Mobile Technology Corp.		
Project Name : Delphi 6107	Title : OMAP 4 Tablet PC (WiFi Version)	
Size : A3	Document Number : LCD Panel and Backlight	Rev : R007
Date: Thursday, May 31, 2012	Sheet : 22 of 30	

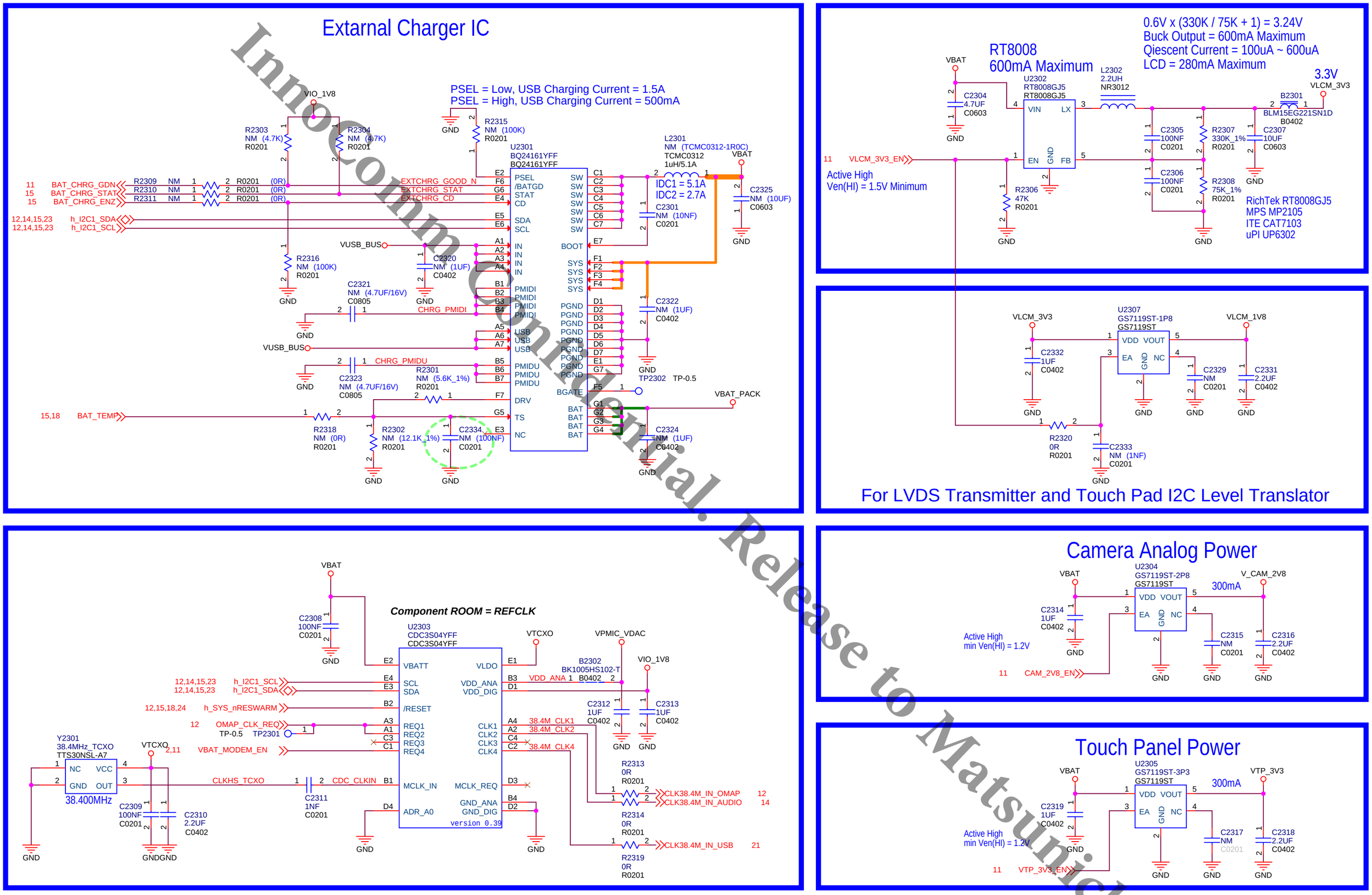

Innocomm Confidential. Release to Matsunichi

InnoComm Mobile Technology Corp.	
Project Name : Delphi 6107	Title : OMAP 4 Tablet PC (WiFi Version)
Size : A3	Document Number : Clock / External LDO
Rev : R007	
Date: Thursday, May 31, 2012	Sheet : 23 of 30

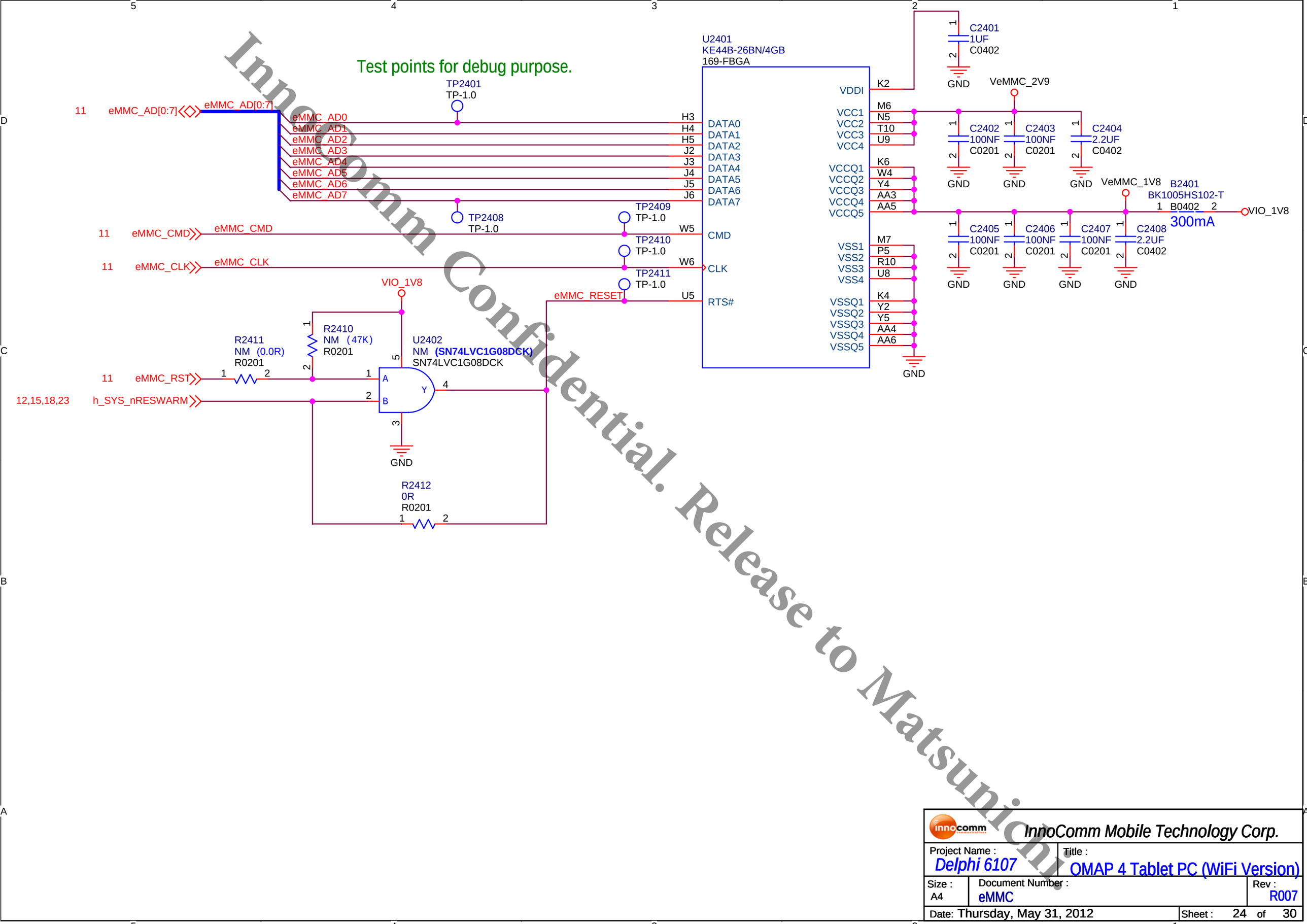

Innocomm Confidential. Release to Matsunichi

InnoComm Mobile Technology Corp.		
Project Name : Delphi 6107	Title : OMAP 4 Tablet PC (WiFi Version)	
Size : A4	Document Number : eMMC	Rev : R007
Date: Thursday, May 31, 2012	Sheet : 24 of 30	

Alternate MMC Card Power Source

Component ROOM = ALT_MMC_PWR

2:1 R-Mux selects both OMAP MMC & SD/MMC Card's operating voltage source from:
1) PHX PMIX for 200mA capacity
2) Discrete LDO for 400mA capacity needed for SDR50 IF (100MHz) support per SD 3.0 spec & is switchable via SYSBOOT7 for 1.8V or 3.0V.
3) Populate R1 & R2 per table for OMAP Overdrive Power Scheme without SYSBOOT7 FET & parallel R.
Connect directly to VBAT_PROC for VIN & enable with EN_VLDO_VMEM.

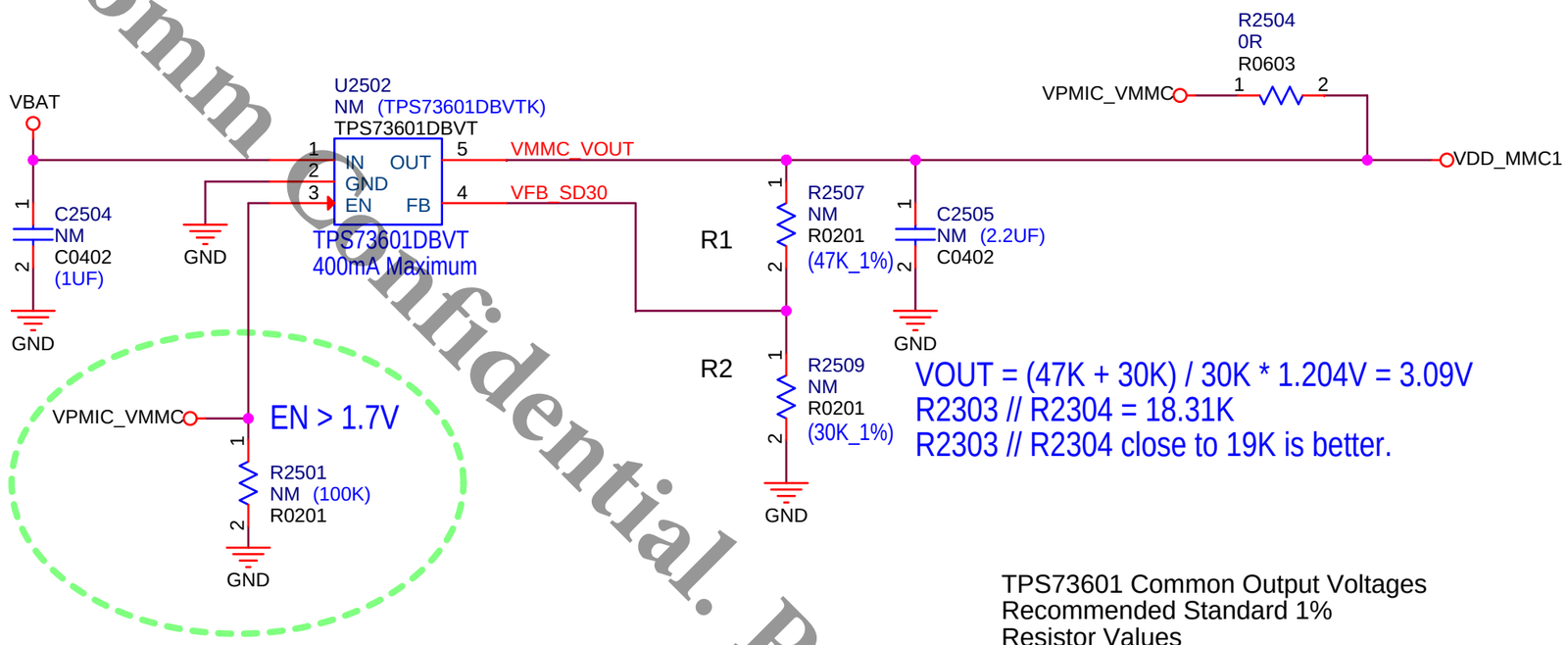

VOUT = (47K + 30K) / 30K * 1.204V = 3.09V
R2303 // R2304 = 18.31K
R2303 // R2304 close to 19K is better.

TPS73601 Common Output Voltages
Recommended Standard 1%
Resistor Values

Output Voltage	R1	R2
1.2V	0	DNI
1.8V	28.0K	56.2K
3.0V	46.4K	30.9K
3.3V	52.3K	30.1K

Iout = 400mA for VDO = 0.2V
Vout = 1.204 * ((R1 + R2)/R2)
R1|| R2 = 19K for best accuracy

Innocomm Confidential. Release to Matsunichi.

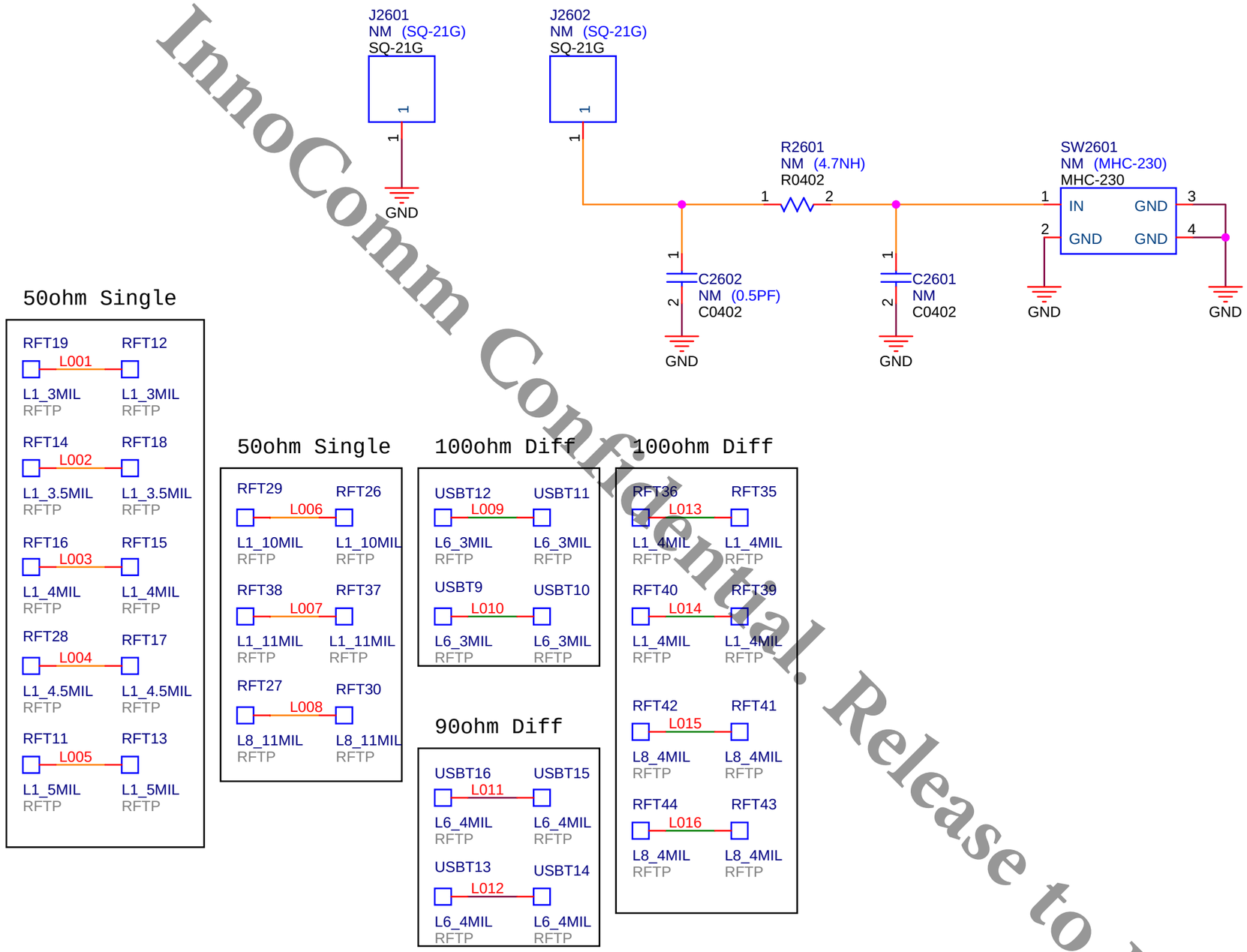

InnoComm Confidential. Release to Matsunichi

InnoComm Mobile Technology Corp.		
Project Name : Delphi 6107	Title : OMAP 4 Tablet PC (WiFi Version)	
Size : A4	Document Number : Modem Antenna	Rev : R007
Date: Thursday, May 24, 2012	Sheet : 26 of 30	

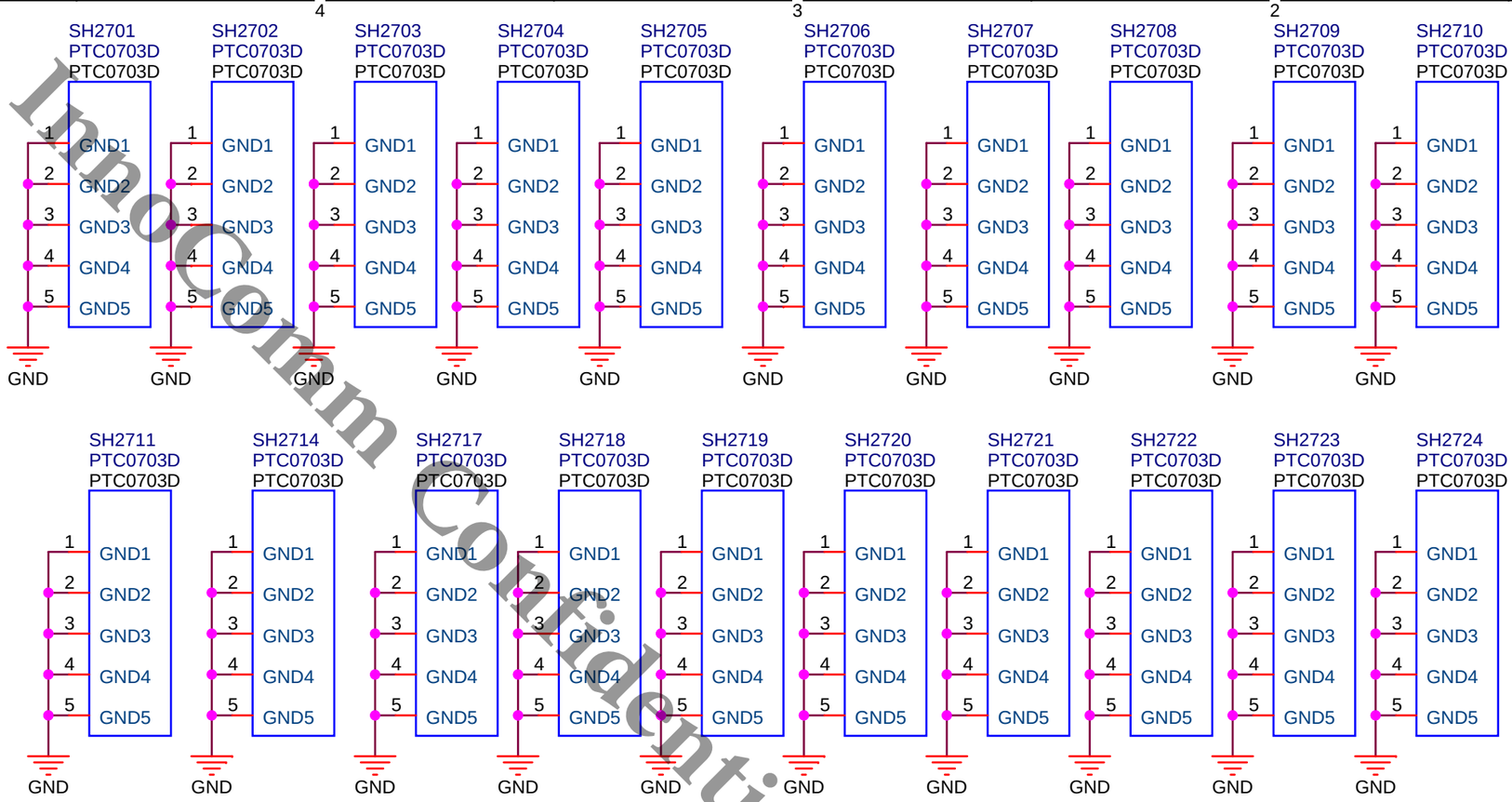

Screw Hole

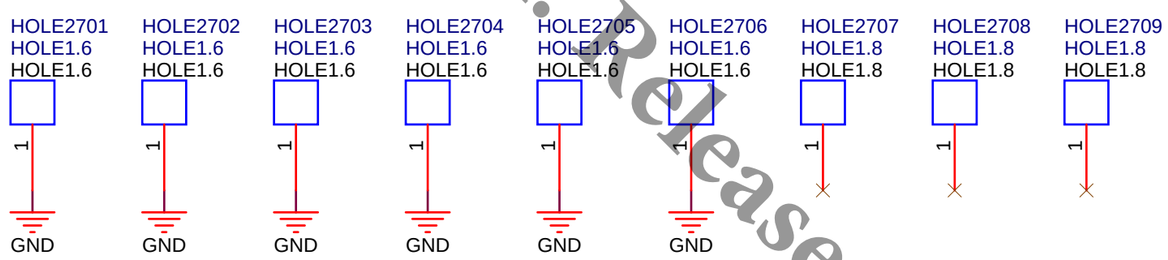

Fiducial Mark

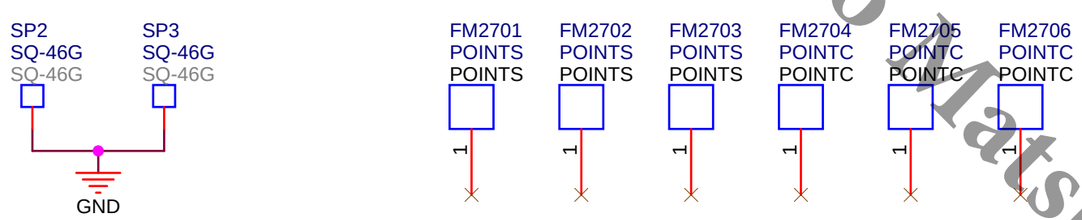

InnoComm Confidential
For Release to Matsunichi

InnoComm Mobile Technology Corp.		
Project Name : Delphi 6107	Title : OMAP 4 Tablet PC (WiFi Version)	
Size : A4	Document Number : Mechanical	Rev : R007
Date: Thursday, May 24, 2012	Sheet : 27 of 30	

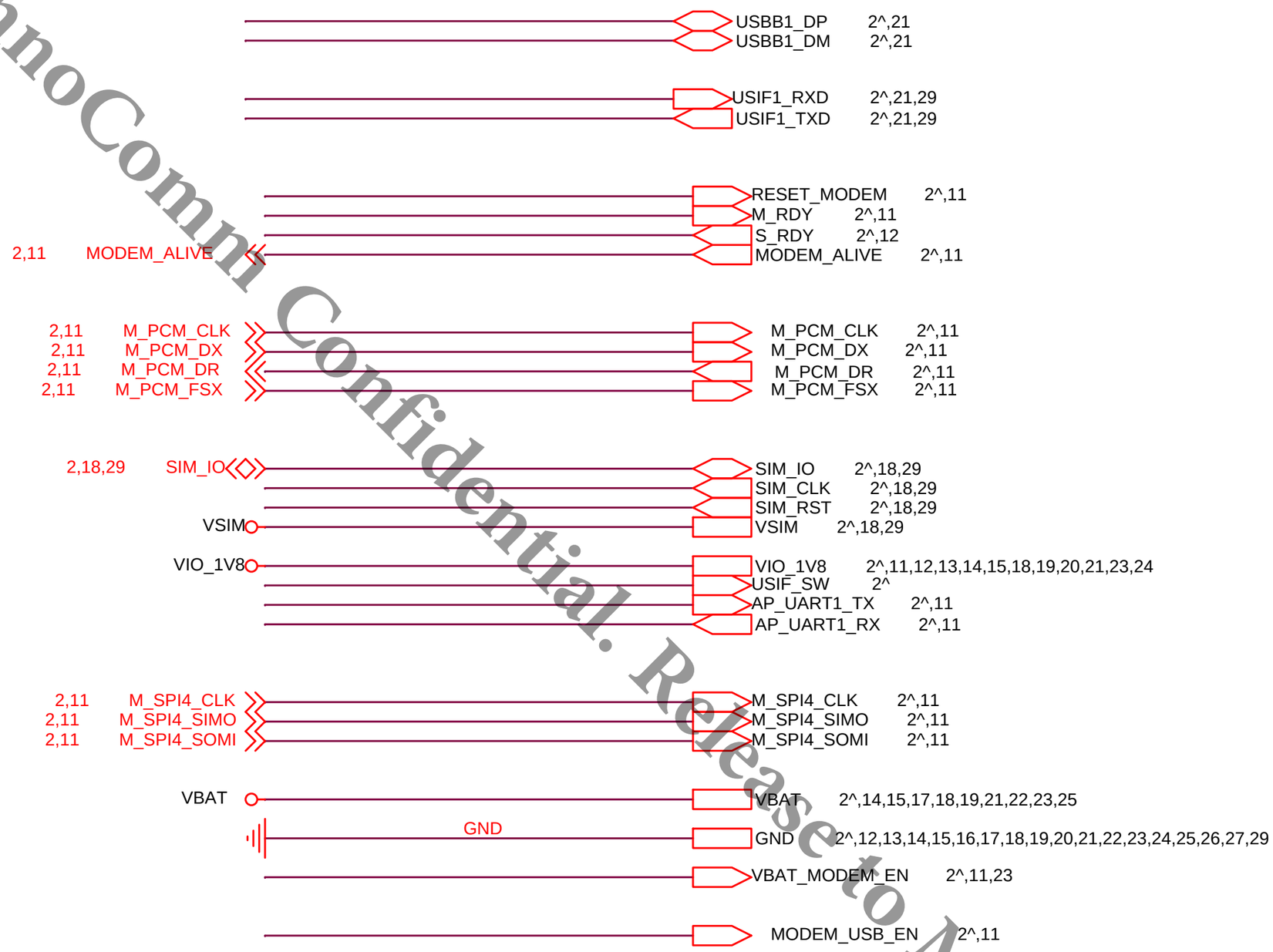

InnoComm Confidential. Release to Matsunichi.

InnoComm Mobile Technology Corp.		
Project Name : Delphi 6107	Title : OMAP 4 Tablet PC (WiFi Version)	
Size : A	Document Number : Modem Interface	Rev : R007
Date: Thursday, May 24, 2012	Sheet : 28 of 30	

LGA PCIe PCB Adaptor

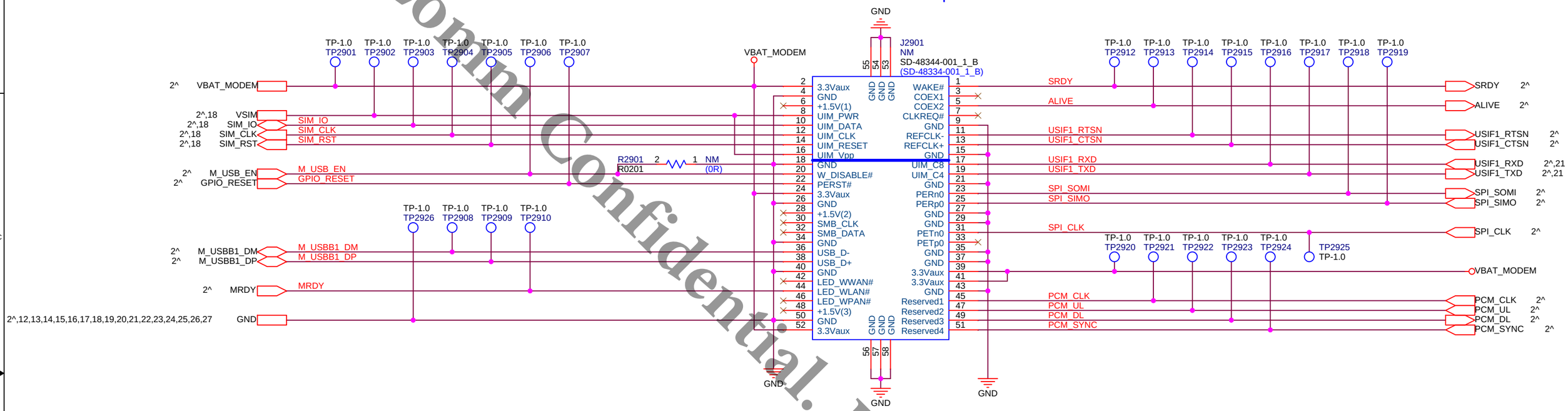

Amazon 3 do not have MODEM_ON and SIM_DET Signal !

InnoComm Confidential. Release to Matsunichi

InnoComm Mobile Technology Corp.			
Project Name : Delphi 6107	Title : OMAP 4 Tablet PC (WiFi Version)		
Size : A3	Document Number : Modem PCIe Slot		Rev : R007
Date: Thursday, May 24, 2012		Sheet : 29 of 30	