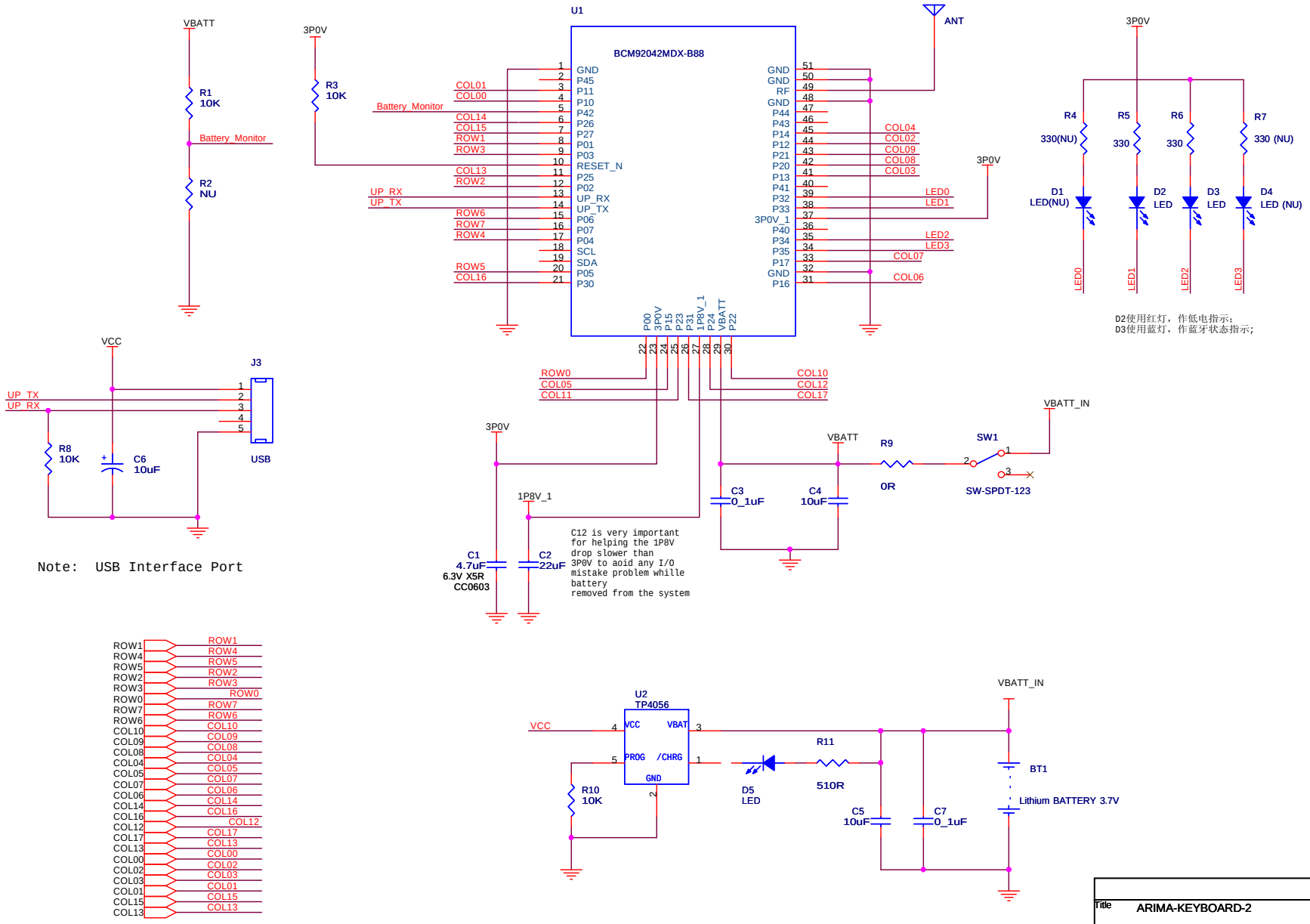

Title	ARIMA-KEYBOARD-2
Size	Document Number
Rev	V1
Date:	Saturday, February 05, 2011
Sheet	1 of 1

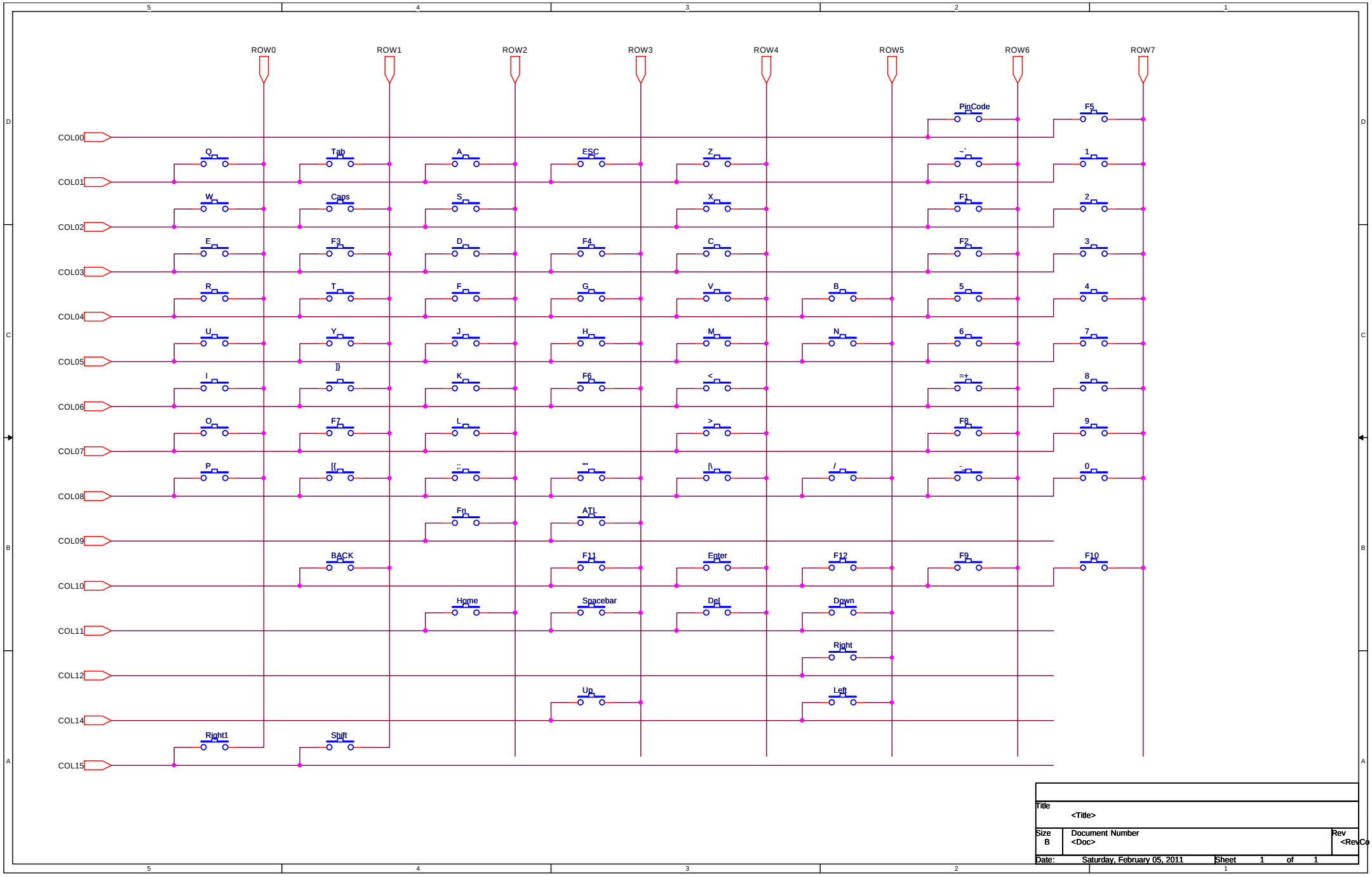
ROW0
ROW1
ROW2
ROW3
ROW4
ROW5
ROW6
ROW7
COL00
COL01
COL02
COL03
COL04
COL05
COL06
COL07
COL08
COL09
COL10
COL11
COL12
COL14
COL15
PinCode
F5
Q
Tab
A
ESC
Z
~`
1
W
Caps
S
X
F1
2
E
F3
D
F4
C
F2
3
R
T
F
G
V
B
5
4
U
Y
J
H
M
N
6
7
I
]}
K
F6
<
=+
8
O
F7
L
>
F8
9
P
[{
;:
""
|\
/
-_
0
Fn
ATL
BACK
F11
Enter
F12
F9
F10
Home
Spacebar
Del
Down
Right
Up
Left
Right1
Shift
Title
<Title>
Size
B
Document Number
<Doc>
Rev
<RevCo
Date:
Saturday, February 05, 2011
Sheet
1
of
1