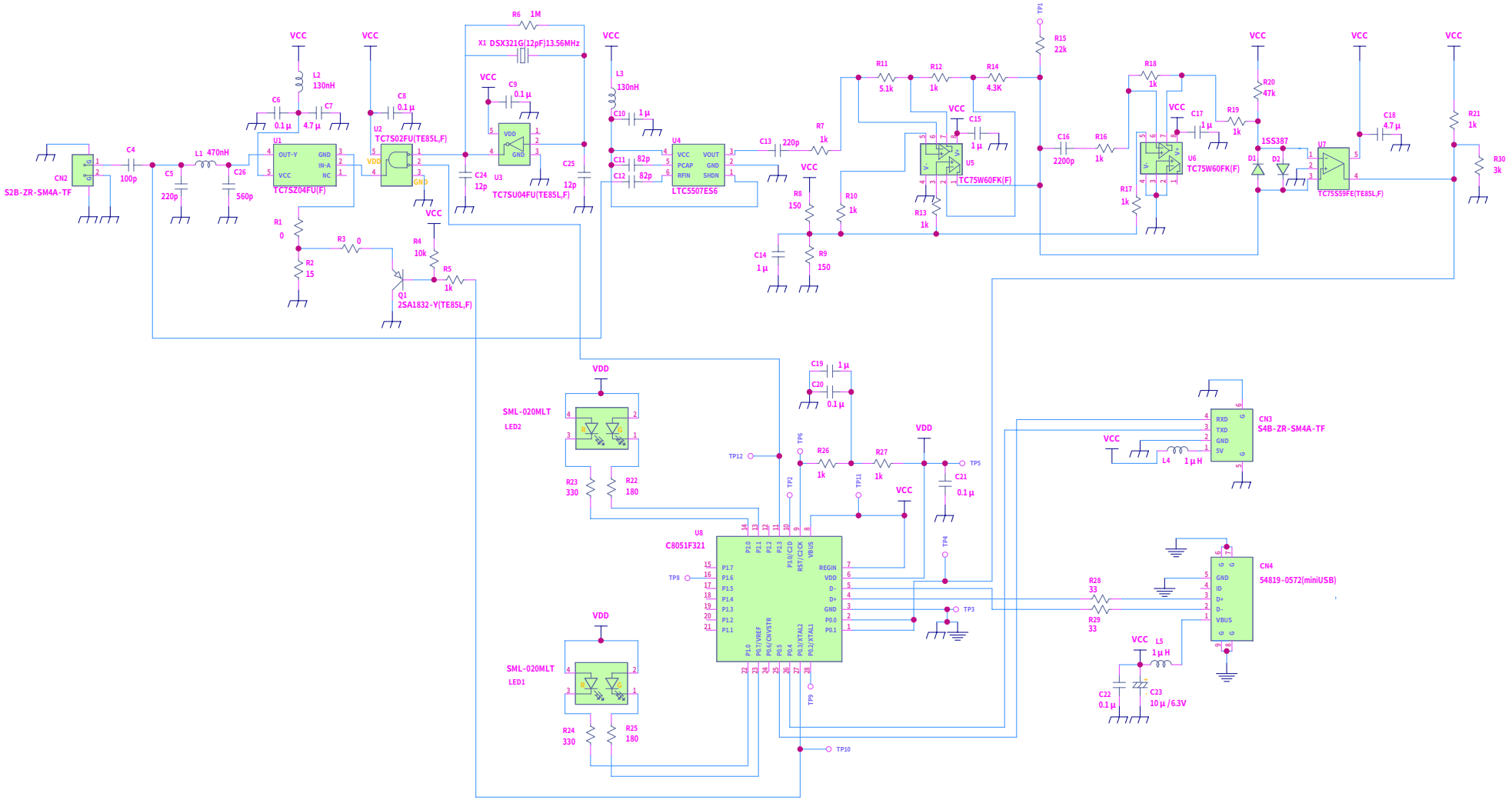

Title	MMRW-MD-H01(13.56MHz対応)		Note 13.56MHz
Size A3	DOC NO. D07011A-1/E	Revision {Revision}	
MMRW-MD-H101(1356)-080723.schfile2008/07/23 9:57:47		{SHNO}	

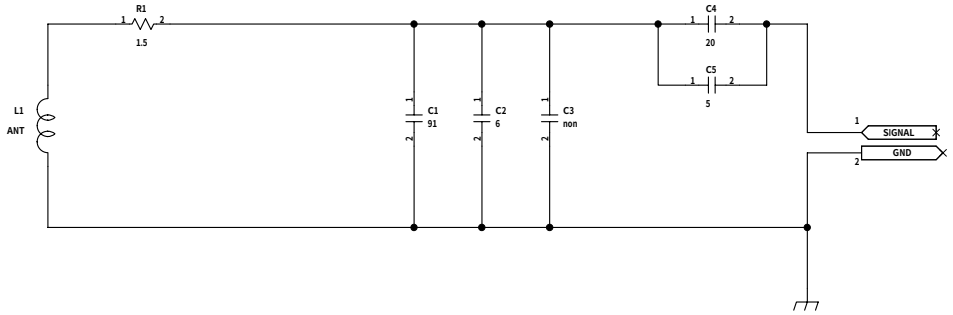

Title MMATH-4570b2			Note {NOTE}
Size A3	DOC NO. D07014A-2/C	Revision 1.01	
MMmoD07014A-2_A.schfile	2008/05/16 16:45:02	{SHNO}	