充电盒上内托1：1

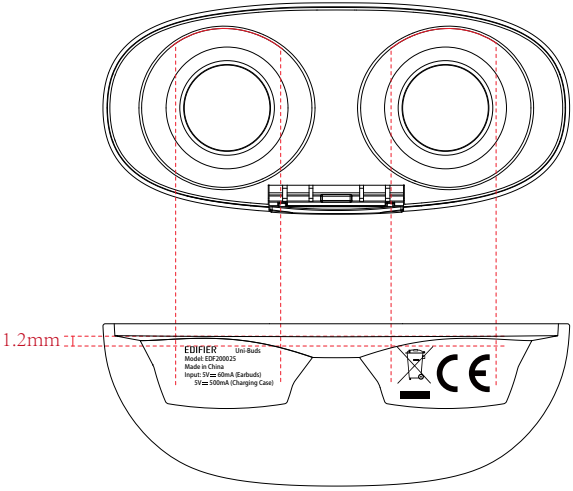

充电盒上内托1：1

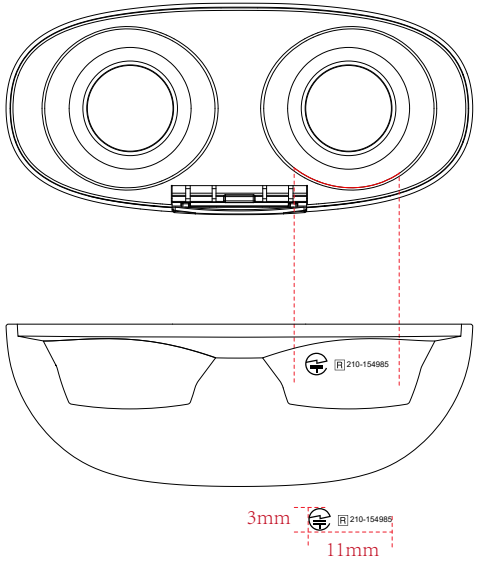

A2版：增加FCC IC号和修改垃圾桶、CE标

A1版：增加日本MIC认证标

物料名称	充电盒上内托
物料编码	DK-UNIBUS-00XX
工艺要求	激光雕刻产品信息

充电盒上内托: 激光雕刻产品信息

红色部分左右居中对齐

文件编号	EDF/JS-TTZ-		版次 A2
文件名称	Uni-Buds充电盒上内托激光雕刻		
绘　　制			
审　　核			东莞市漫步者
批　　准			科技有限公司

Label location: FCC ID printed in the user manual page 35.

Bluetooth®, ®

The Bluetooth® word mark and logos are registered trademarks owned by Bluetooth SIG, Inc. and any use of such marks by EDIFIER is under license. Other trademarks and trade names are those of their respective owners.

FCC statement:
This device complies with Part 15 of the FCC Rules. Operation is subject to the following two conditions:
(1) this device may not cause harmful interference, and (2) this device must accept any interference received, including interference that may cause undesired operation.
IC statement: CAN ICES-3(B)/NMB-3(B).
FCC ID: Z9G-EDF146
IC: 10004A-EDF146

Declaration for EU
Frequency Band: 2400Mhz - 2483.5Mhz
RF Power Output: ≤20 dBm (EIRP)
There is no restriction of use.

Hereby, Edifier International Limited declares that the radio equipment type EDF200025 is in compliance with Directive 2014/53/EU. The full text of the EU declaration of conformity is available at the following internet address: https://www.edifier.com/int/eu-doc.html

Rated input: 5V⎓60mA(Earbuds) 5V⎓500mA(Charging case)

R 210-154985