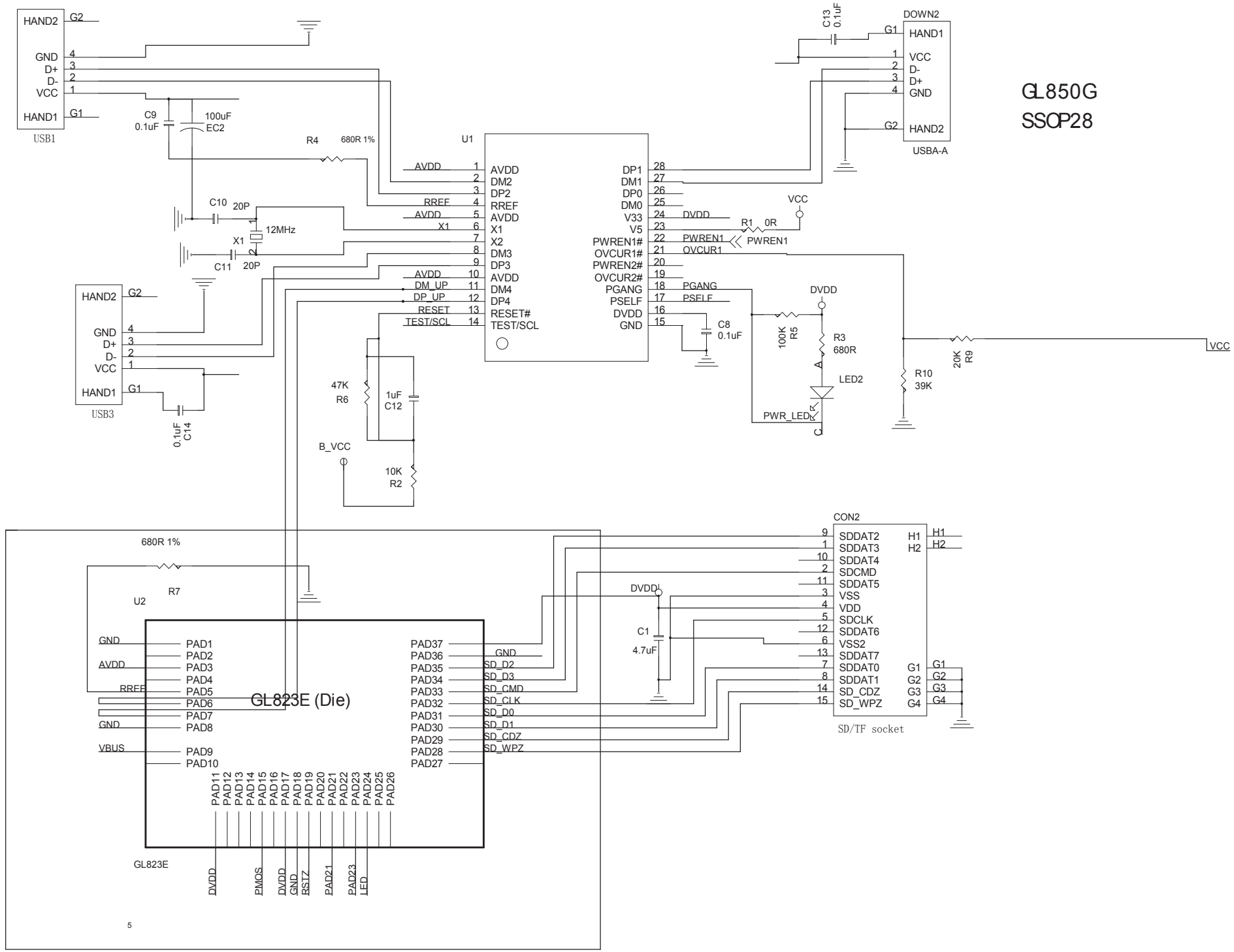
GL850G
SSOP28
USB1
HAND2
HAND1
GND
D+
D-
VCC
C9
0.1uF
100uF
EC2
R4
680R 1%
U1
AVDD
DM2
DP2
RREF
X1
X2
DM3
DP3
DM4
DP4
RESET#
TEST/SCL
DM_UP
DP_UP
RESET
DP1
DM1
DP0
DM0
V33
V5
PWREN1#
OVCUR1#
PWREN2#
OVCUR2#
PGANG
PSELF
DVDD
C10 20P
12MHz
C11 20P
C13
0.1uF
DOWN2
USBA-A
R1 0R
PWREN1
OVCUR1
C8
0.1uF
100K
R5
R3
680R
LED2
PWR_LED
R10
39K
20K
R9
VCC
USB3
0.1uF
C14
47K
R6
1uF
C12
B_VCC
10K
R2
680R 1%
R7
U2
GL823E (Die)
PAD1
PAD2
PAD3
PAD4
PAD5
PAD6
PAD7
PAD8
PAD9
PAD10
PAD11
PAD12
PAD13
PAD14
PAD15
PAD16
PAD17
PAD18
PAD19
PAD20
PAD21
PAD22
PAD23
PAD24
PAD25
PAD26
PAD27
PAD28
PAD29
PAD30
PAD31
PAD32
PAD33
PAD34
PAD35
PAD36
PAD37
SD_D2
SD_D3
SD_CMD
SD_CLK
SD_D0
SD_D1
SD_CDZ
SD_WPZ
VBUS
GL823E
DVDD
PMOS
RSTZ
LED
C1
4.7uF
CON2
SDDAT2
SDDAT3
SDDAT4
SDCMD
SDDAT5
VSS
VDD
SDCLK
SDDAT6
VSS2
SDDAT7
SDDAT0
SDDAT1
SD_CDZ
SD_WPZ
SD/TF socket