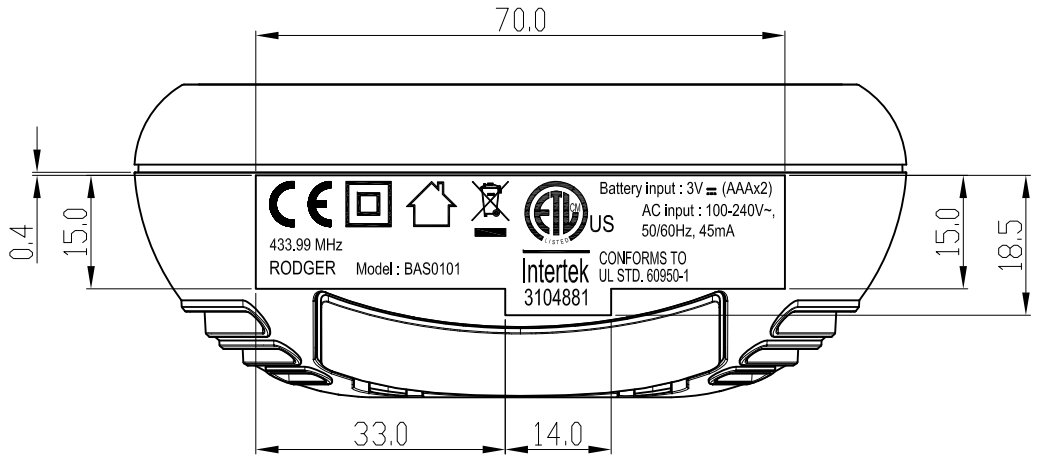

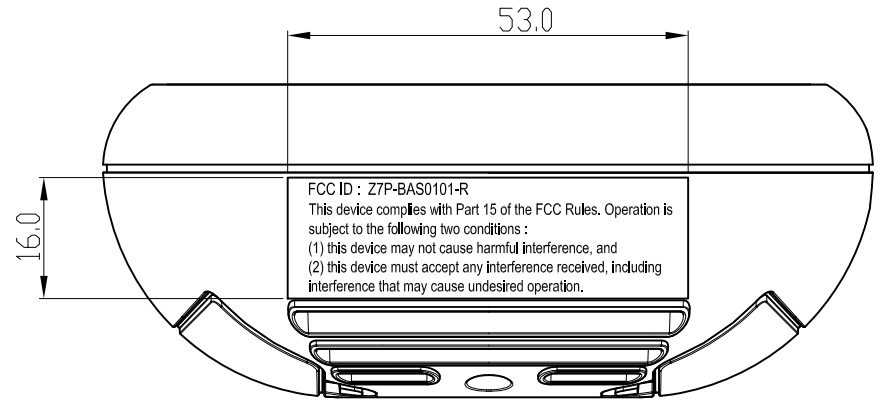

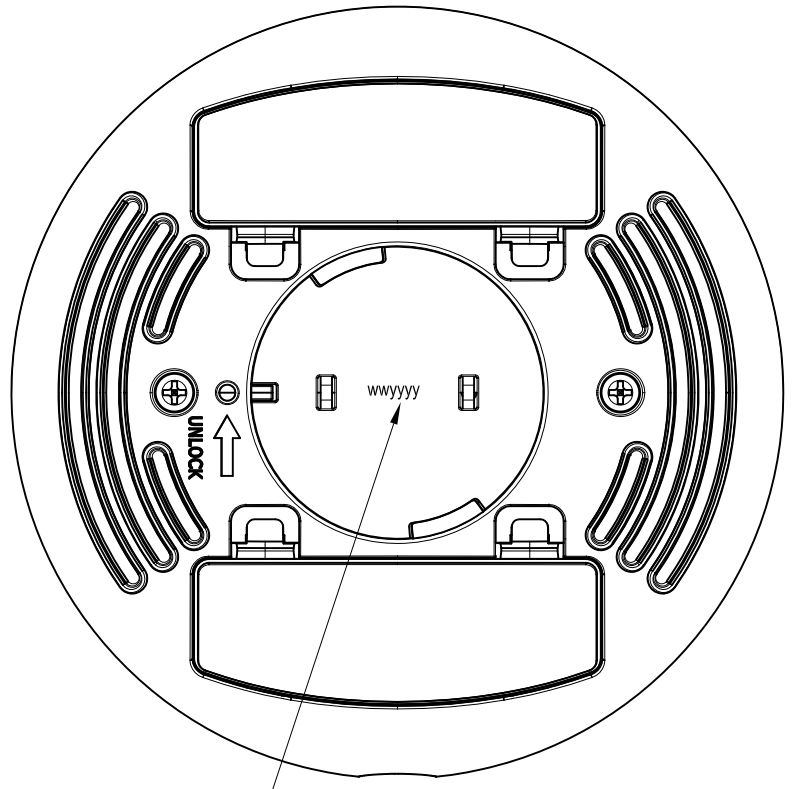

ww represent week
yyyy represent year
This date code will be stamped.

P/E

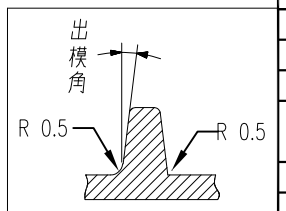

	除特別注明外
(1)	出模角: 塑膠: 每边1° 電木: 每边3° 铸铝: 每边5°
(2)	除去所有披鋒, 尖角做圓R
(3)	沒有注明的圓角爲R 0.5 0.5ⓂⓂ
(4)	小数位: X.X ± 0.ⓂⓂ X.XX ± 0.05 角度: ± 0.5°
(5)	重要尺寸以△表示, 此圖共___個
(6)	請勿直接量度圖紙尺寸.

REV	DESCRIPTION OF CHANGE	ENGR	DATE
0	INITIAL RELEASE	WPZHONG	Nov25.11

PLASTICS SHRINKAGE REFERENCE (IF ANY): 缩水数

UNLESS OTHERWISE SPECIFIED DRAFT : P:1° PF:3° AL:5° RADIUS : 0.5
DIM.TOL. : X. ±1 X.X ± 0.1 X.XX ± 0.05 ANGLE TOL. : ± 0.5°

AUTHENTICATION		
	NAME	DATE
DRAWN BY		
CHECKED BY		
APPROVED BY		

THIS DOCUMENT MAY NOT BE REPRODUCED OR UTILIZED IN ANY WAY WITHOUT THE PRIOR WRITTEN PERMISSION OF KEENLEAGUE MANUFACTURING LTD.

KEENLEAGUE MANUFACTURING LTD.

SCALE: 1:1	MATERIAL: N/A	MODEL NO: PA100
QUANTITY: 1	FINISH: N/A	TITLE: RATING 字唛图1
PROJECTION:	CODE NO: N/A	DWG NO: PA100-L01 / REV: 0

DO NOT SCALE DRAWING | DIMENSIONS IN:MM | SHEET 1 OF 1