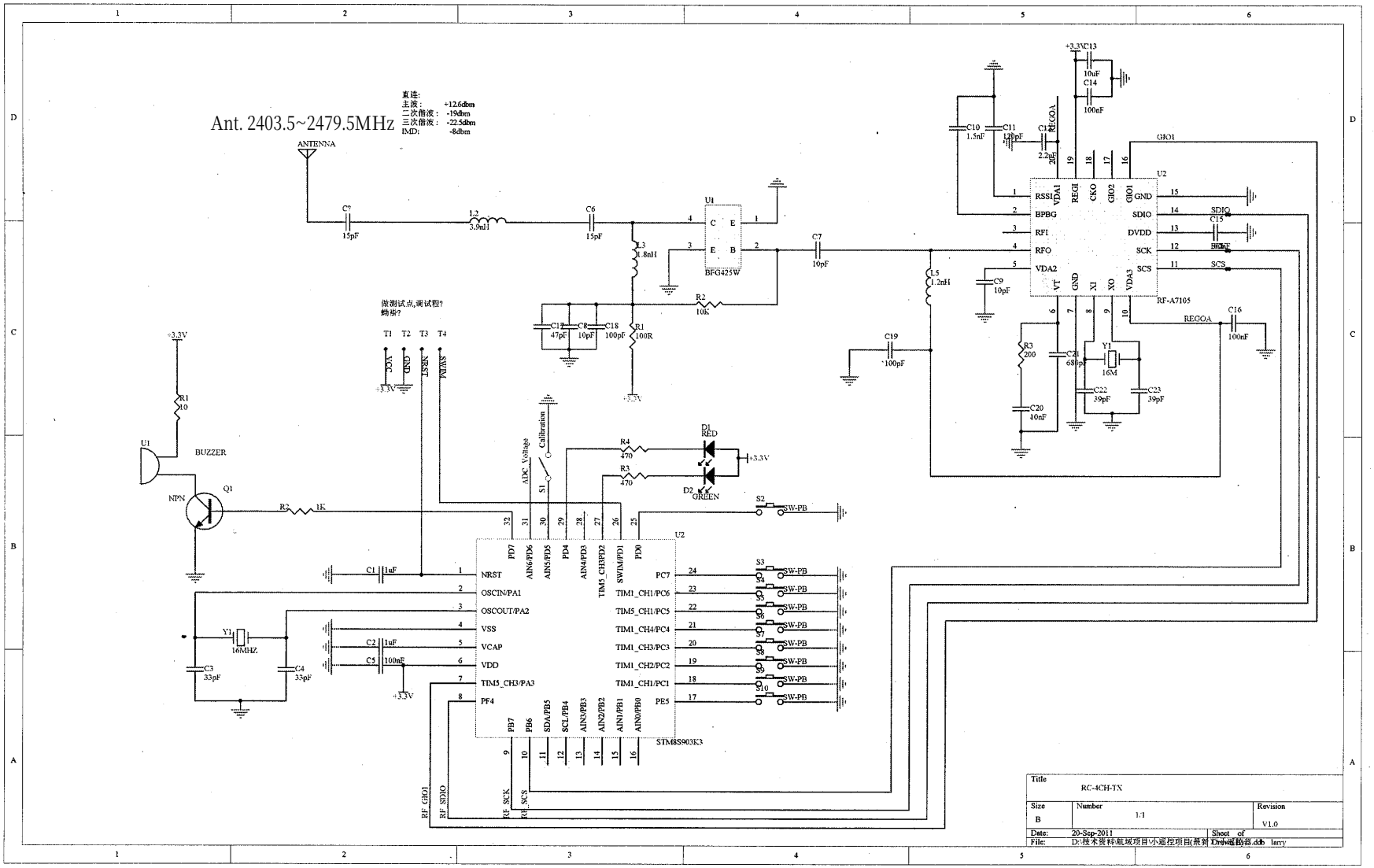

Title	RC-4CH-TX	
Size B	Number 1:1	Revision V1.0
Date: 20-Sep-2011		Sheet of
File: D:\技术资料\航模项目\小遥控项目(最新)\Drawing\遥控器.ddb		Drawn By: larry