PDF created with pdfFactory Pro trial version www.pdffactory.com

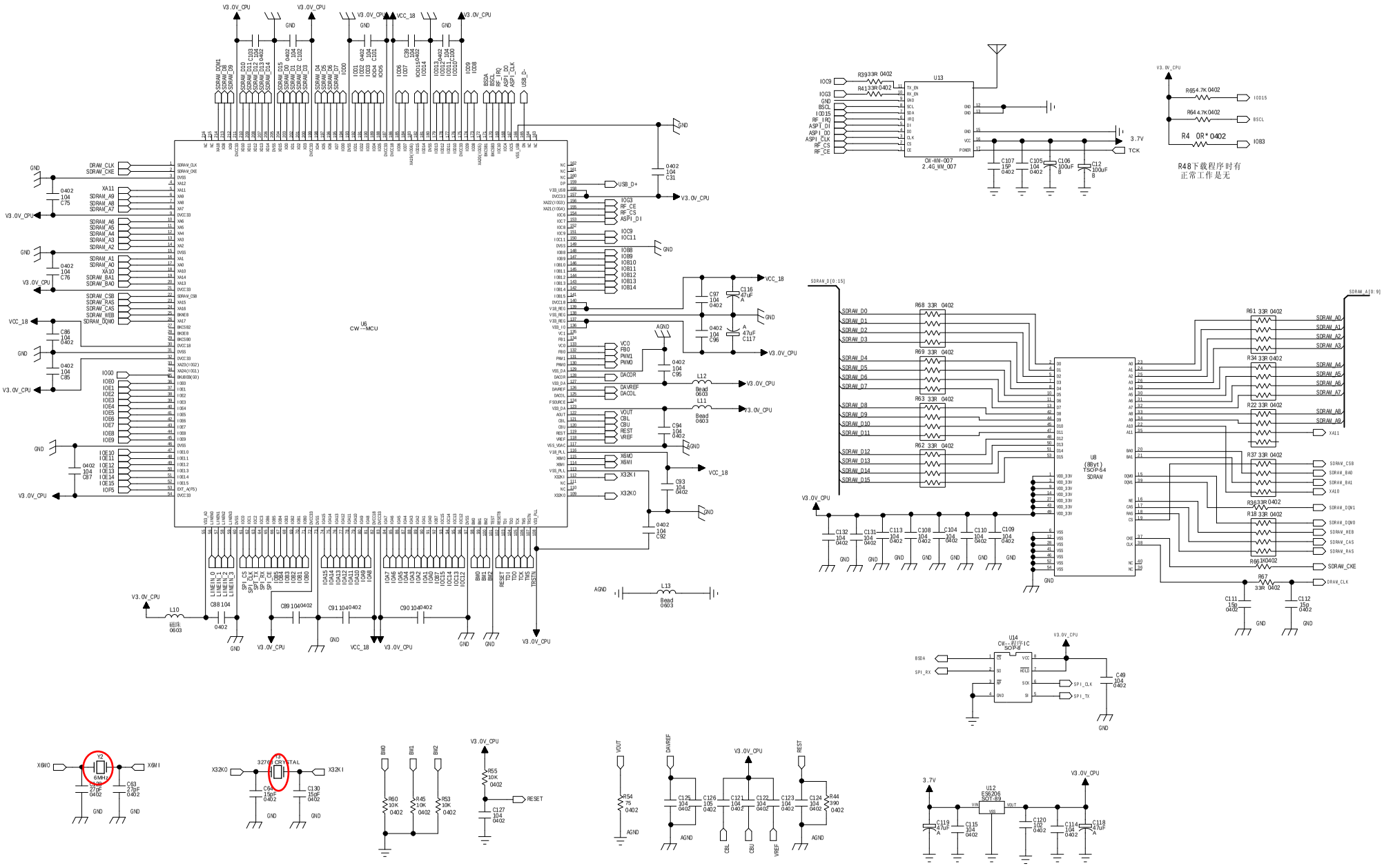

安尔发科技 RF Electronics Technology Co.,Ltd.

RELEASED	TITLE: CW		REV: 1.0
QUALITY CONTROL	Document Number: CW-WVB-366o		SIZE: A2
CHECKED	DRAWN: zwy	DATED: 2010.04.30	SHEET: 1 OF 3

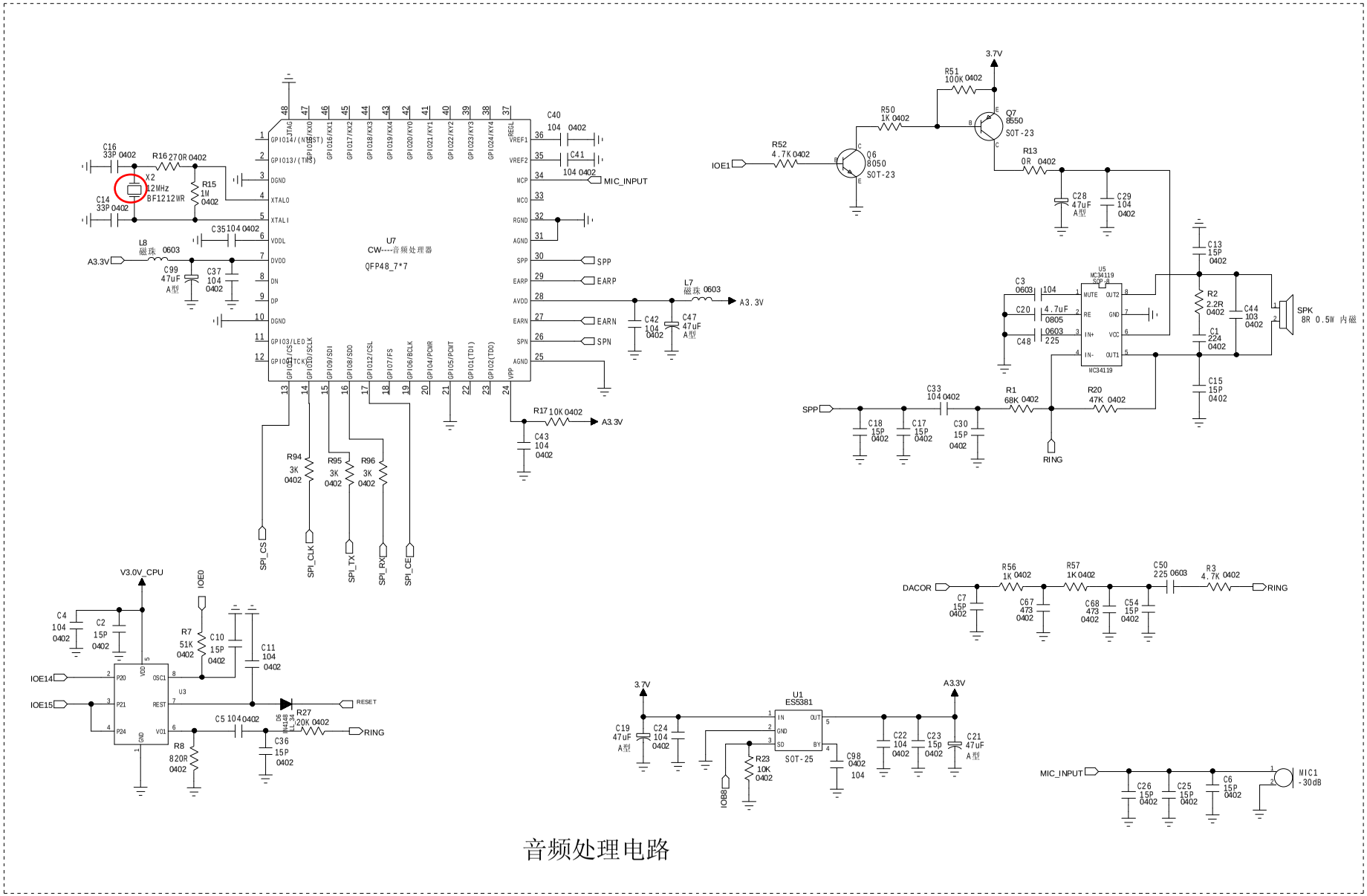

音频处理电路

安尔发科技 RF Electronics Technology Co.,Ltd.			
RELEASED	TITLE: AUDIO		REV: 1.0
QUALITY CONTROL	Document Number: CW-WVB-366o		SIZE: A2
CHECKED	DRAWN: zwy	DATED: 2010.04.30	SHEET: 2 OF 3

PDF created with pdfFactory Pro trial version www.pdffactory.com

PDF created with pdfFactory Pro trial version www.pdffactory.com

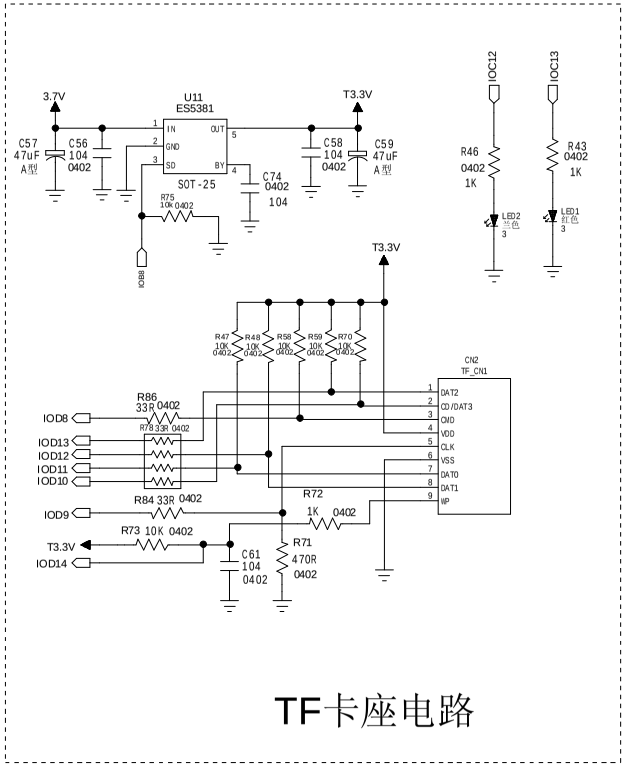

TF卡座电路

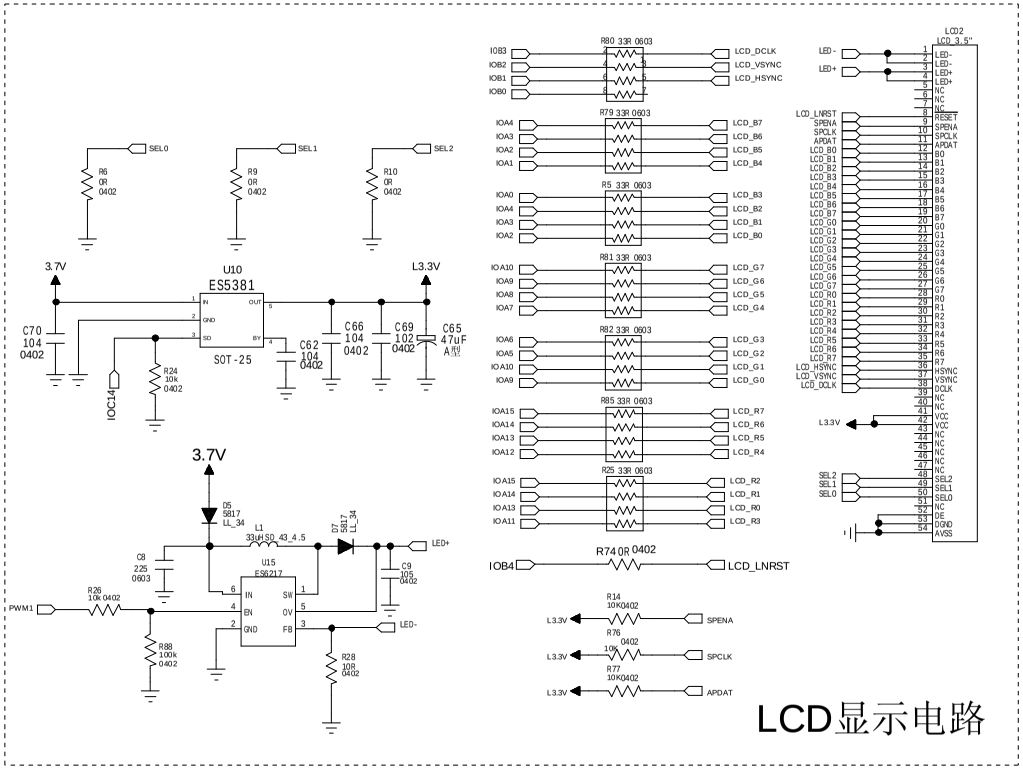

LCD显示电路

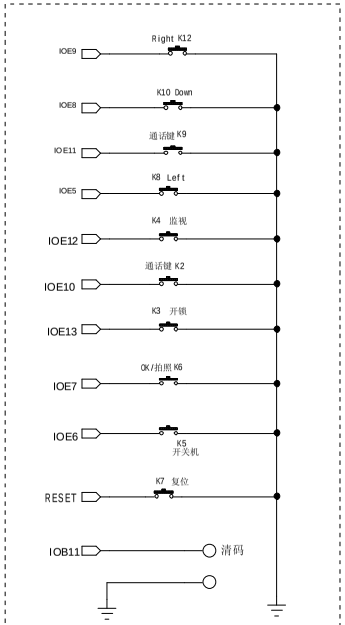

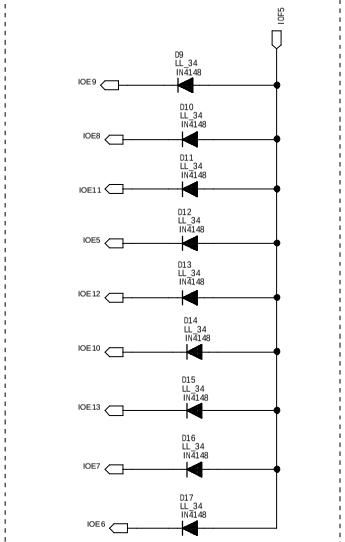

功能按键电路

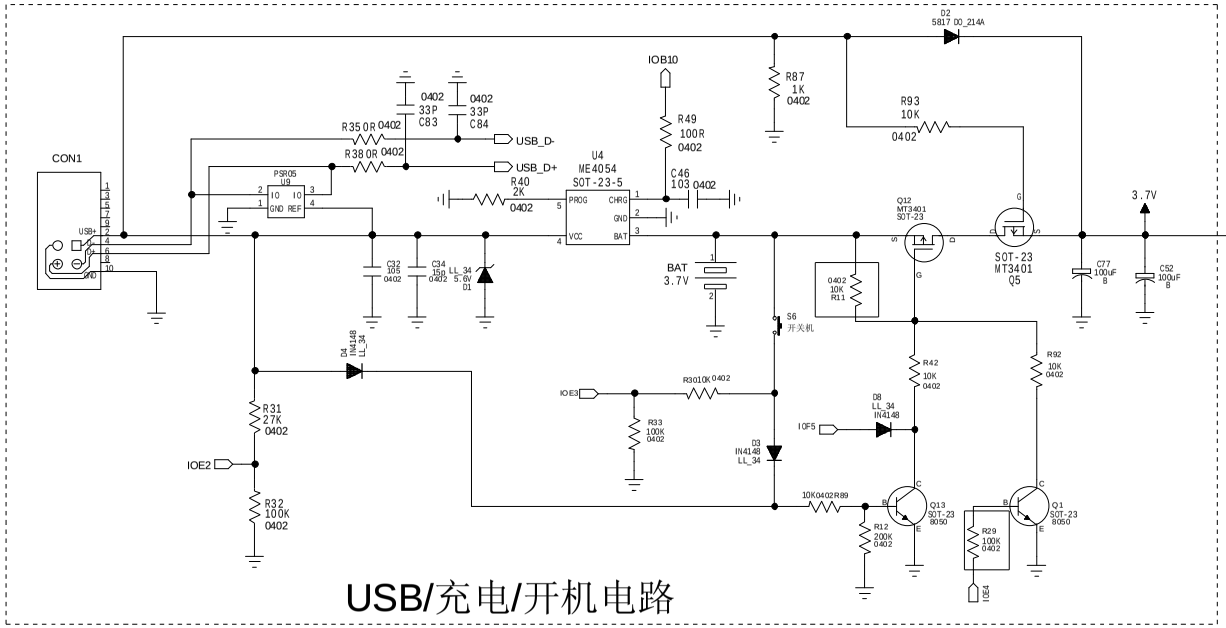

USB/充电/开机电路

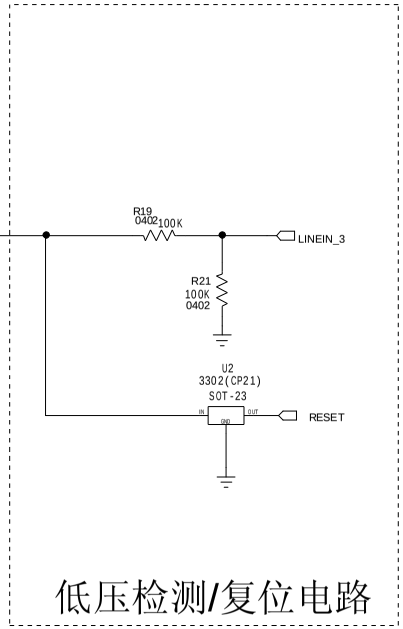

低压检测/复位电路

安尔发科技 RF Electronics Technology Co.,Ltd.			
RELEASED	TITLE: SD_LCD_POWER		REV: 1.0
QUALITY CONTROL	Document Number: CW-WVB-366o		SIZE: A2
CHECKED	DRAWN: zwy	DATED: 2010.04.30	SHEET: 3 OF 3