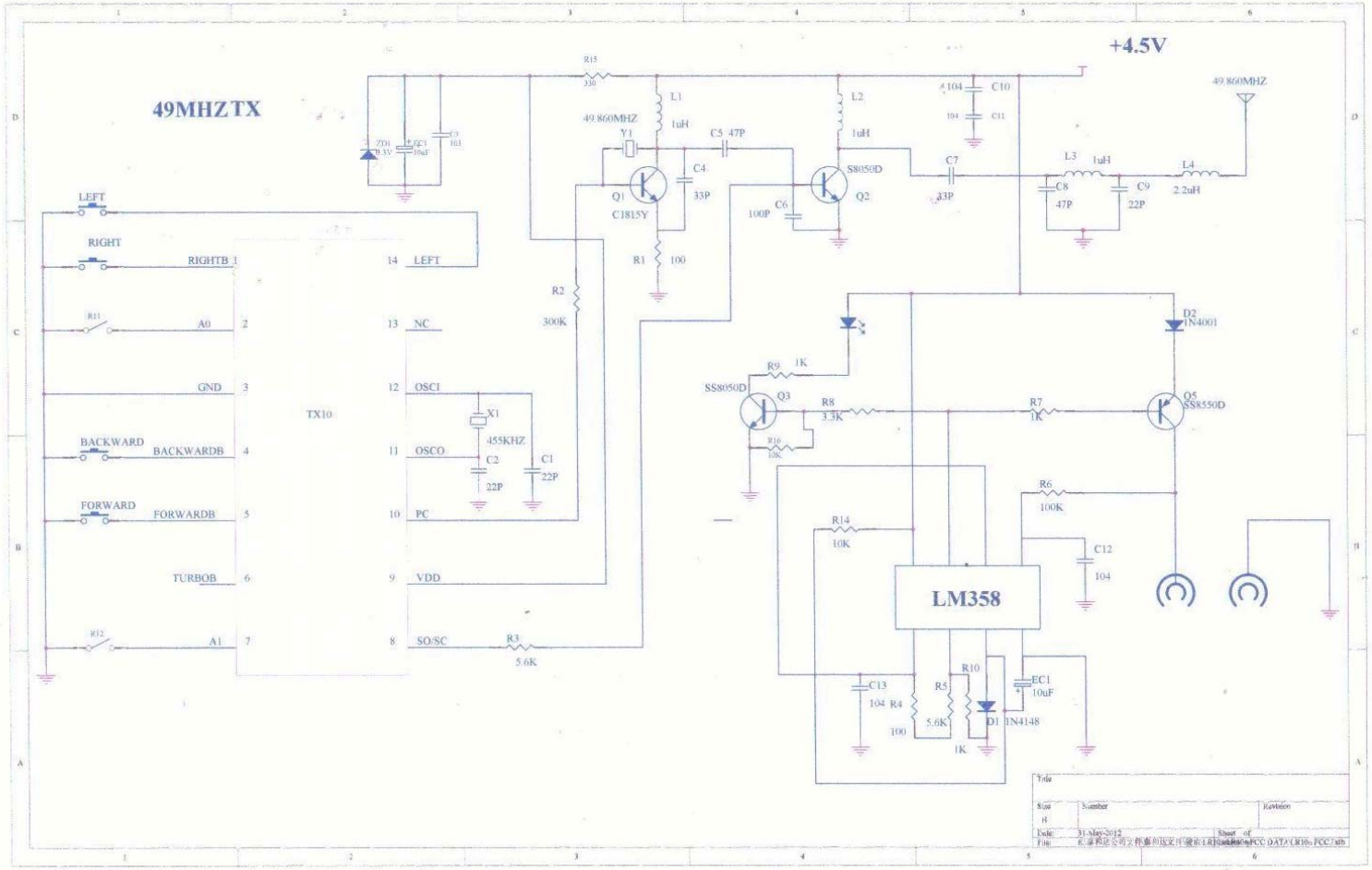
49MHZTX
+4.5V
LEFT
RIGHT
RIGHTB
A0
GND
BACKWARD
BACKWARDB
FORWARD
FORWARDB
TURBOB
A1
TX10
LEFT
NC
OSCI
OSCO
PC
VDD
SO/SC
X1
455KHZ
C2
22P
C1
22P
R3
5.6K
R2
300K
R15
330
ZD1
5.1V
EC1
10uF
C3
103
L1
1uH
49.860MHZ
Y1
C5 47P
C4
33P
Q1
C1815Y
R1
100
L2
1uH
SS8050D
Q2
C6
100P
C7
33P
C10
104
C11
104
L3
1uH
C8
47P
C9
22P
L4
2.2uH
49.860MHZ
D2
1N4001
R9
1K
SS8050D
Q3
R8
3.3K
R16
10K
R7
1K
Q5
SS8550D
R6
100K
R14
10K
C12
104
LM358
C13
104
R4
100
R5
5.6K
R10
1K
D1
1N4148
EC1
10uF
Title
Size
B
Number
Revision
Date: 31-May-2012
File: E:\泰邦证书文件\泰邦证书文件\泰邦证书\LR\Gaoshan\FCC DATA\CR10s FCC.sch
Sheet of