Corporate Name	GOLDIE MARKETING PTY. LTD		
ADDRESS	UNIT 1,51-53 POWER RD., BAYSWATER VIC 3153 MELBOURNE,AUSTARLIA		
Product Name	MINI RC-Mario		
PREPARED BY:	CHEN GUO	APPROVED BY:	**Steven Chow**
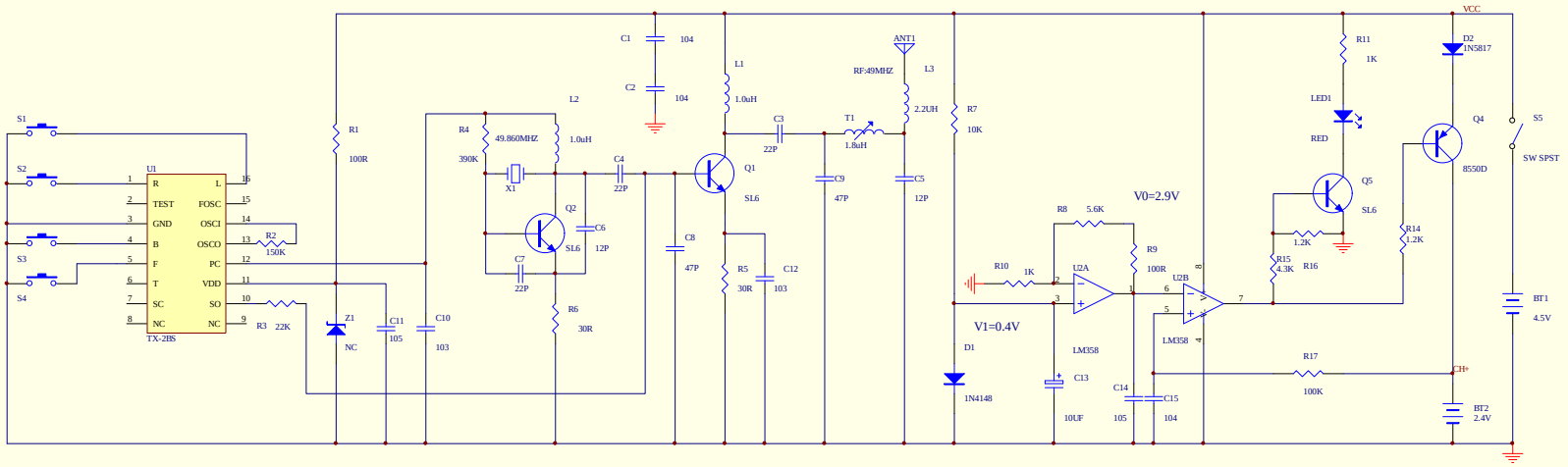
49MHz TX Circuit Diagram