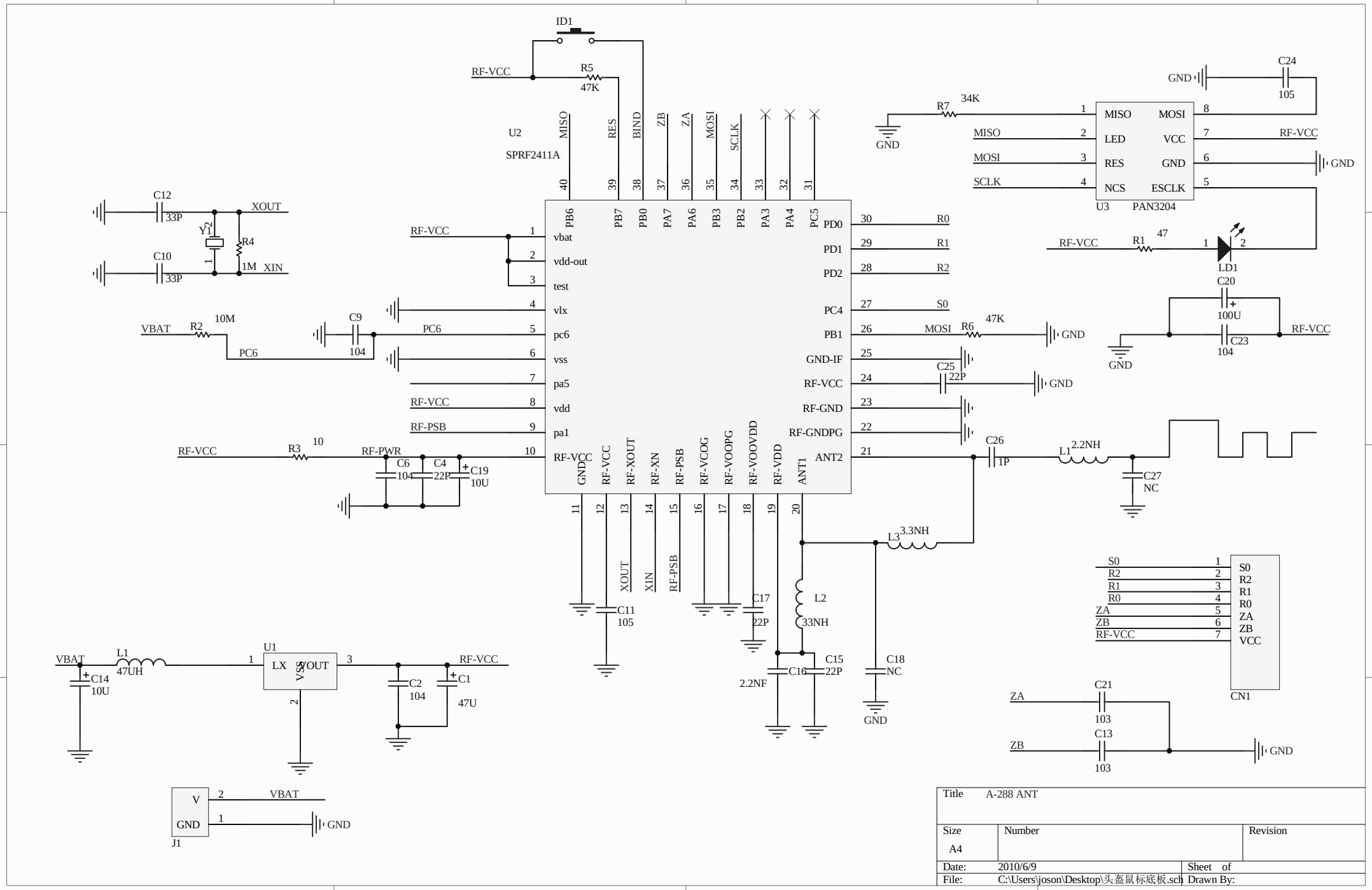

Title	A-288 ANT	
Size A4	Number	Revision
Date: 2010/6/9	Sheet of	
File: C:\Users\joson\Desktop\头盔鼠标底板.sch	Drawn By:	