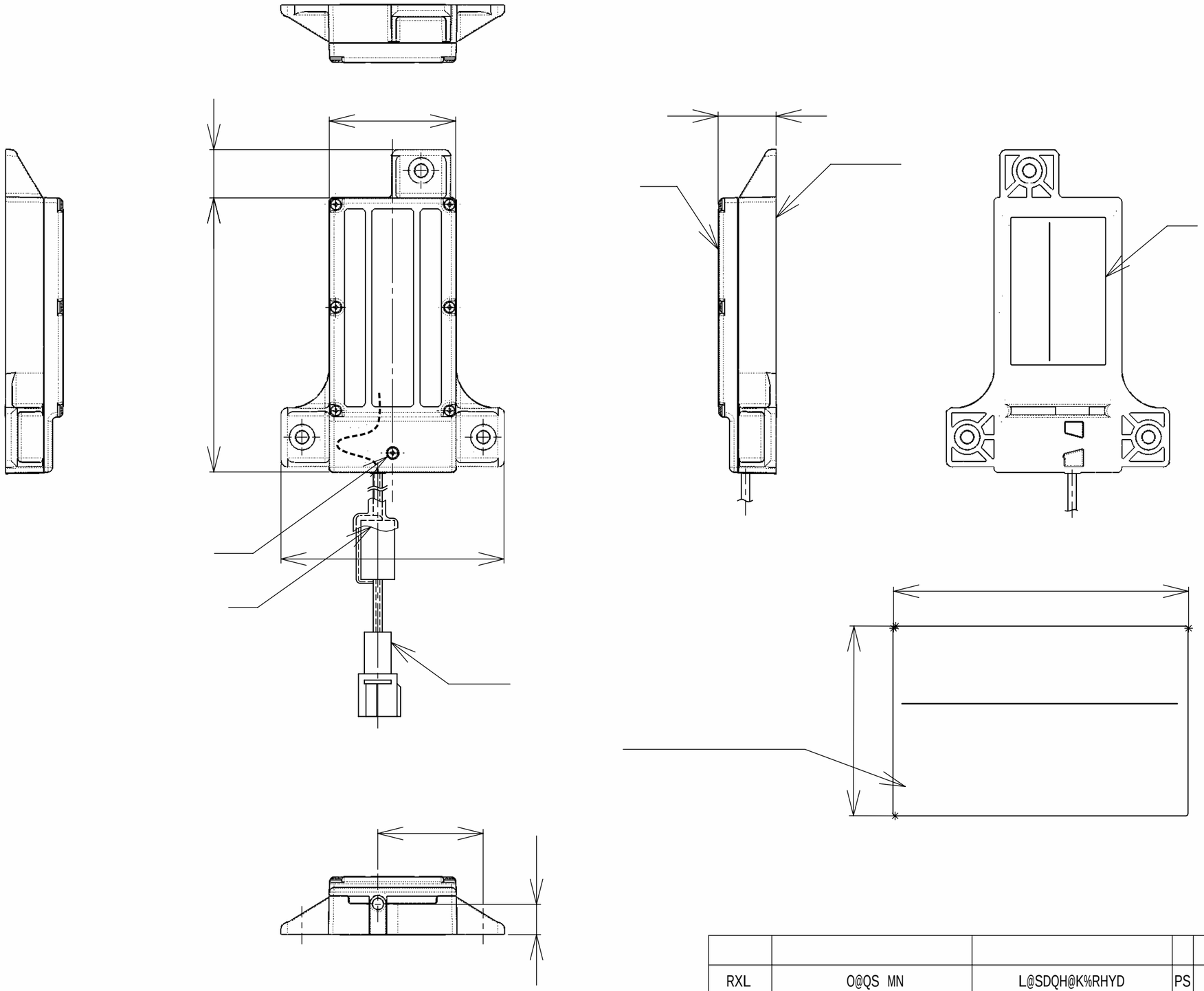

	△				
	△				
	△				
BNLLDQBH@K SNKDQ@MBD	RXL	C@SD	Q D U H R H N M	RHFMDC	BGDBJDC

RXL	O@QS MN		L@SDQH@K%RHYD		PS	EHMHRG		QDL@QJ
	SDQLHM@K TMHS ` IV8,74468,//					O@QS M@LD	@RRDLAKX CQ@VHMF	
091						O@QS MN		
	1/0/- 7- 4	1/0/- 7- 4				QDUHRHNM MN		
RB@KD	CDRHFMDC	CQ@VM	BGDBJDC'0(	BGDBJDC'1(	@OOQNUDC			

'Sghqc `mfkd oqnidbshnm ('IHR @,2(S@SDX@L@ J@F@JT HMC-BN-+KSC-