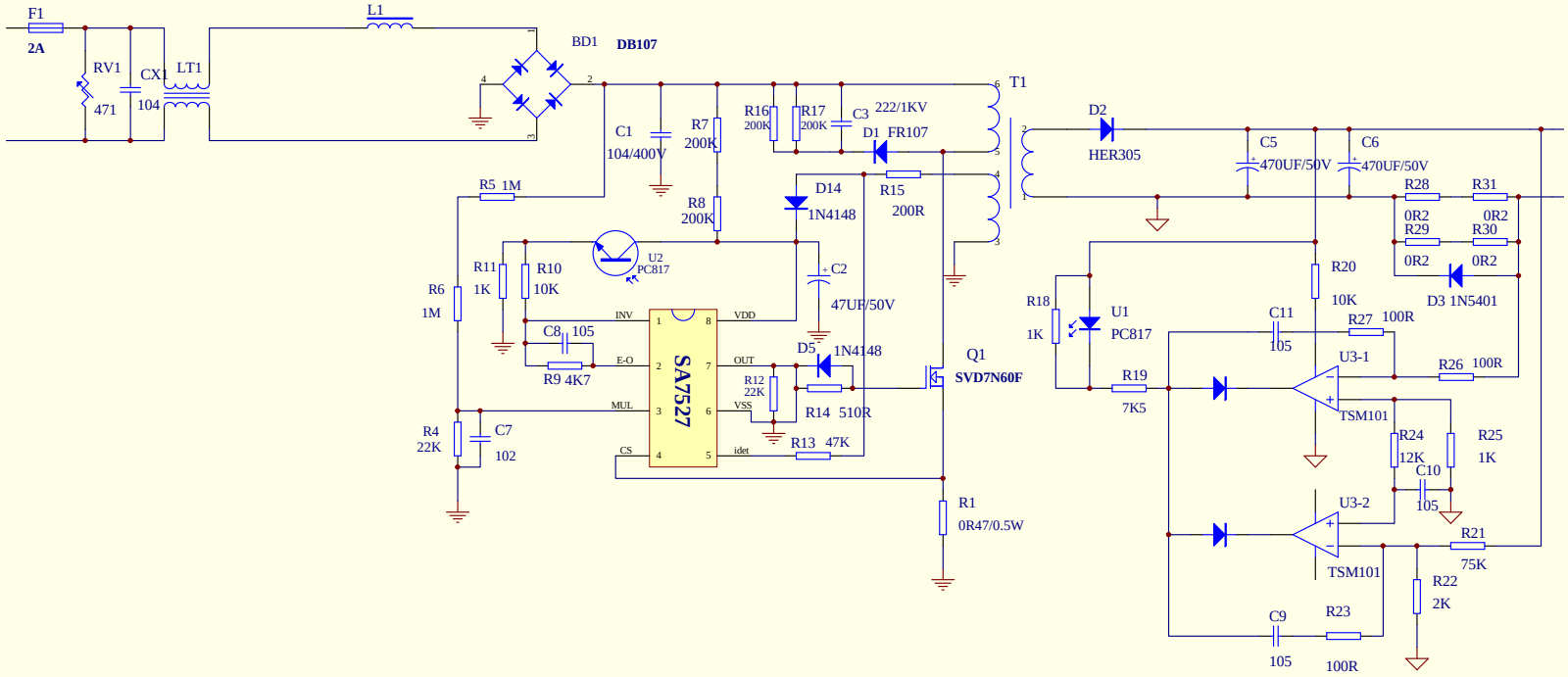

Title		
Size B	Number	Revision
Date: 10-May-2010	Sheet of	
File: D:\SIRONEX_1-1-2010\ANDY-1\7527.ddb	Drawn By:	