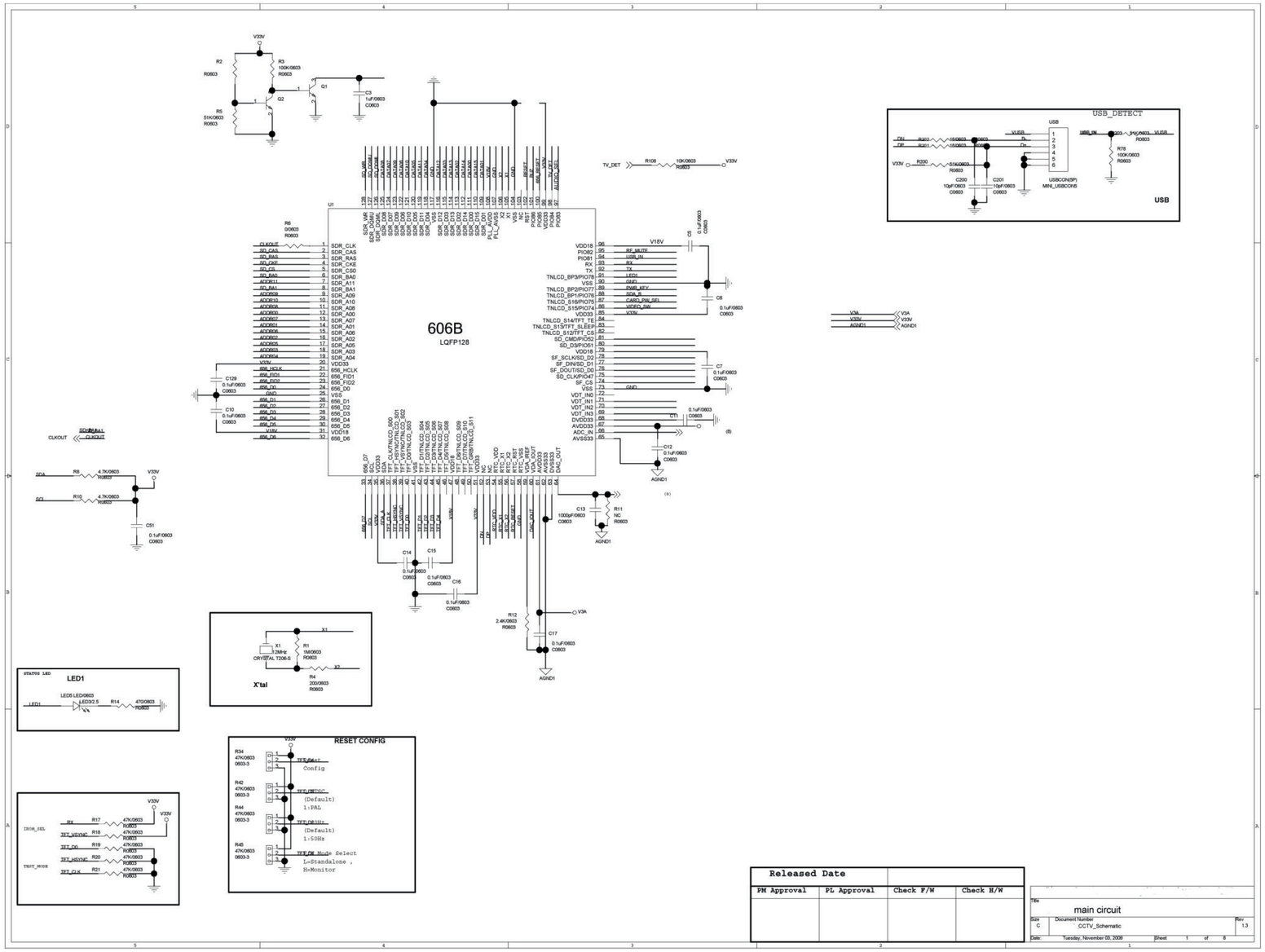

Released Date			
PM Approval	PL Approval	Check F/W	Check H/W

Title: main circuit

Size: C | Document Number: CCTV_Schematic | Rev: 1.3

Date: Tuesday, November 03, 2009 | Sheet 1 of 8

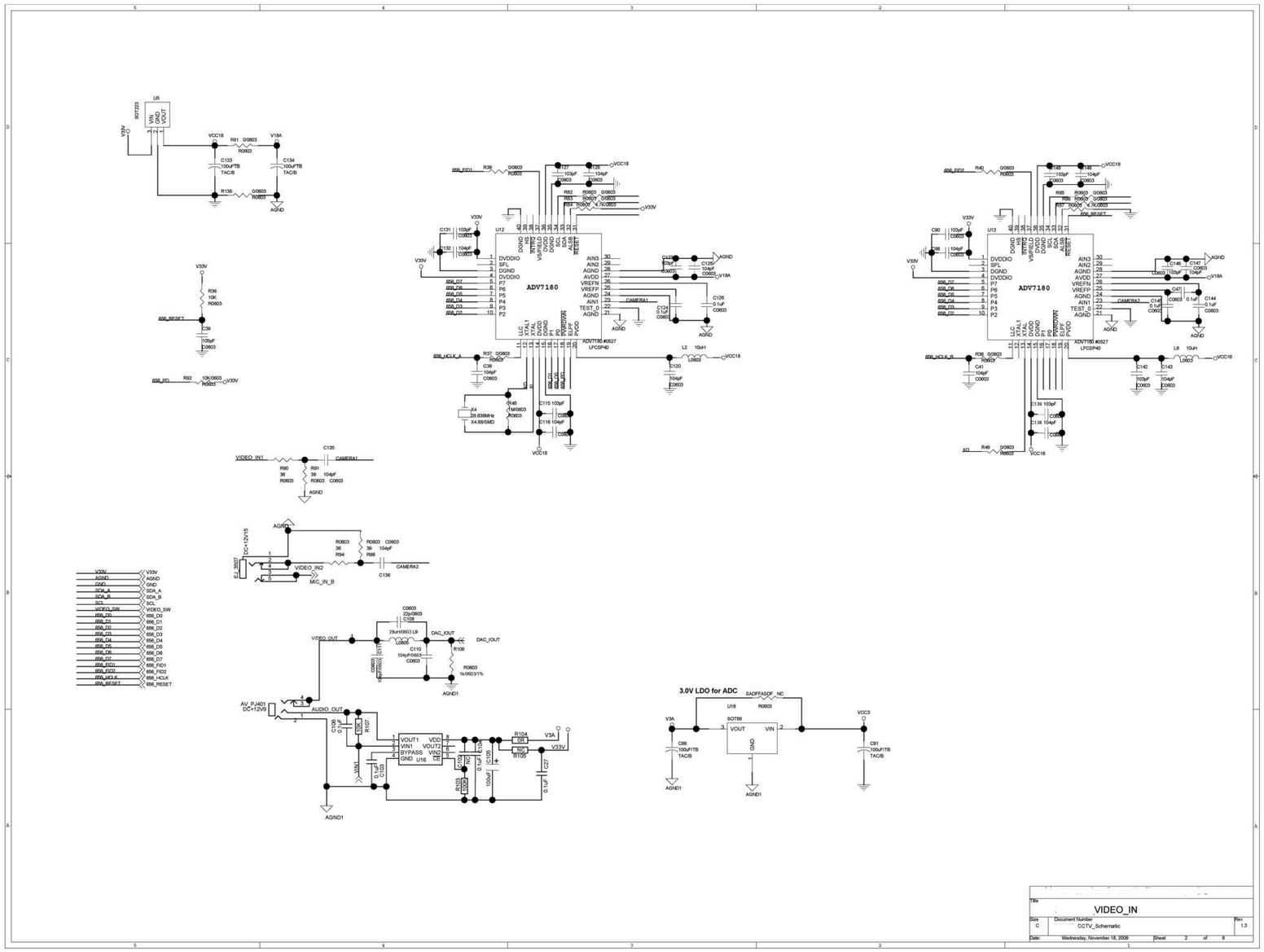
ADV7180
ADV7180
3.0V LDO for ADC
VIDEO_IN
CCTV_Schematic
Wednesday, November 18, 2009
Sheet 2 of 8
Rev 1.3

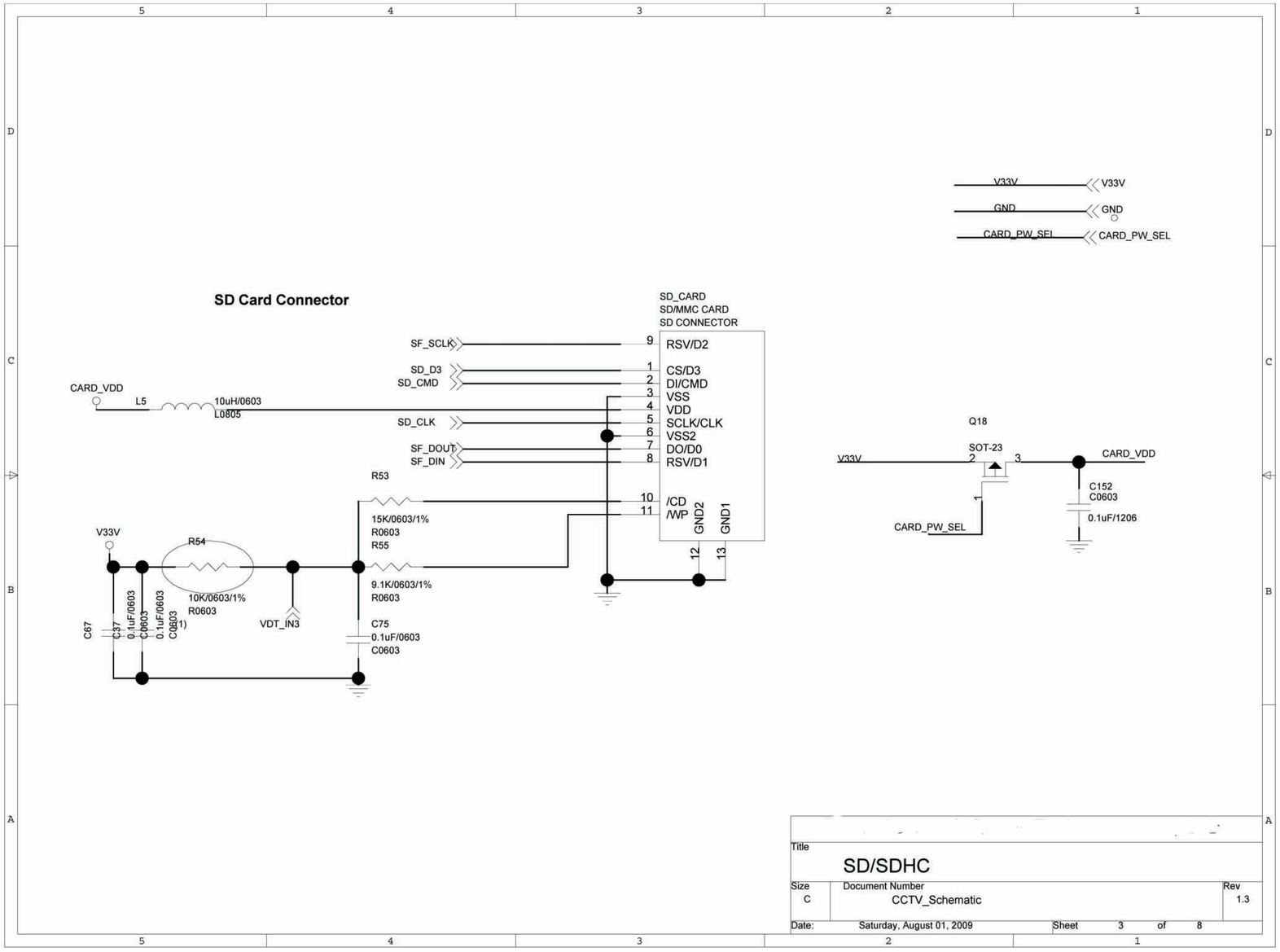
V33V
GND
CARD_PW_SEL
SD Card Connector
SD_CARD
SD/MMC CARD
SD CONNECTOR
SF_SCLK
SD_D3
SD_CMD
CARD_VDD
L5
10uH/0603
L0805
SD_CLK
SF_DOUT
SF_DIN
R53
15K/0603/1%
R0603
R55
9.1K/0603/1%
R0603
V33V
R54
10K/0603/1%
R0603
VDT_IN3
C67
C37
0.1uF/0603
C0603
0.1uF/0603
C0603
C75
0.1uF/0603
C0603
9 RSV/D2
1 CS/D3
2 DI/CMD
3 VSS
4 VDD
5 SCLK/CLK
6 VSS2
7 DO/D0
8 RSV/D1
10 /CD
11 /WP
12 GND2
13 GND1
Q18
SOT-23
V33V
CARD_VDD
C152
C0603
0.1uF/1206
CARD_PW_SEL
Title
SD/SDHC
Size
C
Document Number
CCTV_Schematic
Rev
1.3
Date:
Saturday, August 01, 2009
Sheet
3
of
8

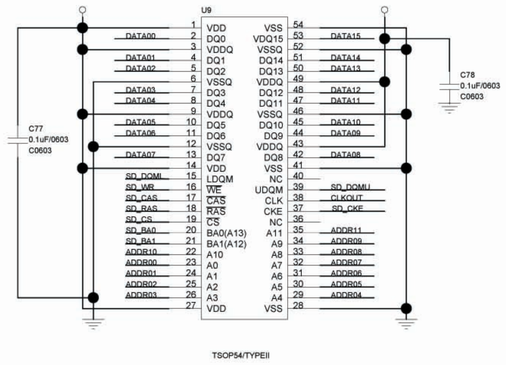

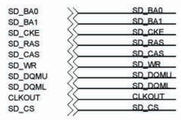

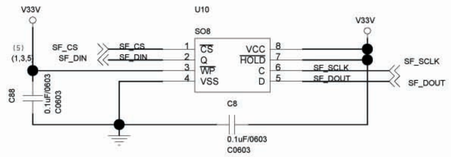

Title
MEMORY&SDRAM

Size	Document Number	Rev
C	CCTV_Schematic	1.3

Date: Saturday, August 01, 2009 Sheet 4 of 8

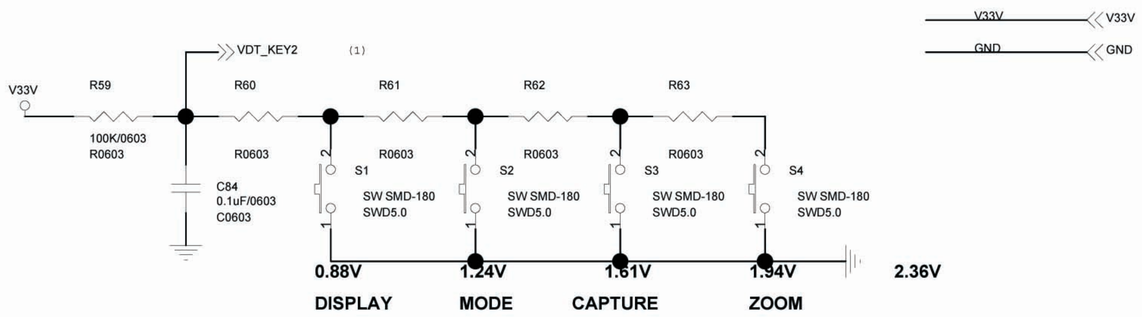

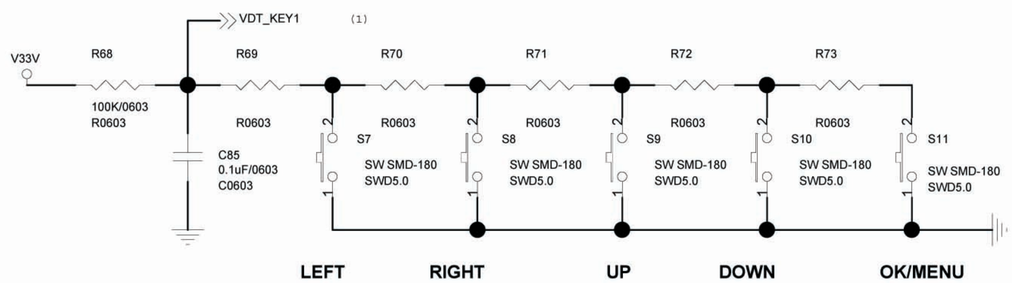

Title	KEY	
Size C	Document Number CCTV_Schematic	Rev 1.3
Date: Saturday, August 01, 2009	Sheet 5 of 8	

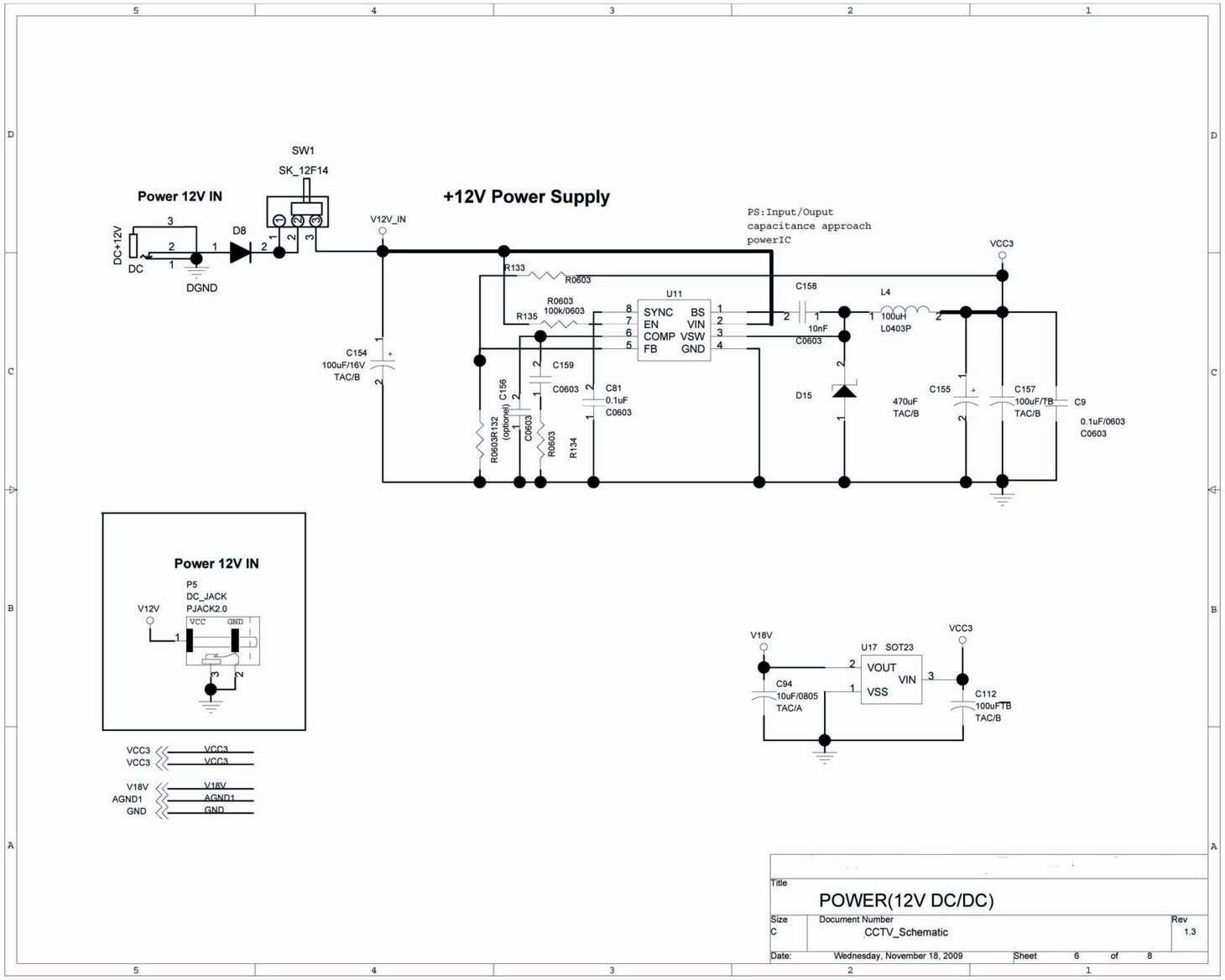

Title	POWER(12V DC/DC)		
Size C	Document Number CCTV_Schematic		Rev 1.3
Date: Wednesday, November 18, 2009		Sheet 6 of 8	

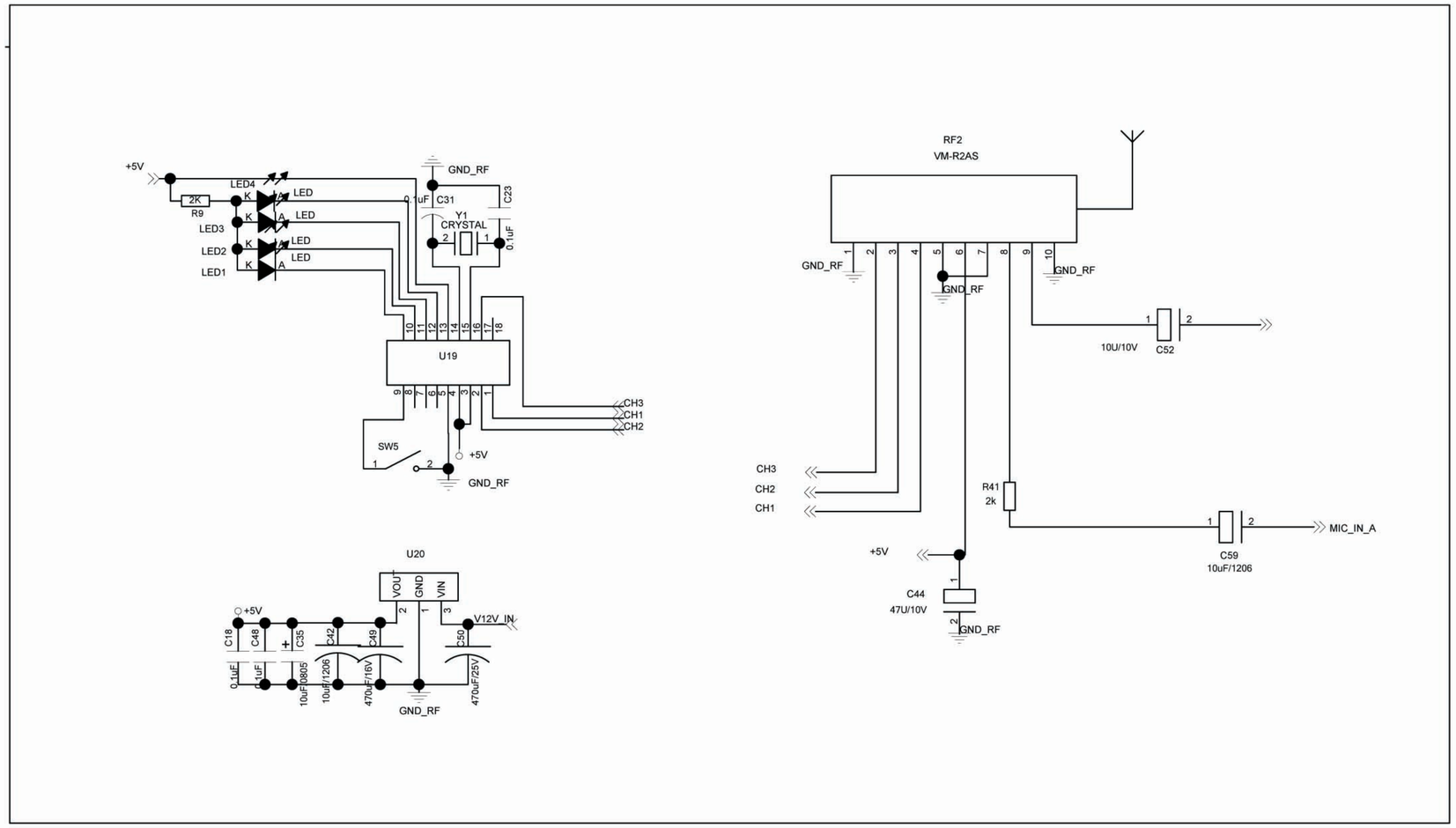
+5V
2K
R9
LED4
LED3
LED2
LED1
K
A
LED
GND_RF
0.1uF
C31
C23
Y1
CRYSTAL
U19
CH3
CH1
CH2
SW5
+5V
GND_RF
U20
VOUT
GND
VIN
V12V_IN
C18
C48
C35
C42
C49
C50
0.1uF
10uF/0805
10uF/1206
470uF/16V
470uF/25V
GND_RF
RF2
VM-R2AS
GND_RF
10U/10V
C52
CH3
CH2
CH1
R41
2k
MIC_IN_A
C59
10uF/1206
+5V
C44
47U/10V
GND_RF