HEIDENHAIN

Mounting Instructions
*Montageanleitung*
Instructions de montage
*Istruzioni di montaggio*
Instrucciones de montaje
取付説明書
安装说明
安裝指導手冊
설치 지침

# TT 460

**7/2013**

**Contents**
***Inhalt***
**Sommaire**
***Indice***
**Índice**


**Page**
**4** Warnings
**8** Approval for radio transmission
**12** Items supplied
**16** Dimensions
**20** Protocol of log
**22** Mounting the probe contact
**24** Mounting
**26** Exchanging the connection pin / probe contact
**30** Battery exchange
**32** Centering
**34** Signal sequence

***Seite***
***4*** *Warnhinweise*
***8*** *Funkerlaubnis*
***12*** *Lieferumfang*
***16*** *Abmessungen*
***20*** *Darstellung des Protokolls*
***22*** *Montage Antastelement*
***24*** *Montage*
***26*** *Verbindungsstift / Antastelement wechseln*
***30*** *Batteriwechsel*
***32*** *Zentrieren*
***34*** *Signalfolge*

**Page**
**4** Avertissement
**8** Approval for radio transmission
**12** Objet de la fourniture
**16** Dimensions
**20** Protocol of log
**22** Montage élément de palpage
**24** Montage
**26** Remplacer la tige d'assemblage / élément de palpage
**30** Battery exchange
**32** Centering
**34** Signal sequence

***Pagina***
***4*** *Avvertenze*
***8*** *Approval for radio transmission*
***12*** *Standard di fornitura*
***16*** *Dimensioni*
***20*** *Protocol of log*
***22*** *Montaggio dell'elemento di tastatura*
***24*** *Montaggio*
***26*** *Sostituzione di spina di collegamento / elemento di tastatura*
***30*** *Battery exchange*
***32*** *Centering*
***34*** *Signal sequence*

**Página**
**4** Notas de aviso
**8** Approval for radio transmission
**12** Elementos suministrados
**16** Dimensiones
**20** Protocol of log
**20** Montaje elemento de palpación
**22** Montaje
**26** cambiar palpador / vástago de unión
**30** Battery exchange
**32** Centering
**34** Signal sequence

**Contents**
目次
目录
目錄
목차

**Page**
**5** Warnings
**10** Approval for radio transmission
**14** Items supplied
**18** Dimensions
**21** Protocol of log
**23** Mounting the probe contact
**25** Mounting
**28** Exchanging the connection pin / probe contact
**31** Battery exchange
**33** Centering
**35** Signal sequence

ページ
5 注意事項
10 Approval for radio transmission
14 梱包品
18 寸法
21 Protocol of log
23 Mounting the probe contact
25 Mounting
28 Exchanging the connection pin / probe contact
**31** Battery exchange
**33** Centering
**35** Signal sequence

页
5 提示
10 Approval for radio transmission
14 零部件
18 尺寸
21 Protocol of log
23 Mounting the probe contact
25 Mounting
28 Exchanging the connection pin / probe contact
**31** Battery exchange
**33** Centering
**35** Signal sequence

頁碼
5 警告
10 Approval for radio transmission
14 供應的項目
18 尺寸
21 Protocol of log
23 Mounting the probe contact
25 Mounting
28 Exchanging the connection pin / probe contact
**31** Battery exchange
**33** Centering
**35** Signal sequence

페이지
5 경고
10 Approval for radio transmission
14 제공 품목
18 규격
21 Protocol of log
23 Mounting the probe contact
25 Mounting
28 Exchanging the connection pin / probe contact
**31** Battery exchange
**33** Centering
**35** Signal sequence

**Warnings**
***Warnhinweise***
**Avertissement**
***Avvertenze***
**Notas de aviso**

**Note:** Mounting and commissioning is to be conducted by a qualified specialist under compliance with local safety regulations.
***Achtung:*** *Die Montage und Inbetriebnahme ist von einer qualifizierten Fachkraft unter Beachtung der örtlichen Sicherheitsvorschriften vorzunehmen.*
**Attention:** le montage et la mise en service doivent être assurés par un personnel qualifié dans le respect des consignes de sécurité locales.
***Attenzione:*** *Il montaggio e la messa in funzione devono essere eseguite da personale qualifucato nel rispetto delle norme di sicurezza locali.*
**Atención:** El montaje y la puesta en marcha deben ser realizados por un especialista cualificado, observando las prescripciones locales de seguridad.

Calibrate the touch probe with the calibration cycle of the control before commissioning.
*Tastsystem vor Inbetriebnahme mit Kalibrierzyklus der Steuerung kalibrieren.*
Avant la mise en service, étalonner le palpeur avec le cycle d'étalonnage de la commande.
*Calibrare il tastatore prima della messa in funzione con il ciclo di calibrazione del controllo numerico.*
Calibrar el palpador, antes de la puesta en marcha, con el ciclo de calibración del control.

**Warnings**
注意事項
提示
警告
경고

**Note:** Mounting and commissioning is to be conducted by a qualified specialist under compliance with local safety regulations.
注意：取付け及び試運転は設置国の安全規格のもとで有資格の専門家により実施するようにしてください。
注意： 安装和调试时必须符合当地安全要求并由具有资质的专业人员操作
注意:安裝與調整要經由已認證的專業人員指導以符合當地安全規範要求。
주의: 설치 및 조정은 한국의 안전도 규정에 의하여 작업을 수행할 수 있는 공인된 기술자에 의해 수행되어야 합니다.

Calibrate the touch probe with the calibration cycle of the control before commissioning.
Calibrate the touch probe with the calibration cycle of the control before commissioning.
Calibrate the touch probe with the calibration cycle of the control before commissioning.
Calibrate the touch probe with the calibration cycle of the control before commissioning.
Calibrate the touch probe with the calibration cycle of the control before commissioning.

Do not drop the touch probe.
*Tastsystem nicht fallen lassen.*
Ne pas laisser tomber le palpeur.
*Non far cadere il tastatore.*
No dejar caer el palpador.

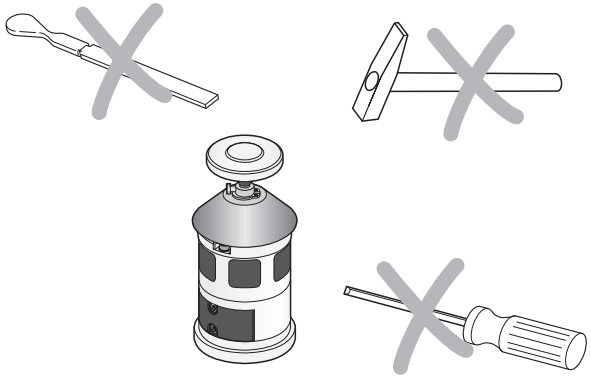

Do not drop the touch probe.
タッチプローブを落とさないでください.
请不要使测头跌落.
探針請勿掉落.
터치 프루브를 떨어뜨리면 않됩니다.

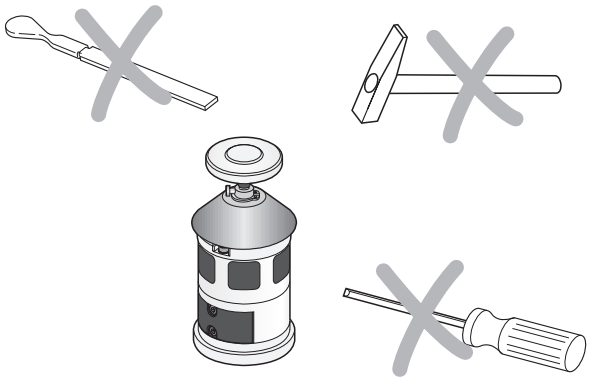

| | |
|---|---|
| **Approval for radio transmission** | For operation in radio mode |
| ***Funkerlaubnis*** | *Für den Betrieb im Funkmodus* |
| **Funkerlaubnis** | Für den Betrieb im Funkmodus |
| ***Funkerlaubnis*** | *Für den Betrieb im Funkmodus* |
| **Funkerlaubnis** | Für den Betrieb im Funkmodus |

**USA** FCC ID YJKTSX6TTX6

**FCC User information (USA only)**

**acc. Section 15.19**
This device complies with Part 15 of the FCC Rules. Operation is subject to the following two conditions:
(1) this device may not cause harmful interference, and
(2) this device must accept any interference received, including interference that may cause undesired operation.

**acc. Section 15.21**
Changes or modifications not expressly approved by the party responsible for compliance could void the user's authority to operate the equipment.

**acc. Section 15.105**
NOTE: This equipment has been tested and found to comply with the limits for a Class B digital device, pursuant to part 15 of the FCC Rules. These limits are designed to provide reasonable protection against harmful interference in a residential installation. This equipment generates, uses and can radiate radio frequency energy and, if not installed and used in accordance with the instructions, may cause harmful interference to radio communications. However, there is no guarantee that interference will not occur in a particular installation. If this equipment does cause harmful interference to radio or television reception, which can be determined by turning the equipment off and on, the user is encouraged to try to correct the interference by one or more of the following measures:

- Reorient or relocate the receiving antenna.
- Increase the separation between the equipment and receiver.
- Connect the equipment into an outlet on a circuit different from that to which the receiver is connected.
- Consult the dealer or an experienced radio/TV technician for help.

**Europe** CE

DR. JOHANNES HEIDENHAIN GmbH hereby declares that the TT460 touch probe system is in compliance with the essential requirements and other relevant provisions of Directive 1999/5/EC.
The EC Declaration of Conformity can be requested from

DR. JOHANNES HEIDENHAIN GmbH
Dr.-Johannes-Heidenhain-Straße 5
83301 Traunreut, Germany

or www.heidenhain.de

*Die DR. JOHANNES HEIDENHAIN GmbH erklärt hiermit, dass sich das Tastsystem TT460 in Übereinstimmung mit den grundlegenden Anforderungen und den übrigen einschlägigen Bestimmungen der Richtlinie 1999/5/EG befindet.*
*Die Konformitätserklärung kann unter folgender Adresse angefordert werden:*

*DR. JOHANNES HEIDENHAIN GmbH*
*Dr.-Johannes-Heidenhain-Straße 5*
*83301 Traunreut, Germany*

*oder www.heidenhain.de*

**Canada** IC: 11148A-TSX6TTX6

**RSS Gen Issue 3 Sect. 7.1.3**
This device complies with Industry Canada licence-exempt RSS standard(s). Operation is subject to the following two conditions:
(1) this device may not cause interference, and
(2) this device must accept any interference, including interference that may cause undesired operation of the device.

Le présent appareil est conforme aux CNR d'Industrie Canada applicables aux appareils radio exempts de licence. L'exploitation est autorisée aux deux conditions suivantes :
(1) l'appareil ne doit pas produire de brouillage, et
(2) l'utilisateur de l'appareil doit accepter tout brouillage radioélectrique subi, même si le brouillage est susceptible d'en compromettre le fonctionnement.

| | |
|---|---|
| **Approval for radio transmission** | For operation in radio mode |
| **Approval for radio transmission** | For operation in radio mode |
| **Approval for radio transmission** | For operation in radio mode |
| **Approval for radio transmission** | For operation in radio mode |
| **Approval for radio transmission** | For operation in radio mode |

| | |
|---|---|
| **Japan** | TBD |
| **China** | TBD |
| **Taiwan** | TBD |
| **Korea** | TBD |

**Specifications of the following pages are preliminary**

**Items supplied**
***Lieferumfang***
**Objet de la fourniture**
***Standard di fornitura***
**Elementos suministrados**

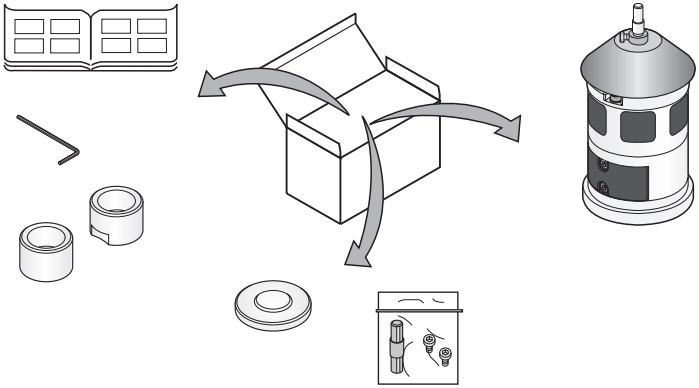

Additional connection pin (rated break point ID 559758-01)
*zusätzlicher Verbindungsstift (mit Sollbruchstelle ID 559758-01)*
tige de liaison supplémentaire (avec point de rupture ID 559758-01)
*spine di collegamento aggiuntive ( con punta di rottura nominale ID 559758-01)*
vástago de unión adicional (con fusible mecánico ID 559758-01)

To be ordered separately:
*Separat bestellen:*
Commander séparément:
*Da ordinare separatamente:*
Pedir por separado:

ID 370827-01

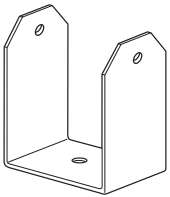

Holder for SE 64x
*Halter für SE 64x*
Support de SE 64x
*Supporto per SE 64x*
Soporte para SE 64x

ID 744677-01

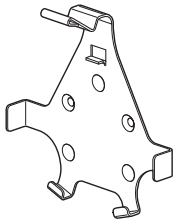

Holder for SE 660
*Halter für SE 660*
Support de SE 660
*Supporto per SE 660*
Soporte para SE 660

**SE 660**
ID 744719-01

**SE 642**
ID 652792-xx

ID 574752-01

Probe contact
*Antastelement*
Elément de palpage
*Elemento di tastatura*
Elemento de palpación

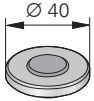


ID 527801-01

ID 676497-01

For lathe tool
*für Drehwerkzeug*
pour outil de tour
*Per utensile per tornire*
para cuchilla de torno

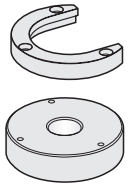

ID 651586-01

Mounting base
*Montagesockel*
Socle de montage
*Base di montaggio*
Zócalo de montaje

ID 827590-01

Spare parts kit for connection pin
*Ersatzteilkit Stift*
Kit de rechange tige
*Kit di sostituzione spine*
Kit de recambio del vástago

**Items supplied**
**梱包品**
**零部件**
**供應的項目**
**제공 품목**

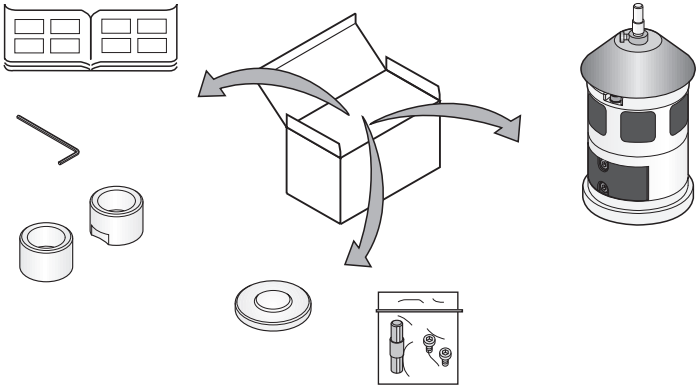

Additional connection pin (rated break point ID 559758-01)
Additional connection pin (rated break point ID 559758-01)
Additional connection pin (rated break point ID 559758-01)
Additional connection pin (rated break point ID 559758-01)
Additional connection pin (rated break point ID 559758-01)

To be ordered separately:
别壳品:
需单独订购:
須另外訂購的項目:
별도로 주문하려면:

ID 370827-01

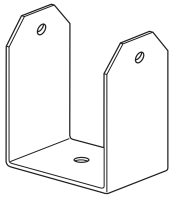

Holder for SE 64x
SE 64x用ホルダー
SE 64x支架
SE 64x 安裝支架
SE 64x용 홀더

ID 744677-01

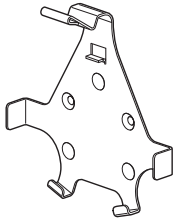

Holder for SE 660
SE 660用ホルダー
SE 660支架
SE 660 安裝支架
SE 660용 홀더

**SE 660**
ID 744719-01

**SE 642**
ID 652792-xx

ID 574752-01

Probe contact
Probe contact
Probe contact
Probe contact
Probe contact

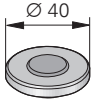


ID 527801-01

ID 676497-01

For lathe tool
For lathe tool
For lathe tool
For lathe tool
For lathe tool

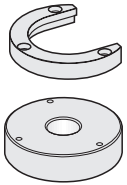

ID 651586-01

Mounting base
Mounting base
Mounting base
Mounting base
Mounting base

ID 827590-01

Spare parts kit for connection pin
Spare parts kit for connection pin
Spare parts kit for connection pin
Spare parts kit for connection pin
Spare parts kit for connection pin

**Dimensions**
***Abmessungen***
**Dimensions**
***Dimensioni***
**Dimensiones**

mm

Tolerancing ISO 8015
ISO 2768 - m H
< 6 mm: ±0.2 mm

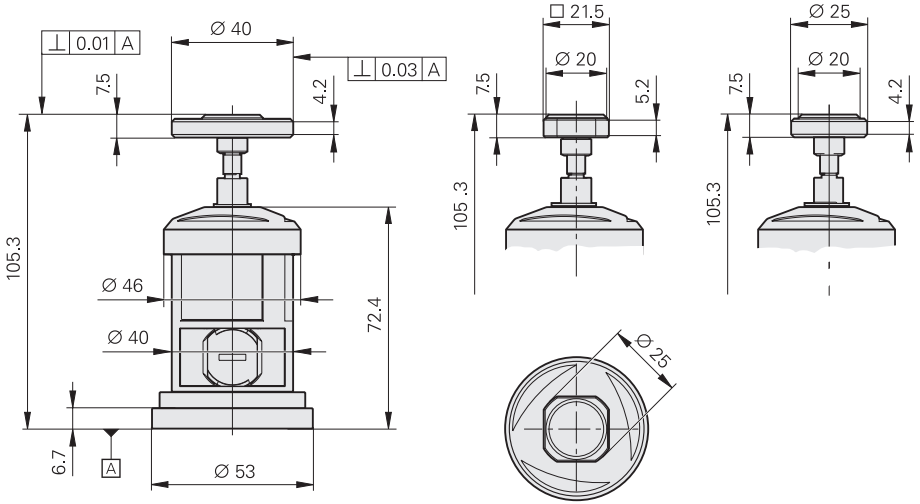


Mounting with fixing clamps
*Befestigung mit Spannpratzen*
Fixation avec griffes de serrage
*Fissaggio con graffette*
Fijación con garras excéntricas

mm

Tolerancing ISO 8015
ISO 2768 - m H
< 6 mm: ±0.2 mm

# TBD

Fastening on mounting base (accessory)
*Befestigung auf Montagesockel (Zubehör)*
Fixation avec socle de montage (accessoire)
*Fissaggio della dima di montaggio (accessorio)*
Fijación sobre zócalo de montaje (accesorio)

**Dimensions**
寸法
尺寸
尺寸
규격

mm

Tolerancing ISO 8015
ISO 2768 - m H
< 6 mm: ±0.2 mm

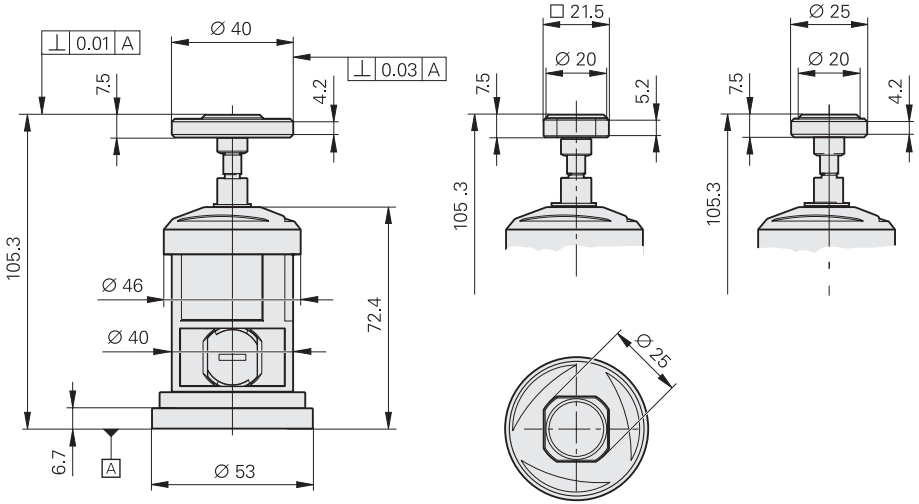


Mounting with fixing clamps
Mounting with fixing clamps
Mounting with fixing clamps
Mounting with fixing clamps
Mounting with fixing clamps

mm

Tolerancing ISO 8015
ISO 2768 - m H
< 6 mm: ±0.2 mm

# TBD

Fastening on mounting base (accessory)
Fastening on mounting base (accessory)
Fastening on mounting base (accessory)
Fastening on mounting base (accessory)
Fastening on mounting base (accessory)

**Protocol of log**
***Darstellung des Protokolls***
**Darstellung des Protokolls**
***Darstellung des Protokolls***
**Darstellung des Protokolls**

| | | | |
|---|---|---|---|
| Switch position<br>Switch position<br>Switch position<br>Switch position<br>Switch position | Activation<br>Activation<br>Activation<br>Activation<br>Activation | Transmission<br>Transmission<br>Transmission<br>Transmission<br>Transmission | Transmission unit<br>Transmission unit<br>Transmission unit<br>Transmission unit<br>Transmission unit |
| 1 | IR[1)] | IR | SE642[3)], SE 660[4)] |
| 2 | RF[2)] | IR, RF | SE 660[4)] |

1) Infrared
Infrared
Infrared
Infrared
Infrared

2) Radio
Radio
Radio
Radio
Radio

4) For transmission unit settings, please refer to the SE 660 operating instructions. SE 642: as of ID 652792-01
For transmission unit settings, please refer to the SE 660 operating instructions. SE 642: as of ID 652792-01
For transmission unit settings, please refer to the SE 660 operating instructions. SE 642: as of ID 652792-01
For transmission unit settings, please refer to the SE 660 operating instructions. SE 642: as of ID 652792-01
For transmission unit settings, please refer to the SE 660 operating instructions. SE 642: as of ID 652792-01

**Protocol of log**
**Protocol of log**
**Protocol of log**
**Protocol of log**
**Protocol of log**

| Switch position<br>Switch position<br>Switch position<br>Switch position<br>Switch position | Activation<br>Activation<br>Activation<br>Activation<br>Activation | Transmission<br>Transmission<br>Transmission<br>Transmission<br>Transmission | Transmission unit<br>Transmission unit<br>Transmission unit<br>Transmission unit<br>Transmission unit |
|---|---|---|---|
| 1 | IR[1)] | IR | SE642[3)], SE 660[4)] |
| 2 | RF[2)] | IR, RF | SE 660[4)] |

1) Infrared
Infrared
Infrared
Infrared
Infrared

2) Radio
Radio
Radio
Radio
Radio

4) For transmission unit settings, please refer to the SE 660 operating instructions. SE 642: as of ID 652792-01
For transmission unit settings, please refer to the SE 660 operating instructions. SE 642: as of ID 652792-01
For transmission unit settings, please refer to the SE 660 operating instructions. SE 642: as of ID 652792-01
For transmission unit settings, please refer to the SE 660 operating instructions. SE 642: as of ID 652792-01
For transmission unit settings, please refer to the SE 660 operating instructions. SE 642: as of ID 652792-01

**Mounting the probe contact**
***Montage Antastelement***
**Montage élément de palpage**
***Montaggio dell'elemento di tastatura***
**Montaje elemento de palpación**

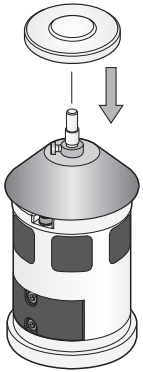

**Caution:** Too much force can destroy the connection pin
***Achtung:*** *Krafteinwirkung kann Verbindungsstift zerstören*
**Attention:** La force exercée peut détruire la tige de liaison
***Attenzione:*** *una forza eccessiva potrebbero rompere le spine di collegamento*
**Atención:** La aplicación de fuerza puede dañar el vástago de unión

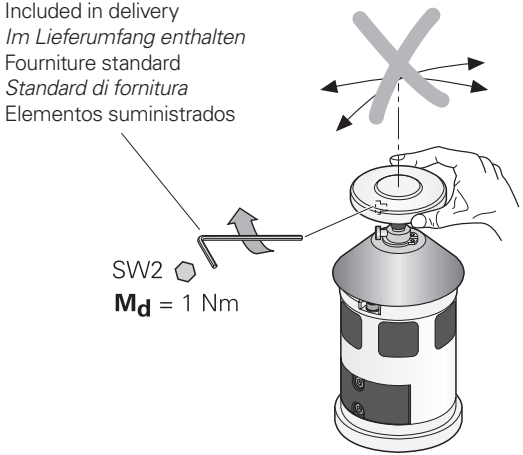

**Mounting the probe contact**
Mounting the probe contact
Mounting the probe contact
Mounting the probe contact
Mounting the probe contact

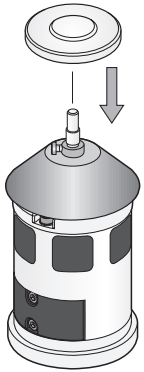

**Caution:** Too much force can destroy the connection pin
Caution: Too much force can destroy the connection pin
Caution: Too much force can destroy the connection pin
Caution: Too much force can destroy the connection pin
Caution: Too much force can destroy the connection pin

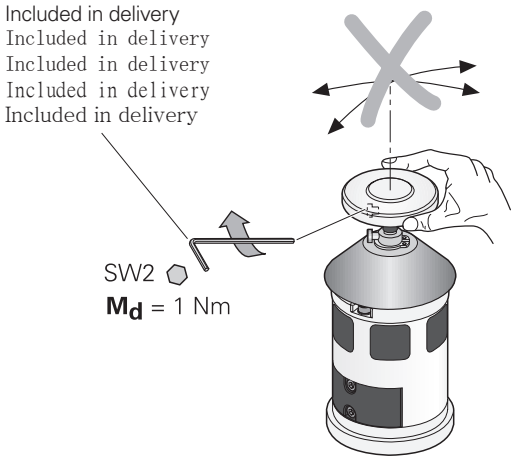

**Assembly**
***Montage***
**Montage**
***Montaggio***
**Montaje**

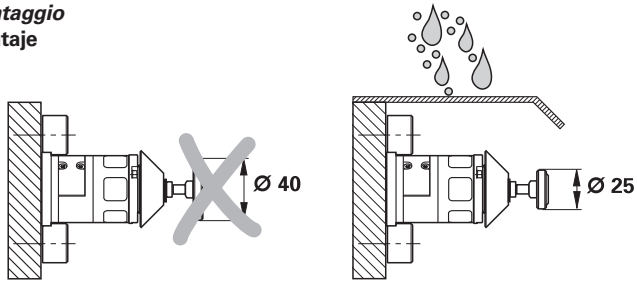


2x
M12 ISO 4762
$\mathbf{M_d}$ = 75 Nm

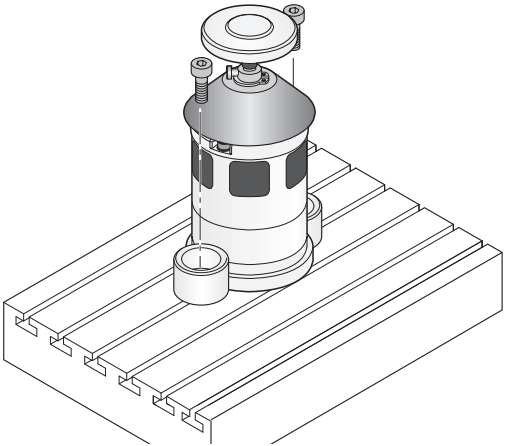

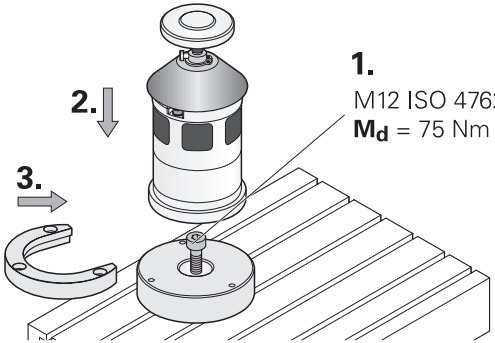


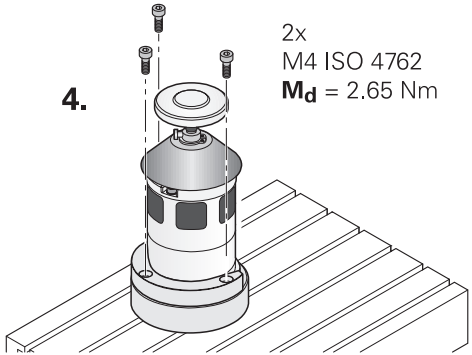

**Mounting**
取付け
安装
安裝
마운팅

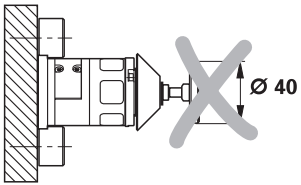


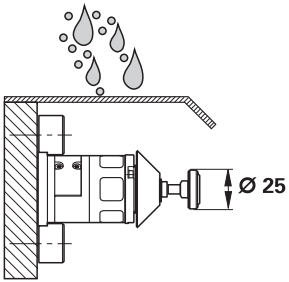


2x
M12 ISO 4762
**$M_d$** = 75 Nm

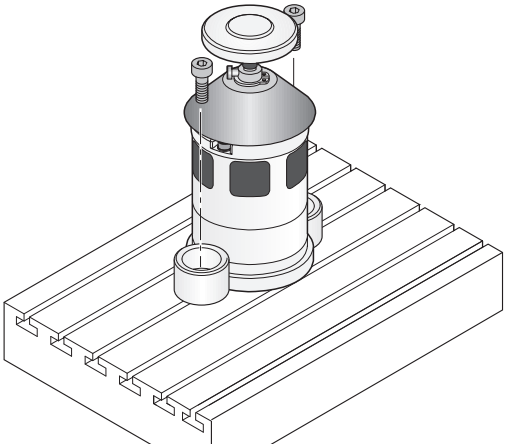

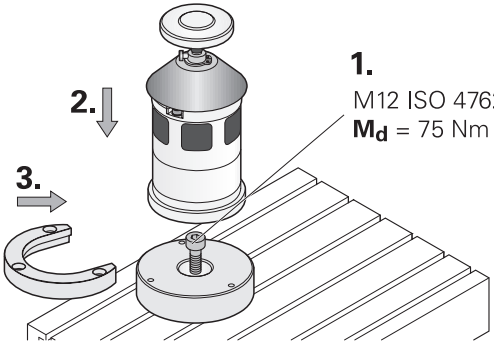


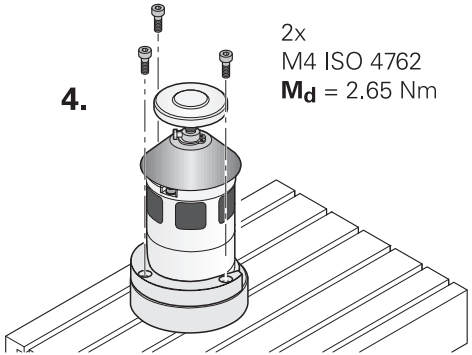

**Exchanging the connection pin / probe contact**
***Verbindungsstift / Antastelement wechseln***
**Remplacer la tige d'assemblage / l'élément de palpage**
***Sostituzione di spina di collegamento/elemento di tastatura***
**cambiar palpador / vástago de unión**

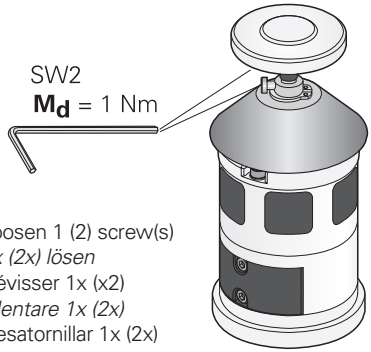


**1.**
Loosen 1 (2) screw(s)
*1x (2x) lösen*
Dévisser 1x (x2)
*Allentare 1x (2x)*
Desatornillar 1x (2x)

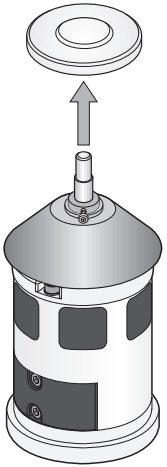

**2.**
Remove the probe contact
*Antastelement entnehmen*
Enlever l'élément de palpage
*Rimuovere l'elemento di tastatura*
Antastelement Retirar el elemento de palpación

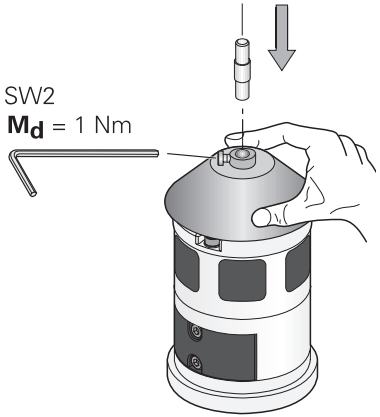


**3.**
Exchange the connection pin
*Verbindungsstift auswechseln*
Remplacer la tige d'assemblage
*Sostituire la spina di collegamento*
Cambiar el vástago de unión

Use a new screw (included in items supplied)
*neue Schraube verwenden (Lieferumfang)*
utiliser des vis neuves (fourniture standard)
*Utilizzare una vite nuova (standard di fornitura)*
utilizar un tornillo nuevo (alcance del suministro)

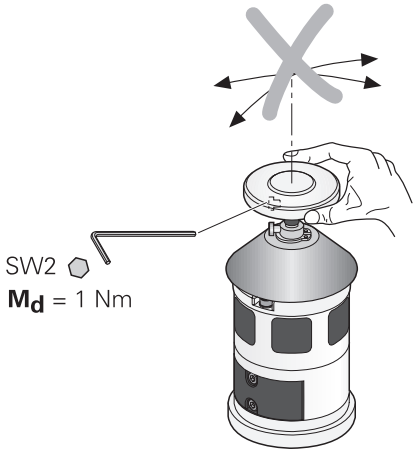


## 4.

Fasten the probe contact
*Antastelement befestigen*
Fixer l'élément de palpage
*Fissare l'elemento di tastatura*
Fijar el elemento de palpación

Use a new screw (included in items supplied)
*neue Schraube verwenden (Lieferumfang)*
utiliser des vis neuves (fourniture standard)
*Utilizzare una vite nuova (standard di fornitura)*
utilizar un tornillo nuevo (alcance del suministro)

## 5.

Recalibrate the touch probe (with calibration cycle of the control)
*Tastsystem neu kalibrieren (durch Kalibrierzyklus der Steuerung)*
Réétalonner le palpeur (avec cycle d'étalonnage de la commande)
*Ricalibrare il tastatore (con ciclo di calibrazione del controllo numerico)*
Calibrar de nuevo el palpador (con el ciclo de calibración del control)

**Caution:** Too much force can destroy the connection pin
***Achtung:*** *Krafteinwirkung kann Verbindungsstift zerstören*
**Attention:** la force exercée peut détériorer la tige d'assemblage
***Attenzione:*** *una forza eccessiva potrebbe rompere la spina di collegamento*
**Atención:** La aplicación de fuerza puede dañar el vástago de unión

**Exchanging the connection pin / probe contact**
Exchanging the connection pin / probe contact
Exchanging the connection pin / probe contact
Exchanging the connection pin / probe contact
Exchanging the connection pin / probe contact

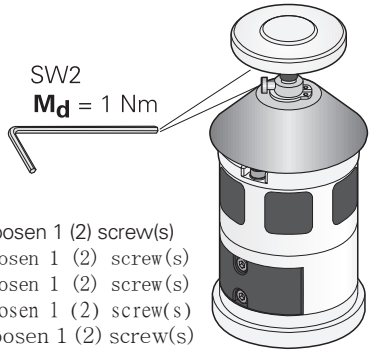


**1.**
Loosen 1 (2) screw(s)
Loosen 1 (2) screw(s)
Loosen 1 (2) screw(s)
Loosen 1 (2) screw(s)
Loosen 1 (2) screw(s)

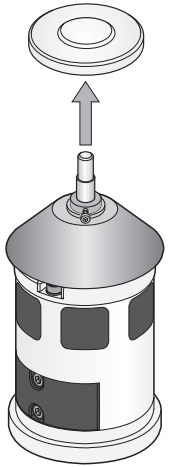

**2.**
Remove the probe contact
Remove the probe contact
Remove the probe contact
Remove the probe contact
Remove the probe contact

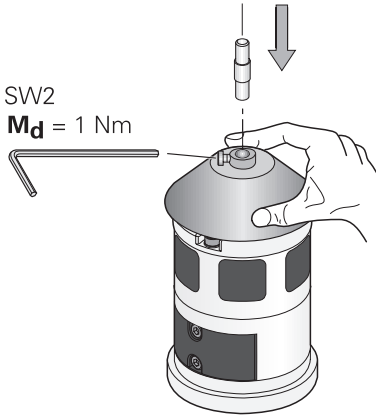


**3.**
Exchange the connection pin
Exchange the connection pin
Exchange the connection pin
Exchange the connection pin
Exchange the connection pin

Use a new screw (included in items supplied)
Use a new screw (included in items supplied)
Use a new screw (included in items supplied)
Use a new screw (included in items supplied)
Use a new screw (included in items supplied)

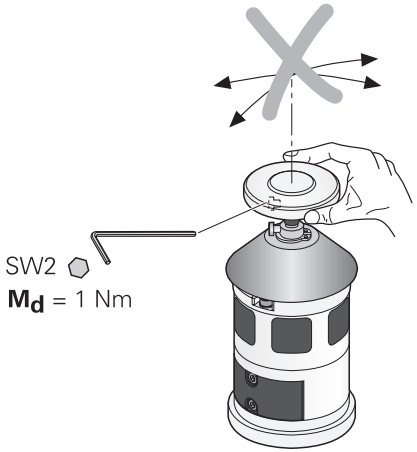


**4.**

Fasten the probe contact
Fasten the probe contact
Fasten the probe contact
Fasten the probe contact
Fasten the probe contact

Use a new screw (included in items supplied)
Use a new screw (included in items supplied)
Use a new screw (included in items supplied)
Use a new screw (included in items supplied)

**5.**

Recalibrate the touch probe (with calibration cycle of the control)
Recalibrate the touch probe (with calibration cycle of the control)
Recalibrate the touch probe (with calibration cycle of the control)
Recalibrate the touch probe (with calibration cycle of the control)

**Caution:** Too much force can destroy the connection pin
**Caution:** Too much force can destroy the connection pin
**Caution:** Too much force can destroy the connection pin
**Caution:** Too much force can destroy the connection pin
**Caution:** Too much force can destroy the connection pin

**Battery exchange**
***Batterienwechsel***
**Changement des batteries**
***Sostituzione delle batterie***
**Cambio de batería**

Included in the delivery: 2 LITHIUM batteries, 3.6 V, 1/2 AA
ID 332775-05. (Batteries not rechargeable)
*Im Lieferumfang enthalten: 2 Stück Batterien LITHIUM 3.6 V 1/2 AA*
*ID 332775-05. (Batterien nicht aufladbar)*
Inclus dans la fourniture: 2 x batteries LITHIUM 3.6 V 1/2 AA
ID 332775-05. (Batteries non rechargeables)
*Lo standard di fornitura comprende: 2x batterie LITHIUM 3,6 V 1/2 AA*
*ID 332775-05. (batterie non ricaricabili)*
Contenido entre los elementos suministrados: 2x baterías LITHIUM 3.6 V 1/2 AA
ID 332 775-04. (baterías no recargables)

Alkaline batteries or NiMH accumulators with 1 to 4 V can also be used.
*Alkaline-Batterien oder NIMH-Akkus mit 1 bis 4 V sind ebenfalls verwendbar.*
Utilisation possible des batteries alcalines ou accus NIMH de 1 à 4 V.
*Possono essere impiegate batterie alcaline o NIMH da 1 a 4 V.*
Asimismo pueden utilizarse baterías o acumuladores NIMH de 1 hasta 4 V.

open
*öffnen*
ouvrir
*aprire*
abrir

**1.**

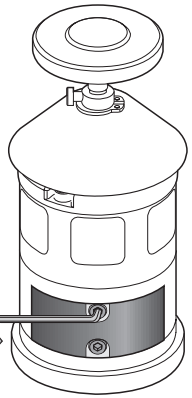

**2.**

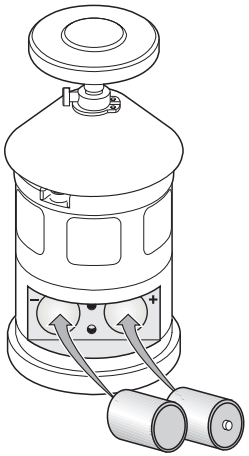


2x
**$M_d$** = 1.5 ± 0.2 Nm

**3.**

close
*schließen*
Fermer
*chiudere*
cerrar

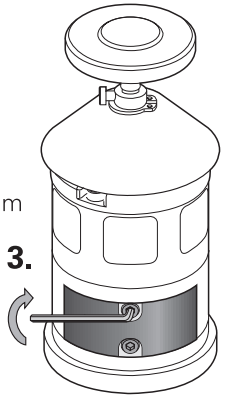

**Battery exchange**
**電池交換**
**更换电池**
**更換電池**
**배터리 교체**

Included in the delivery: 2 LITHIUM batteries, 3.6 V, 1/2 AA
ID 332775-05. (Batteries not rechargeable)
Included in the delivery: 2 LITHIUM batteries, 3.6 V, 1/2 AA
ID 332775-05. (Batteries not rechargeable)
Included in the delivery: 2 LITHIUM batteries, 3.6 V, 1/2 AA
ID 332775-05. (Batteries not rechargeable)
Included in the delivery: 2 LITHIUM batteries, 3.6 V, 1/2 AA
ID 332775-05. (Batteries not rechargeable)
Included in the delivery: 2 LITHIUM batteries, 3.6 V, 1/2 AA
ID 332775-05. (Batteries not rechargeable)

Alkaline batteries or NiMH accumulators with 1 to 4 V can also be used.
アルカリ電池もしくはニッケル水素電池（1～4V）も使用可能です。
也可用电压在1至4 V之间的碱性电池或NiMH镍氢电池。
任何 1 至 4 伏特鹼性電池或鎳氫電池皆可使用。
1~4V의 알칼리 배터리 또는 NiMH 축전지를 사용할 수도 있습니다.

open
開く
打开
開啟
열림

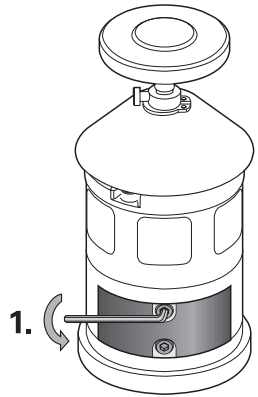


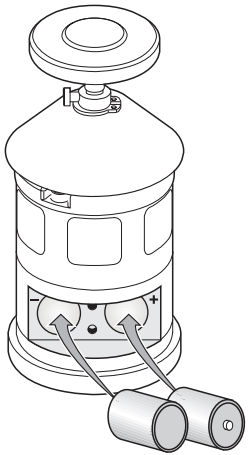


2x
**$M_d$** = 1.5 ± 0.2 Nm

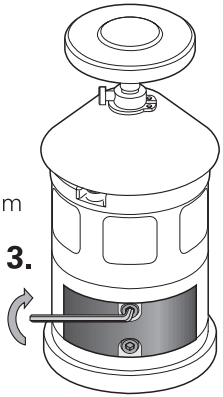


close
閉める
关闭
關閉
닫힘

**Centering**
***Zentrieren***
**Centrage**
***Centraggio***
**Centrado**

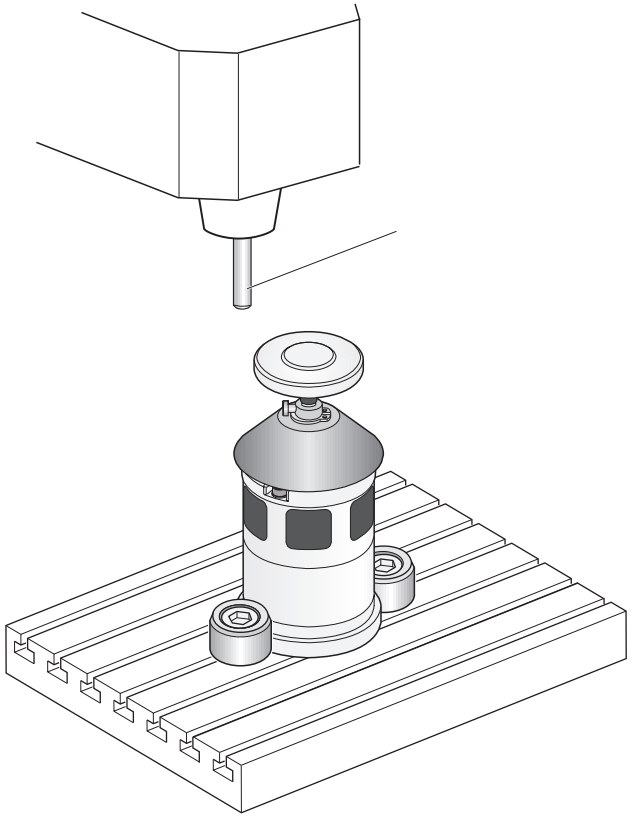

**Centering**
センタリング（校正）
定心
中心定位
센터링

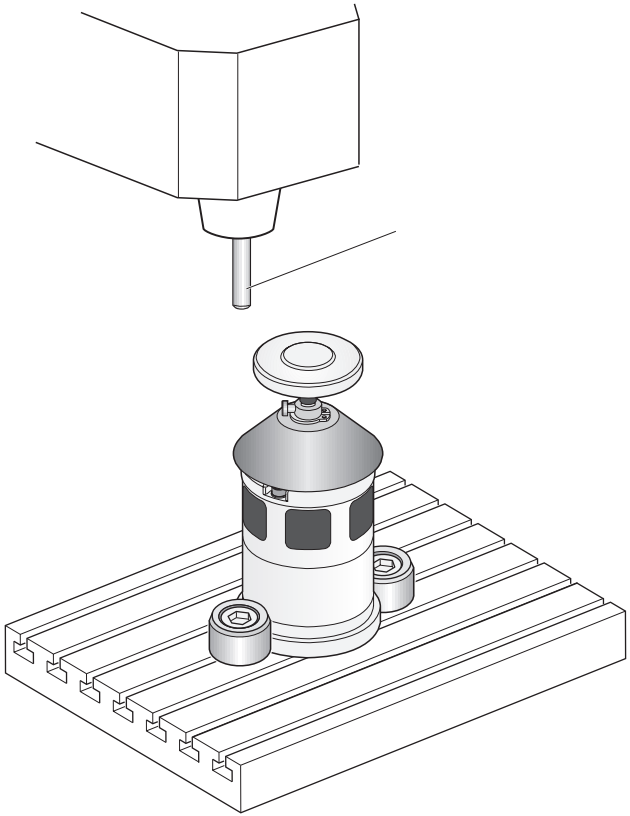

***Signal sequence***
**Signalfolge**
**Diagramme des signaux**
***Treno di segnali***
**Secuencia de la señal**

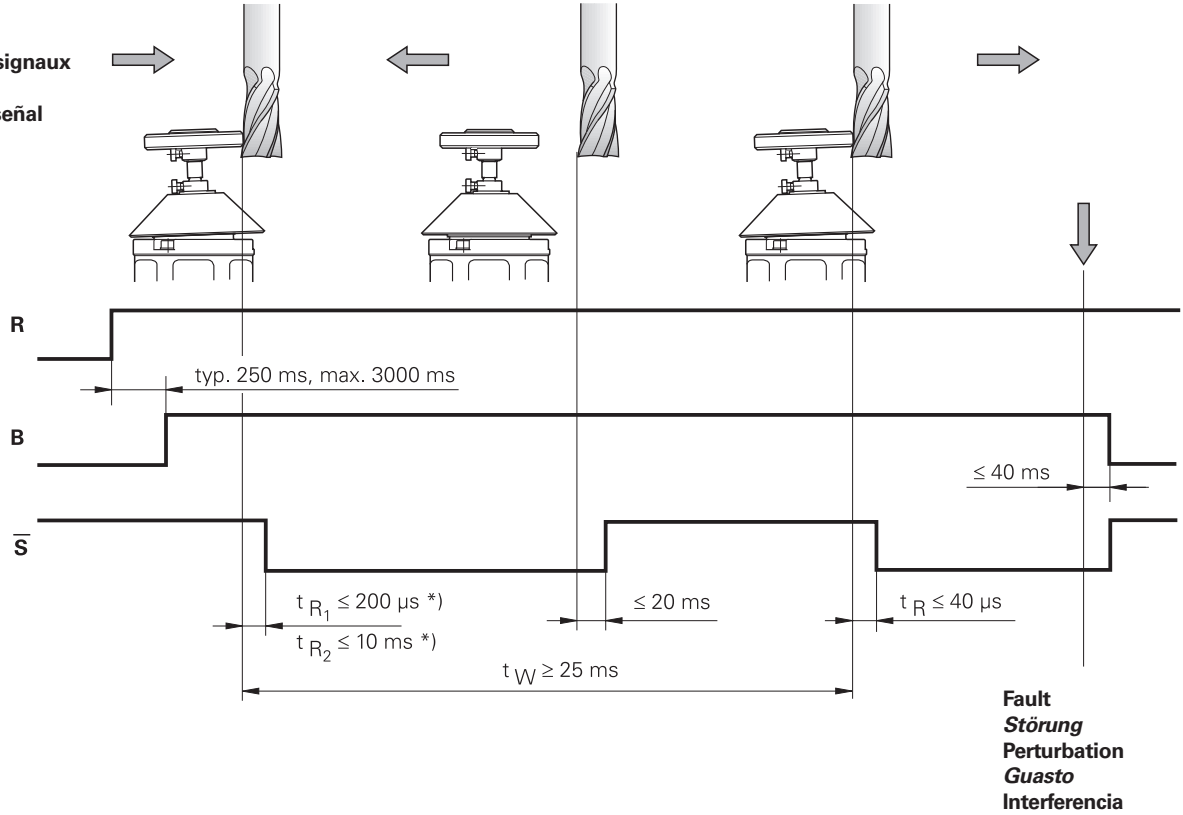


| | | |
|---|---|---|
| *) | $t_{R1}$= Infrared | $t_{R2}$= Radio |
| | *Infrarot* | *Funk* |
| | Infrarot | Funk |
| | *Infrarot* | *Funk* |
| | Infrarot | Funk |

**Signal sequence**
信号シーケンス
信号顺序
信號程序
신호 순서

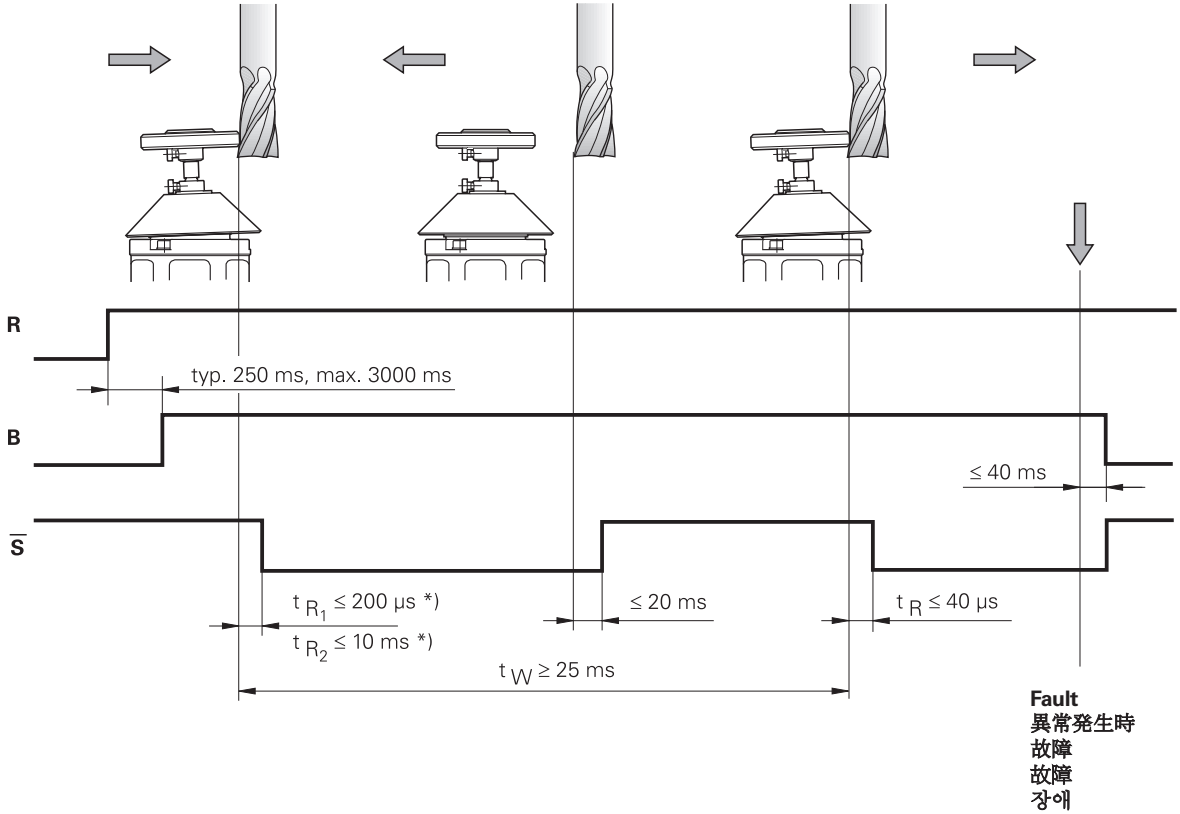


| | | | |
|---|---|---|---|
| *) | $t_{R1}$= Infrared | $t_{R2}$= Radio |
| | Infrared | Radio |
| | Infrared | Radio |
| | Infrared | Radio |
| | Infrared | Radio |

HEIDENHAIN

**DR. JOHANNES HEIDENHAIN GmbH**
Dr.-Johannes-Heidenhain-Straße 5
**83301 Traunreut, Germany**
☏ +49 8669 31-0
FAX +49 8669 5061
E-mail: info@heidenhain.de

**Technical support** FAX +49 8669 32-1000
**Measuring systems** ☏ +49 8669 31-3104
E-mail: service.ms-support@heidenhain.de
**TNC support** ☏ +49 8669 31-3101
E-mail: service.nc-support@heidenhain.de
**NC programming** ☏ +49 8669 31-3103
E-mail: service.nc-pgm@heidenhain.de
**PLC programming** ☏ +49 8669 31-3102
E-mail: service.plc@heidenhain.de
**Lathe controls** ☏ +49 8669 31-3105
E-mail: service.lathe-support@heidenhain.de

**www.heidenhain.de**

808655-90 · Ver00 · Printed in Germany · 7/2013 · H

CE