GENERAL INSTRUCTIONS:

SUPPLIER TO INSURE CORRECT REVISION LEVEL DWG FOR PRODUCTION. CONTACT SBD PURCHASING DEPT. FOR LATEST REVISION LEVEL DWG.

CONTACT SBD GRAPHICS DESIGN FOR ORIGINAL ARTWORK, COLOR STANDARDS AND CORPORATE GUIDELINES.

PROOFS OF ALL REVISIONS THAT AFFECT ARTWORK AND ALL NEW COLOR FORMULATIONS MUST BE SUBMITTED TO SBD GRAPHICS DESIGN FOR APPROVAL PRIOR TO MAKING PRODUCTION PARTS. SEE EP-1006.

SUPPLIER TO PROVIDE SBD GRAPHICS DESIGN WITH 6 SAMPLES OF ALL PRODUCTION PARTS. MARK SBD PART NO. AND REVISION LEVEL.

COLOR VARIATIONS:

- ■ = PMS Black
- □ = PMS White
- ■ = DEWALT Yellow
- ■ = ANSI Orange (Pantone 172)
- ■ = ANSI Red (Pantone 185)

LABEL APPLICATION

□ TEXTURED ■ NON-TEXTURED	□ RULED (one curve) ■ FLAT □ COMPOUND	□ OUTDOOR USE ■ INDOOR USE

ADHESION: ■ PERMANENT □ REMOVEABLE □ OTHER

SYNTHETIC LABEL CONSTRUCTION:

SUPPLIER NAME:	SUGGESTED LABEL MATERIAL:
TBD	5 MIL MATTE POLYCARBONATE, SUB-SURFACED PRINTED, 2 MIL ACRYLIC ADHESIVE MATTE TEXTURED

SPECIAL NOTES:

1. SERIAL NO'S TO BE SUB-SURFACE PRINTED. 4 DIGITS MIN. (START WITH 1001). RANDOM ORDER ACCEPTABLE. NO TWO NAMEPLATES TO HAVE IDENTICAL NO'S. SEQUENCE TO BE ASSIGNED BY SBD PURCHASING DEPT. (APPLICABLE TO DEWALT PRODUCT ONLY.)
2. LABELS TO BE ORIENTED AS SHOWN ON ROLL WITH COPY READING LEFT TO RIGHT.
3. ALLOW FOR 36" TRAILER AND 36" LEADER.
4. REYNOSA AND MONTERREY LABELS MUST BE SET UP ON ROLLS.
5. REFER TO EP-69 FOR DATE CODE SPECS AND PROCEDURES.
6. REFER TO EP-69 FOR QR CODE DATA AND URL SPECIFICATIONS.
7. FINISHED LABEL MUST BE A "UL" AND "CSA" RECOGNIZED LABELING SYSTEM (UL STANDARD: UL969, UL CATEGORY CODE: PGDQ2; CSA STANDARD: C22.2 NO. 0.15, CSA CLASS: 7921) AND APPROVED FOR THE SURFACE THAT THE LABEL WILL BE APPLIED TO UNLESS STANLEY BLACK & DECKER AGREES TO A DEVIATION.
8. LABEL MANUFACTURER IS RESPONSIBLE TO PLACE THEIR MANUFACTURER'S CODE ON LABEL. IN THE SIZE AND LOCATION INDICATED ON THIS DOCUMENT.
9. INK USED MUST BE UV STABILIZED.
10. ALL MATERIALS MUST COMPLY WITH ES100118.
11. LABELS SHALL BE LEGIBLE, SHALL NOT WORK LOOSE, AND SHALL NOT BECOME CURLED AT THE EDGES AFTER BEING RUBBED BY HAND FOR 15 SECONDS WITH A CLOTH SOAKED IN WATER AND AGAIN FOR 15 SECONDS WITH A CLOTH SOAKED IN PETROLEUM SPIRIT. THE PETROLEUM SPIRIT TO BE USED FOR THE TEST SHALL BE A REAGENT GRADE HEXANE WITH A MINIMUM OF 85% AS N-HEXANE.
12. LABEL CONSTRUCTION: WILL MEET THE DURABILITY REQUIREMENTS AND ALSO PROVIDES THE VISUAL CONSISTENCY WITH OTHER DEWALT BRAND PRODUCTS.
13. LABEL MUST SATISFY LUBRICATING OIL IMMERSION TEST PER UL969 OR CSA C22.2 # 0.15
14. LABEL MUST SATISFY 80°C MAX TEMPERATURE RATING PER UL969 OR CSA C22.2 #0.15.
15. LABEL MUST BE APPROVED FOR NON-DRY INDOOR USE PER UL969 AND CSA C22.2 NO. 0.15
16. ALL SHIPPING BOXES AND ROLL CORES OR LABEL SHEETS MUST BE MARKED WITH VENDOR'S NAME, TRADE NAME, DATE OF MANUFACTURE AND MATERIAL IDENTIFICATION PER ES100135.

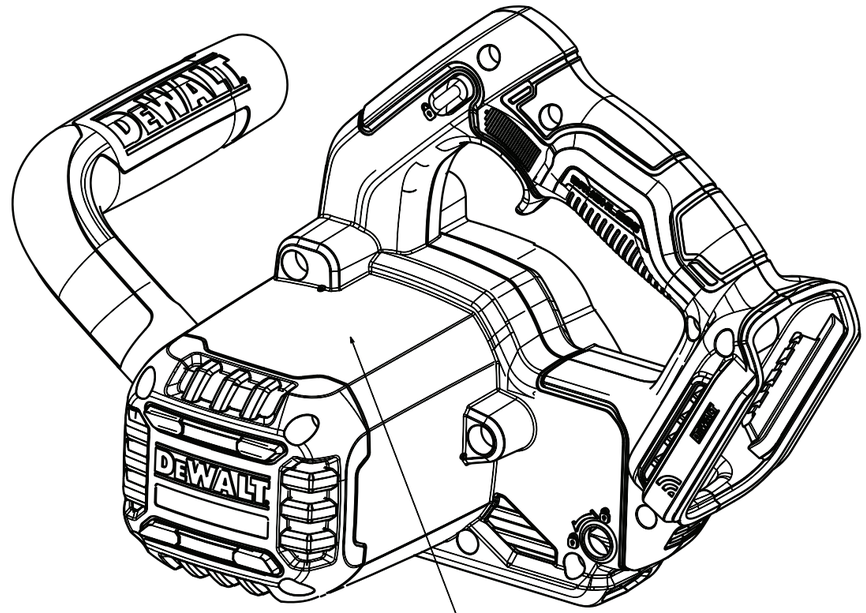

ISOMETRIC VIEW
SCALE: 1:1

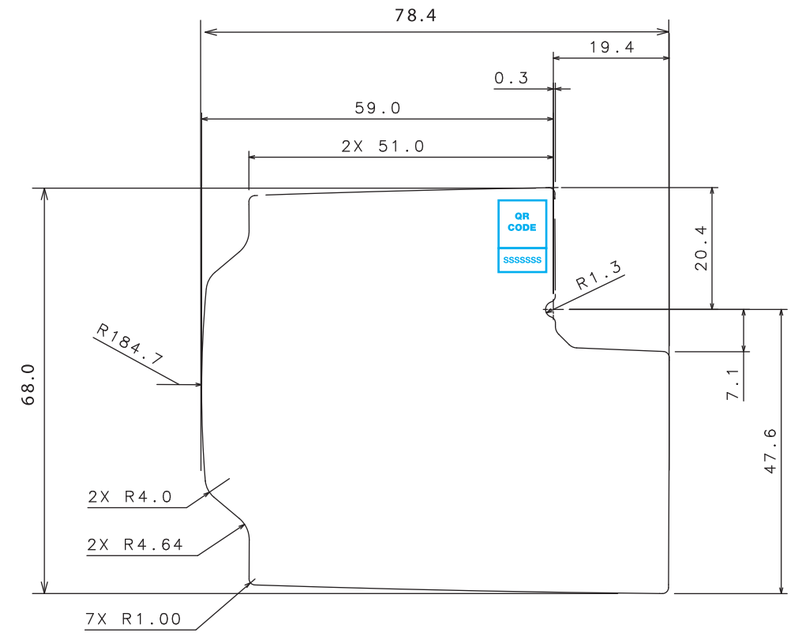

FRONT VIEW

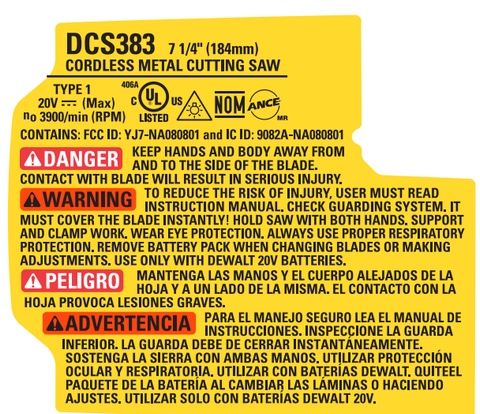

NA383413

THIS DOCUMENT IS THE PROPERTY OF STANLEY BLACK & DECKER INC.

THE CONTENTS OF THIS DOCUMENT ARE CONFIDENTIAL AND CONSTITUTE TRADE SECRETS PROPRIETARY TO STANLEY BLACK & DECKER INC.

NEITHER THIS DOCUMENT NOR ITS' CONTENTS SHALL BE DISCLOSED TO ANY UNAUTHORIZED PERSON, COPIED OR PUBLISHED WITHOUT PRIOR WRITTEN CONSENT OF STANLEY BLACK & DECKER INC.

COPYRIGHT © 2024 STANLEY BLACK & DECKER INC.

TOL UNLESS SPECIFIED
0 & 1 PLC DEC: ± 0.4
ANGLES: ± 1°
ALL DIMENSIONS mm

SIZE:

SHEET: 1 of 1

StanleyBlack&Decker

FOR ITEM DATA SEE PRINTED REPORT