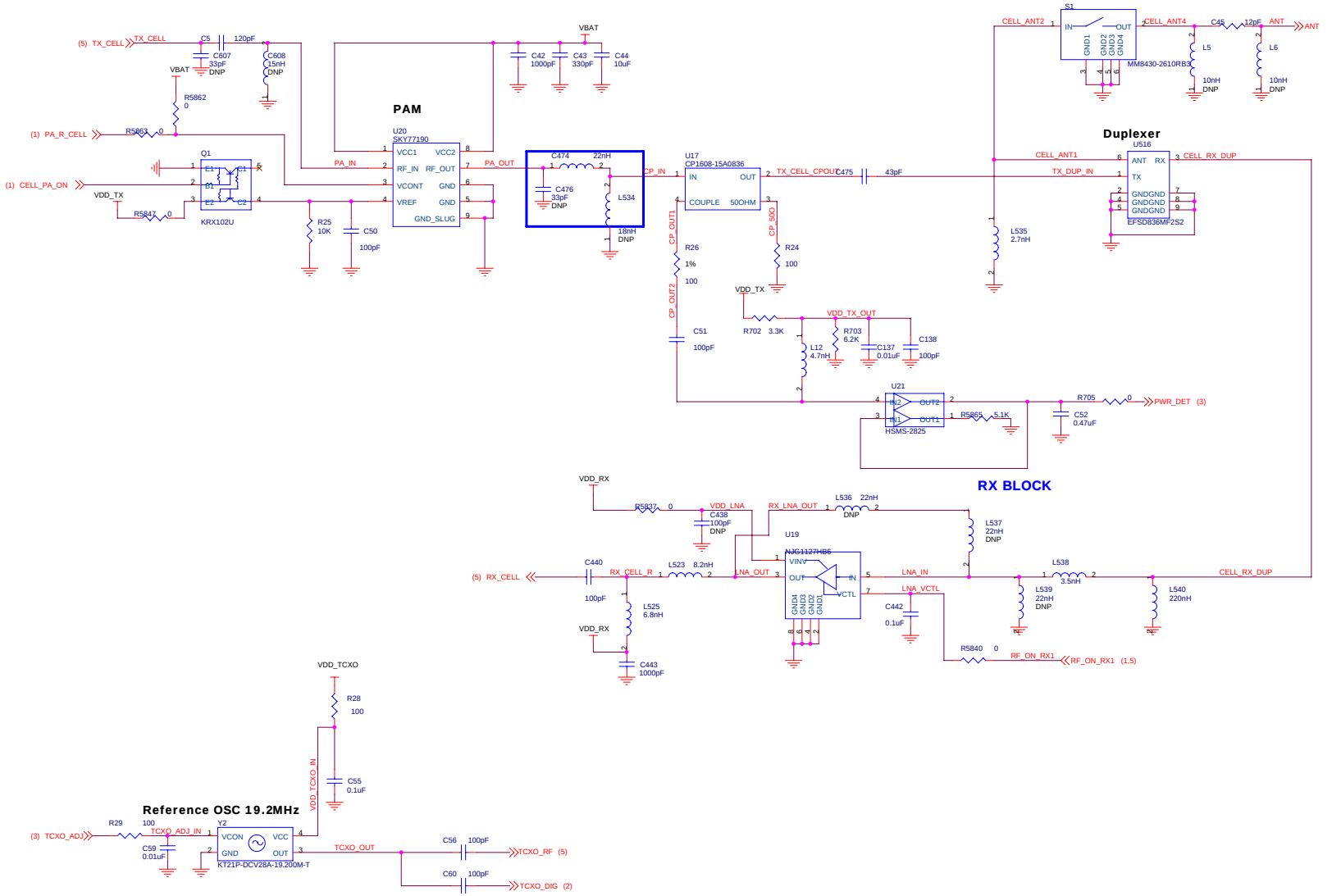
PAM
U20
SKY77190
VCC1
VCC2
RF_IN
RF_OUT
VCONT
GND
VREF
GND
GND_SLUG
Q1
KRX102U
(5) TX_CELL
TX_CELL
C5
120pF
C607
33pF
DNP
C608
15nH
DNP
VBAT
R5862
0
(1) PA_R_CELL
R5863
0
(1) CELL_PA_ON
VDD_TX
R5847
0
PA_IN
PA_OUT
R25
10K
C50
100pF
C42
1000pF
C43
330pF
C44
10uF
C474
22nH
C476
33pF
DNP
L534
18nH
DNP
CP_IN
U17
CP1608-15A0836
IN
OUT
COUPLE
50OHM
TX_CELL_CPOUT
C475
43pF
CP_OUT1
CP_OUT2
R26
1%
100
C51
100pF
CP_50O
R24
100
VDD_TX
R702
3.3K
VDD_TX_OUT
R703
6.2K
C137
0.01uF
C138
100pF
L12
4.7nH
U21
HSMS-2825
R5865
5.1K
R705
0
PWR_DET (3)
C52
0.47uF
S1
MM8430-2610RB3
CELL_ANT2
CELL_ANT4
C45
12pF
ANT
ANT
L5
10nH
DNP
L6
10nH
DNP
Duplexer
U516
ANT
RX
TX
GNDGND
EFSD836MF2S2
CELL_ANT1
CELL_RX_DUP
TX_DUP_IN
L535
2.7nH
RX BLOCK
VDD_RX
R5837
0
VDD_LNA
C438
100pF
DNP
RX_LNA_OUT
L536
22nH
DNP
L537
22nH
DNP
U19
NJG1127HB6
VINV
OUT
IN
VCTL
GND4
GND3
GND2
GND1
(5) RX_CELL
C440
100pF
RX_CELL_R
L523
8.2nH
LNA_OUT
LNA_IN
LNA_VCTL
C442
0.1uF
L525
6.8nH
C443
1000pF
L538
3.5nH
L539
22nH
DNP
L540
220nH
R5840
0
RF_ON_RX1
RF_ON_RX1 (1.5)
VDD_TCXO
R28
100
C55
0.1uF
VDD_TCXO_IN
Reference OSC 19.2MHz
(3) TCXO_ADJ
R29
100
TCXO_ADJ_IN
C59
0.01uF
Y2
VCON
VCC
GND
OUT
KT21P-DCV28A-19.200M-T
TCXO_OUT
C56
100pF
TCXO_RF (5)
C60
100pF
TCXO_DIG (2)

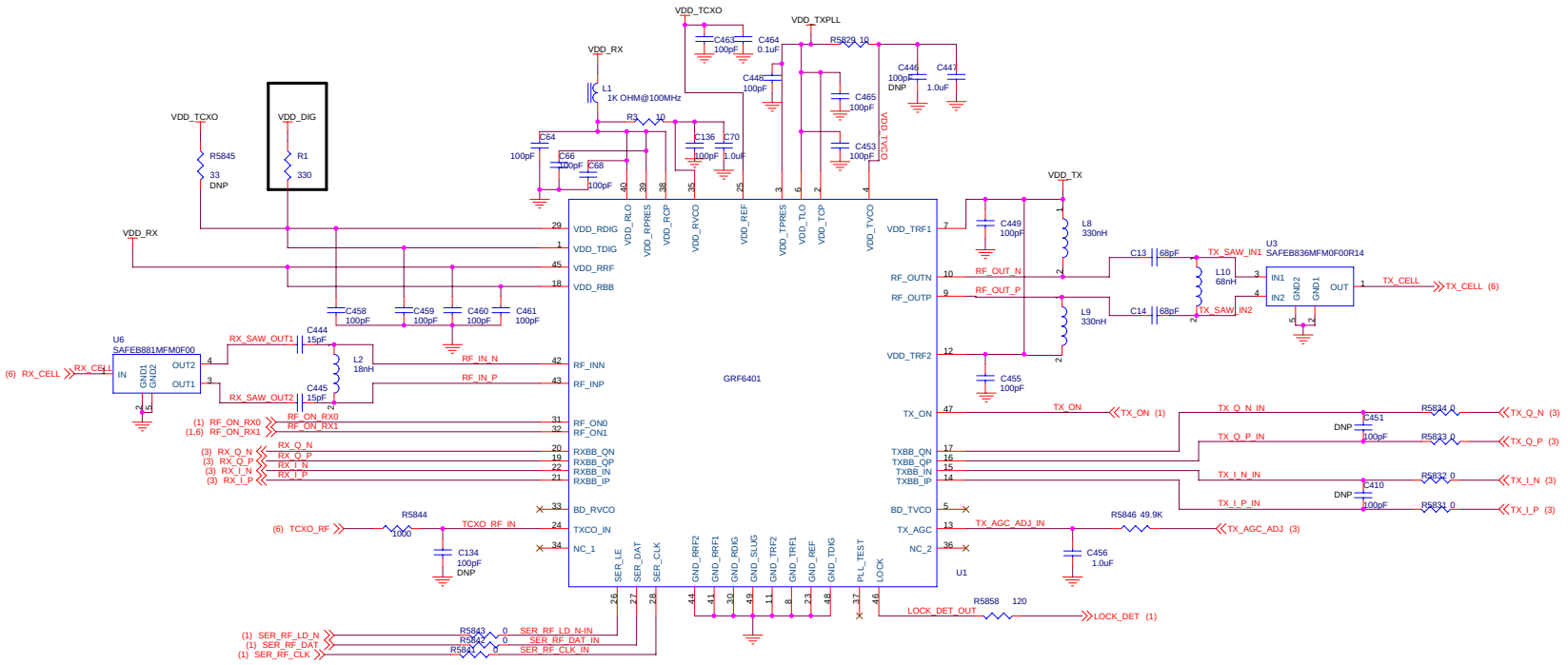
VDD_TCXO
VDD_TXPLL
VDD_RX
VDD_DIG
VDD_TX
C463 100pF
C464 0.1uF
R5829 10
C446 100pF DNP
C447 1.0uF
C448 100pF
C465 100pF
C453 100pF
VDD_TVCO
L1 1K OHM@100MHz
R3 10
C64 100pF
C66 100pF
C68 100pF
C136 100pF
C70 1.0uF
R5845 33 DNP
R1 330
C458 100pF
C459 100pF
C460 100pF
C461 100pF
C449 100pF
L8 330nH
C13 68pF
TX_SAW_IN1
U3 SAFEB836MFM0F00R14
L10 68nH
IN1
IN2
GND2
GND1
OUT
TX_CELL
TX_CELL (6)
RF_OUT_N
RF_OUT_P
C14 68pF
TX_SAW_IN2
L9 330nH
C455 100pF
U6 SAFEB881MFM0F00
(6) RX_CELL
RX_CELL
IN
OUT2
OUT1
RX_SAW_OUT1
C444 15pF
L2 18nH
RF_IN_N
RF_IN_P
RX_SAW_OUT2
C445 15pF
(1) RF_ON_RX0
(1,6) RF_ON_RX1
RF_ON_RX0
RF_ON_RX1
(3) RX_Q_N
(3) RX_Q_P
(3) RX_I_N
(3) RX_I_P
RX_Q_N
RX_Q_P
RX_I_N
RX_I_P
(6) TCXO_RF
R5844 1000
TCXO_RF_IN
C134 100pF DNP
GRF6401
VDD_RDIG
VDD_TDIG
VDD_RRF
VDD_RBB
VDD_RLO
VDD_RPRES
VDD_RCP
VDD_RVCO
VDD_REF
VDD_TPRES
VDD_TLO
VDD_TCP
VDD_TVCO
VDD_TRF1
RF_OUTN
RF_OUTP
VDD_TRF2
RF_INN
RF_INP
TX_ON
TXBB_QN
TXBB_QP
TXBB_IN
TXBB_IP
BD_RVCO
TXCO_IN
NC_1
BD_TVCO
TX_AGC
NC_2
U1
TX_ON
TX_ON (1)
TX_Q_N_IN
TX_Q_P_IN
TX_I_N_IN
TX_I_P_IN
C451 100pF DNP
C410 100pF DNP
R5834 0
R5833 0
R5832 0
R5831 0
TX_Q_N (3)
TX_Q_P (3)
TX_I_N (3)
TX_I_P (3)
TX_AGC_ADJ_IN
R5846 49.9K
C456 1.0uF
TX_AGC_ADJ (3)
SER_LE
SER_DAT
SER_CLK
GND_RRF2
GND_RRF1
GND_RDIG
GND_SLUG
GND_TRF2
GND_TRF1
GND_REF
GND_TDIG
PLL_TEST
LOCK
R5858 120
LOCK_DET_OUT
LOCK_DET (1)
(1) SER_RF_LD_N
(1) SER_RF_DAT
(1) SER_RF_CLK
R5843 0
R5842 0
R5841 0
SER_RF_LD_N-IN
SER_RF_DAT_IN
SER_RF_CLK_IN

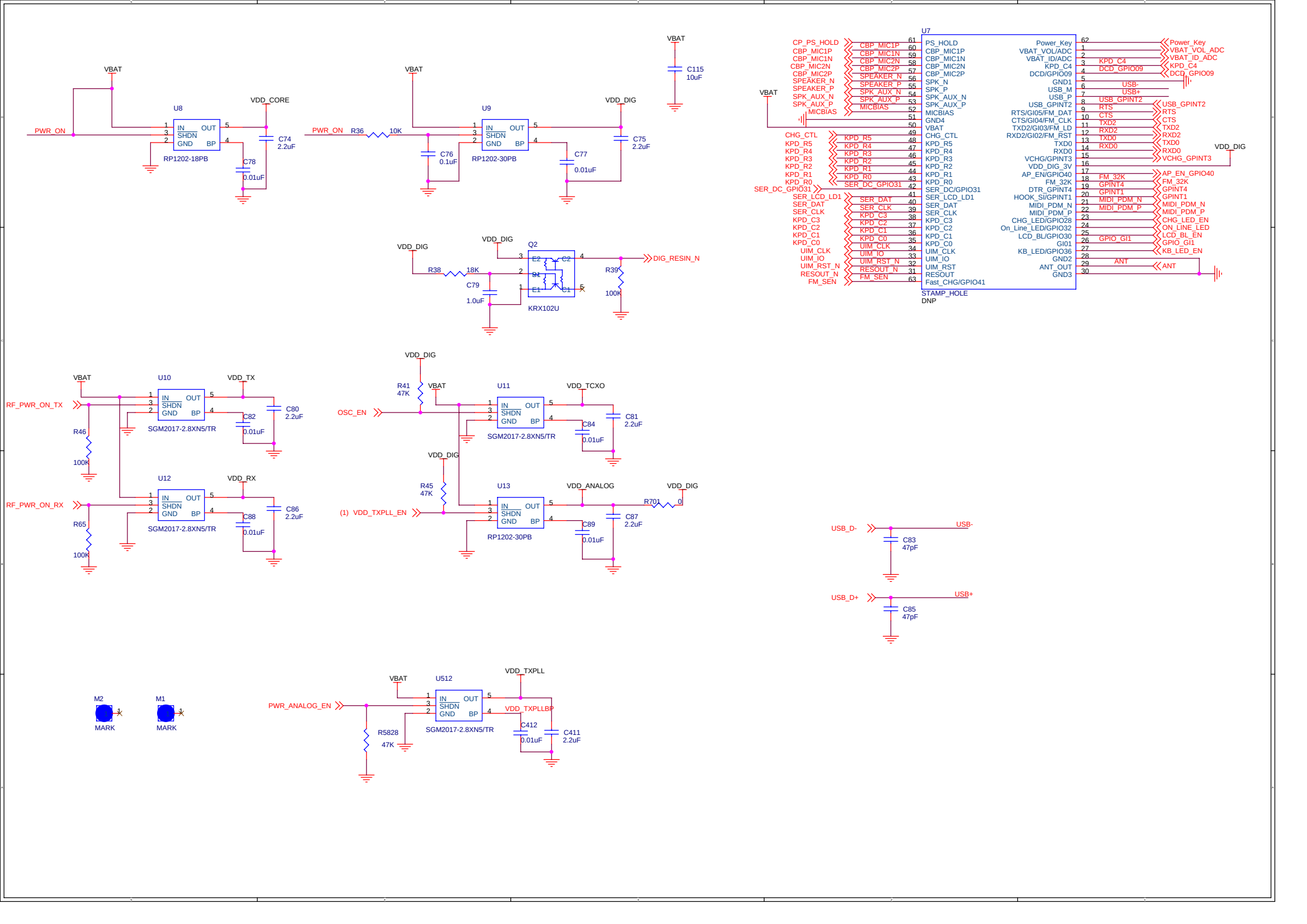
U8
RP1202-18PB
VBAT
VDD_CORE
PWR_ON
C74 2.2uF
C78 0.01uF
U9
RP1202-30PB
R36 10K
C76 0.1uF
C77 0.01uF
C75 2.2uF
VDD_DIG
C115 10uF
Q2
KRX102U
R38 18K
C79 1.0uF
R39 100K
DIG_RESIN_N
U7
STAMP_HOLE
DNP
Power_Key
VBAT_VOL_ADC
VBAT_ID_ADC
KPD_C4
DCD_GPIO09
USB-
USB+
USB_GPINT2
RTS
CTS
TXD2
RXD2
TXD0
RXD0
VCHG_GPINT3
AP_EN_GPIO40
FM_32K
GPINT4
GPINT1
MIDI_PDM_N
MIDI_PDM_P
CHG_LED_EN
ON_LINE_LED
LCD_BL_EN
GPIO_GI1
KB_LED_EN
ANT
U10
SGM2017-2.8XN5/TR
RF_PWR_ON_TX
R46 100K
C80 2.2uF
C82 0.01uF
U12
RF_PWR_ON_RX
R65 100K
C86 2.2uF
C88 0.01uF
U11
OSC_EN
R41 47K
VDD_TCXO
C81 2.2uF
C84 0.01uF
U13
(1) VDD_TXPLL_EN
R45 47K
VDD_ANALOG
R701 0
C87 2.2uF
C89 0.01uF
USB_D-
C83 47pF
USB_D+
C85 47pF
M2
M1
MARK
U512
PWR_ANALOG_EN
R5828 47K
VDD_TXPLL
VDD_TXPLLBP
C412 0.01uF
C411 2.2uF

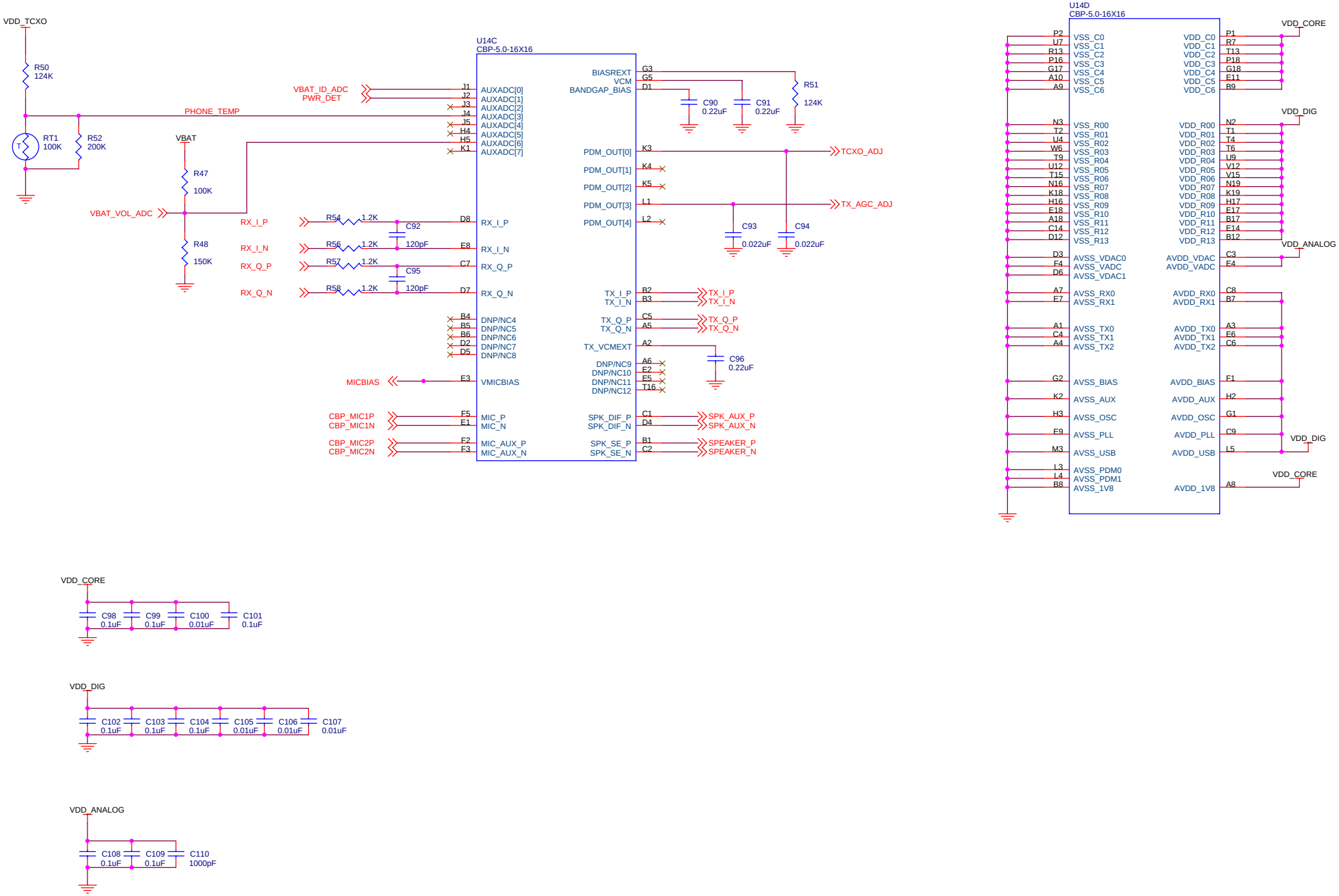
VDD_TCXO
R50
124K
RT1
100K
R52
200K
PHONE_TEMP
VBAT
R47
100K
R48
150K
VBAT_VOL_ADC
VBAT_ID_ADC
PWR_DET
RX_I_P
RX_I_N
RX_Q_P
RX_Q_N
R54 1.2K
R56 1.2K
R57 1.2K
R58 1.2K
C92 120pF
C95 120pF
MICBIAS
CBP_MIC1P
CBP_MIC1N
CBP_MIC2P
CBP_MIC2N
U14C
CBP-5.0-16X16
AUXADC[0]
AUXADC[1]
AUXADC[2]
AUXADC[3]
AUXADC[4]
AUXADC[5]
AUXADC[6]
AUXADC[7]
RX_I_P
RX_I_N
RX_Q_P
RX_Q_N
DNP/NC4
DNP/NC5
DNP/NC6
DNP/NC7
DNP/NC8
VMICBIAS
MIC_P
MIC_N
MIC_AUX_P
MIC_AUX_N
BIASREXT
VCM
BANDGAP_BIAS
PDM_OUT[0]
PDM_OUT[1]
PDM_OUT[2]
PDM_OUT[3]
PDM_OUT[4]
TX_I_P
TX_I_N
TX_Q_P
TX_Q_N
TX_VCMEXT
DNP/NC9
DNP/NC10
DNP/NC11
DNP/NC12
SPK_DIF_P
SPK_DIF_N
SPK_SE_P
SPK_SE_N
C90 0.22uF
C91 0.22uF
R51 124K
TCXO_ADJ
TX_AGC_ADJ
C93 0.022uF
C94 0.022uF
TX_I_P
TX_I_N
TX_Q_P
TX_Q_N
C96 0.22uF
SPK_AUX_P
SPK_AUX_N
SPEAKER_P
SPEAKER_N
U14D
CBP-5.0-16X16
VDD_CORE
VDD_DIG
VDD_ANALOG
VSS_C0
VSS_C1
VSS_C2
VSS_C3
VSS_C4
VSS_C5
VSS_C6
VSS_R00
VSS_R01
VSS_R02
VSS_R03
VSS_R04
VSS_R05
VSS_R06
VSS_R07
VSS_R08
VSS_R09
VSS_R10
VSS_R11
VSS_R12
VSS_R13
AVSS_VDAC0
AVSS_VADC
AVSS_VDAC1
AVSS_RX0
AVSS_RX1
AVSS_TX0
AVSS_TX1
AVSS_TX2
AVSS_BIAS
AVSS_AUX
AVSS_OSC
AVSS_PLL
AVSS_USB
AVSS_PDM0
AVSS_PDM1
AVSS_1V8
VDD_C0
VDD_C1
VDD_C2
VDD_C3
VDD_C4
VDD_C5
VDD_C6
VDD_R00
VDD_R01
VDD_R02
VDD_R03
VDD_R04
VDD_R05
VDD_R06
VDD_R07
VDD_R08
VDD_R09
VDD_R10
VDD_R11
VDD_R12
VDD_R13
AVDD_VDAC
AVDD_VADC
AVDD_RX0
AVDD_RX1
AVDD_TX0
AVDD_TX1
AVDD_TX2
AVDD_BIAS
AVDD_AUX
AVDD_OSC
AVDD_PLL
AVDD_USB
AVDD_1V8
VDD_CORE
C98 0.1uF
C99 0.1uF
C100 0.01uF
C101 0.1uF
VDD_DIG
C102 0.1uF
C103 0.1uF
C104 0.1uF
C105 0.01uF
C106 0.01uF
C107 0.01uF
VDD_ANALOG
C108 0.1uF
C109 0.1uF
C110 1000pF

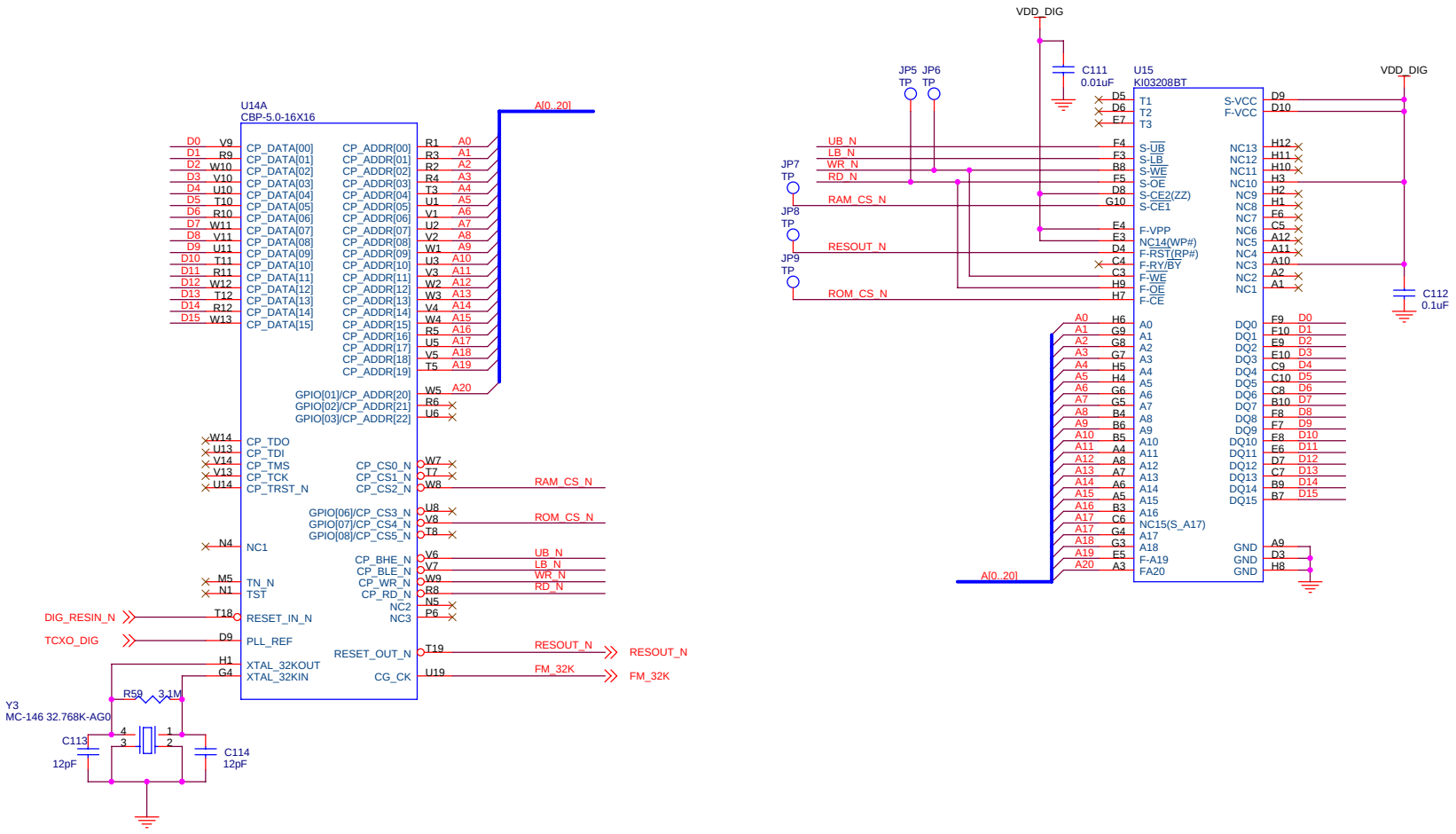
U14A
CBP-5.0-16X16
A[0..20]
CP_DATA[00]
CP_DATA[01]
CP_DATA[02]
CP_DATA[03]
CP_DATA[04]
CP_DATA[05]
CP_DATA[06]
CP_DATA[07]
CP_DATA[08]
CP_DATA[09]
CP_DATA[10]
CP_DATA[11]
CP_DATA[12]
CP_DATA[13]
CP_DATA[14]
CP_DATA[15]
CP_ADDR[00]
CP_ADDR[01]
CP_ADDR[02]
CP_ADDR[03]
CP_ADDR[04]
CP_ADDR[05]
CP_ADDR[06]
CP_ADDR[07]
CP_ADDR[08]
CP_ADDR[09]
CP_ADDR[10]
CP_ADDR[11]
CP_ADDR[12]
CP_ADDR[13]
CP_ADDR[14]
CP_ADDR[15]
CP_ADDR[16]
CP_ADDR[17]
CP_ADDR[18]
CP_ADDR[19]
GPIO[01]/CP_ADDR[20]
GPIO[02]/CP_ADDR[21]
GPIO[03]/CP_ADDR[22]
CP_TDO
CP_TDI
CP_TMS
CP_TCK
CP_TRST_N
CP_CS0_N
CP_CS1_N
CP_CS2_N
RAM_CS_N
GPIO[06]/CP_CS3_N
GPIO[07]/CP_CS4_N
GPIO[08]/CP_CS5_N
ROM_CS_N
NC1
CP_BHE_N
CP_BLE_N
CP_WR_N
CP_RD_N
UB_N
LB_N
WR_N
RD_N
TN_N
TST
NC2
NC3
DIG_RESIN_N
RESET_IN_N
TCXO_DIG
PLL_REF
RESET_OUT_N
RESOUT_N
XTAL_32KOUT
XTAL_32KIN
CG_CK
FM_32K
R59 3.1M
Y3
MC-146 32.768K-AG0
C113
12pF
C114
12pF
VDD_DIG
C111
0.01uF
JP5
JP6
JP7
JP8
JP9
TP
U15
KI03208BT
T1
T2
T3
S-VCC
F-VCC
S-UB
S-LB
S-WE
S-OE
S-CE2(ZZ)
S-CE1
F-VPP
NC14(WP#)
F-RST(RP#)
F-RY/BY
F-WE
F-OE
F-CE
NC13
NC12
NC11
NC10
NC9
NC8
NC7
NC6
NC5
NC4
NC3
NC2
NC1
A0
A1
A2
A3
A4
A5
A6
A7
A8
A9
A10
A11
A12
A13
A14
A15
A16
NC15(S_A17)
A17
A18
F-A19
FA20
DQ0
DQ1
DQ2
DQ3
DQ4
DQ5
DQ6
DQ7
DQ8
DQ9
DQ10
DQ11
DQ12
DQ13
DQ14
DQ15
GND
C112
0.1uF

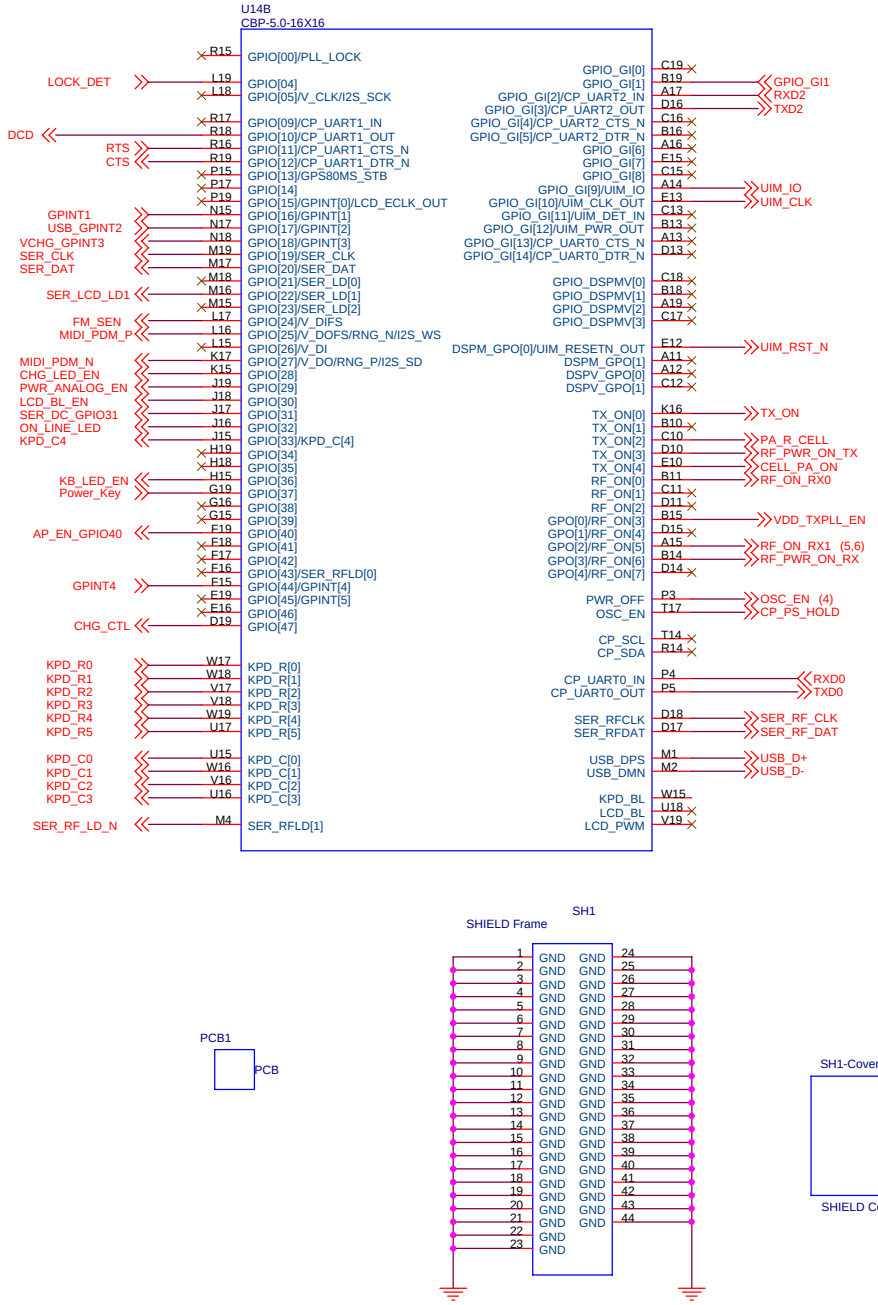
U14B
CBP-5.0-16X16
R15 GPIO[00]/PLL_LOCK
LOCK_DET L19 GPIO[04]
L18 GPIO[05]/V_CLK/I2S_SCK
R17 GPIO[09]/CP_UART1_IN
DCD R18 GPIO[10]/CP_UART1_OUT
RTS R16 GPIO[11]/CP_UART1_CTS_N
CTS R19 GPIO[12]/CP_UART1_DTR_N
P15 GPIO[13]/GPS80MS_STB
P17 GPIO[14]
P19 GPIO[15]/GPINT[0]/LCD_ECLK_OUT
GPINT1 N15 GPIO[16]/GPINT[1]
USB_GPINT2 N17 GPIO[17]/GPINT[2]
VCHG_GPINT3 N18 GPIO[18]/GPINT[3]
SER_CLK M19 GPIO[19]/SER_CLK
SER_DAT M17 GPIO[20]/SER_DAT
M18 GPIO[21]/SER_LD[0]
SER_LCD_LD1 M16 GPIO[22]/SER_LD[1]
M15 GPIO[23]/SER_LD[2]
FM_SEN L17 GPIO[24]/V_DIFS
MIDI_PDM_P L16 GPIO[25]/V_DOFS/RNG_N/I2S_WS
L15 GPIO[26]/V_DI
MIDI_PDM_N K17 GPIO[27]/V_DO/RNG_P/I2S_SD
CHG_LED_EN K15 GPIO[28]
PWR_ANALOG_EN J19 GPIO[29]
LCD_BL_EN J18 GPIO[30]
SER_DC_GPIO31 J17 GPIO[31]
ON_LINE_LED J16 GPIO[32]
KPD_C4 J15 GPIO[33]/KPD_C[4]
H19 GPIO[34]
H18 GPIO[35]
KB_LED_EN H15 GPIO[36]
Power_Key G19 GPIO[37]
G16 GPIO[38]
G15 GPIO[39]
AP_EN_GPIO40 F19 GPIO[40]
F18 GPIO[41]
F17 GPIO[42]
F16 GPIO[43]/SER_RFLD[0]
GPINT4 F15 GPIO[44]/GPINT[4]
E19 GPIO[45]/GPINT[5]
E16 GPIO[46]
CHG_CTL D19 GPIO[47]
KPD_R0 W17 KPD_R[0]
KPD_R1 W18 KPD_R[1]
KPD_R2 V17 KPD_R[2]
KPD_R3 V18 KPD_R[3]
KPD_R4 W19 KPD_R[4]
KPD_R5 U17 KPD_R[5]
KPD_C0 U15 KPD_C[0]
KPD_C1 W16 KPD_C[1]
KPD_C2 V16 KPD_C[2]
KPD_C3 U16 KPD_C[3]
SER_RF_LD_N M4 SER_RFLD[1]
GPIO_GI[0] C19
GPIO_GI[1] B19 GPIO_GI1
GPIO_GI[2]/CP_UART2_IN A17 RXD2
GPIO_GI[3]/CP_UART2_OUT D16 TXD2
GPIO_GI[4]/CP_UART2_CTS_N C16
GPIO_GI[5]/CP_UART2_DTR_N B16
GPIO_GI[6] A16
GPIO_GI[7] E15
GPIO_GI[8] C15
GPIO_GI[9]/UIM_IO A14 UIM_IO
GPIO_GI[10]/UIM_CLK_OUT E13 UIM_CLK
GPIO_GI[11]/UIM_DET_IN C13
GPIO_GI[12]/UIM_PWR_OUT B13
GPIO_GI[13]/CP_UART0_CTS_N A13
GPIO_GI[14]/CP_UART0_DTR_N D13
GPIO_DSPMV[0] C18
GPIO_DSPMV[1] B18
GPIO_DSPMV[2] A19
GPIO_DSPMV[3] C17
DSPM_GPO[0]/UIM_RESETN_OUT E12 UIM_RST_N
DSPM_GPO[1] A11
DSPV_GPO[0] A12
DSPV_GPO[1] C12
TX_ON[0] K16 TX_ON
TX_ON[1] B10
TX_ON[2] C10 PA_R_CELL
TX_ON[3] D10 RF_PWR_ON_TX
TX_ON[4] E10 CELL_PA_ON
RF_ON[0] B11 RF_ON_RX0
RF_ON[1] C11
RF_ON[2] D11
GPO[0]/RF_ON[3] B15 VDD_TXPLL_EN
GPO[1]/RF_ON[4] D15
GPO[2]/RF_ON[5] A15 RF_ON_RX1 (5,6)
GPO[3]/RF_ON[6] B14 RF_PWR_ON_RX
GPO[4]/RF_ON[7] D14
PWR_OFF P3 OSC_EN (4)
OSC_EN T17 CP_PS_HOLD
CP_SCL T14
CP_SDA R14
CP_UART0_IN P4 RXD0
CP_UART0_OUT P5 TXD0
SER_RFCLK D18 SER_RF_CLK
SER_RFDAT D17 SER_RF_DAT
USB_DPS M1 USB_D+
USB_DMN M2 USB_D-
KPD_BL W15
LCD_BL U18
LCD_PWM V19
SH1
SHIELD Frame
GND
PCB1
PCB
SH1-Cover
SHIELD Cover