# FCC – Test Report

Date: 2010-06-30

**No.** 54072-1



# LABORATORY - REPORT

**APPLICANT:** FANHILL LTD.

**ADDRESS:** Flat B, 12/F., So Tao Centre
11-15 Kwai Sau Road,
Kwai Chung, N.T.
Hong Kong

**DATE OF SAMPLE RECEIVED:** 2010-06-14

**DATE OF TESTING:** 2010-06-24 to 2010-06-28

**DESCRIPTION OF SAMPLE:**

| | |
|---|---|
| Product: | Speaker - Outdoor |
| Model number: | CEW020, CEW220, 1626400, 1638176 |
| Product class: | Low Power Communication Device - Transmitter |
| FCC ID number: | YIVCEW020T |
| Rating: | AC/DC Adaptor, Input : AC120V 60Hz, Output : DC9V or DC 9V (AAA size battery x 6) |

**CONDITION OF TEST SAMPLE:** The received sample was under good condition.

**INVESTIGATIONS REQUESTED:** Measurements to the relevant clauses of F.C.C. Rules and Regulations Part 15 Subpart C - Intentional Radiators.

**RESULTS:** See the attached sheets.

**CONCLUSIONS:** From the measurement data obtained, the tested sample was considered to have COMPLIED with the requirements for the relevant clauses of Federal Communications Commission Rules as specified above.

**REMARK:** The model CEW020 was selected as the representative test sample. ModelsCEW220, 1626400 and 1638176 are different from CEW020 on color and / or number of speaker packaged with the transmitter for sale.

INTERNATIONAL ELECTRICAL CERTIFICATION CENTRE LTD. IECC 國際電器認証中心有限公司

Stephen C.N. Wong
Technical Manager

# FCC – Test Report

Date: 2010-06-30

**No.** 54072-1



## TABLE OF CONTENTS

1. Laboratory Report Cover
2. Table of Contents
3. Test Location and Summary of Test Results
4. Test Equipment List
5. Radiated Emission Test Setup
6. Conducted Emission Test Setup
7. Test Procedure
8. Test Results
9-12. Measurement Data
13-14. Photo of sample

# FCC – Test Report

Date: 2010-06-30

No. 54072-1



## Test Location

International Electrical Certification Centre Ltd.
Units 602-605, 31 Lok Yip Road, On Lok Tsuen, Fanling, N.T., Hong Kong
Tel : +852 23052570
Fax : +852 27564480
Email : info@iecc.com.hk

## Summary of Test Results

**Radiated Emission:**

**Test result:** O.K.
**Test data:** See attached data sheet

**Conducted Emission:**

**Test result:** O.K.
**Test data:** See attached data sheet

**Measurement of Emissions within Band Edges**

**Test result:** O.K.
**Test data:** See attached data sheet

# TEST EQUIPMENT LIST

| Equipment | Manufacturer | Model | Serial No. | Last Calibration Date | Next Calibration Date |
|---|---|---|---|---|---|
| Test Receiver | Rohde & Schwarz | ESCS 30 | 100388 | 10/9/2009 | 9/9/2010 |
| Test Receiver | Rohde & Schwarz | ESHS 30 | 839667/002 | 19/5/2010 | 18/5/2011 |
| Artificial Mains Network (LISN) | Schwarzbeck | NSLK 8127 | 8127312 | 11/1/2010 | 10/1/2011 |
| Antenna | Schaffner | CBL6111C | 2791 | 22/07/2008 | 21/7/2010 |
| Antenna Mast System | Schwarzbeck | AM9104 | -- | -- | -- |
| Turntable with Controller | Drehtisch | DT312 | -- | -- | -- |
| Spectrum Analyzer with Q. Peak | Advantest | R3132 | 140101852 | 20/5/2010 | 19/5/2011 |

# FCC – Test Report

No. 54072-1

Date: 2010-06-30



## Radiated Emission Test Setup (3 m diatance) (> 30MHz)

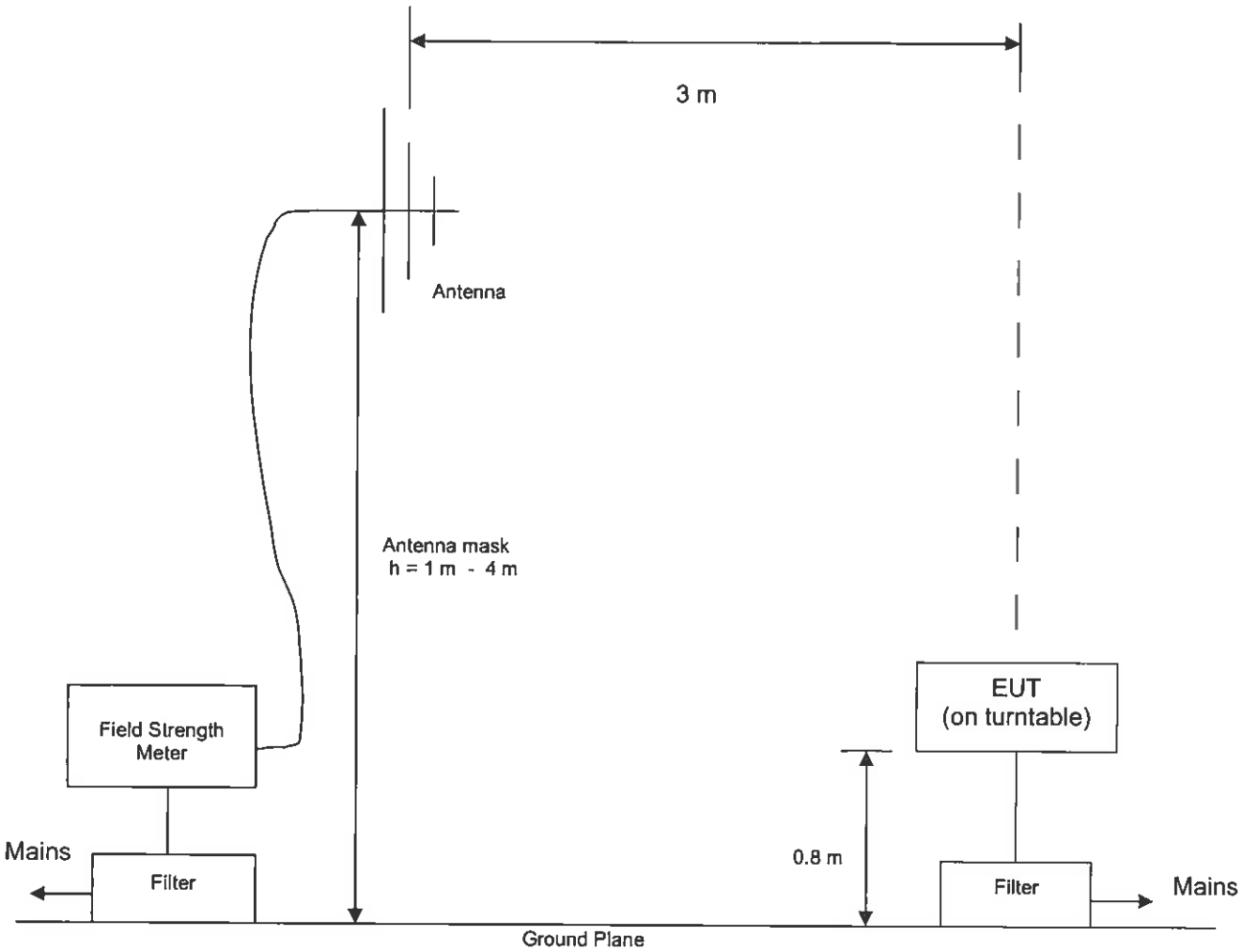

## Conducted Emission Test Setup

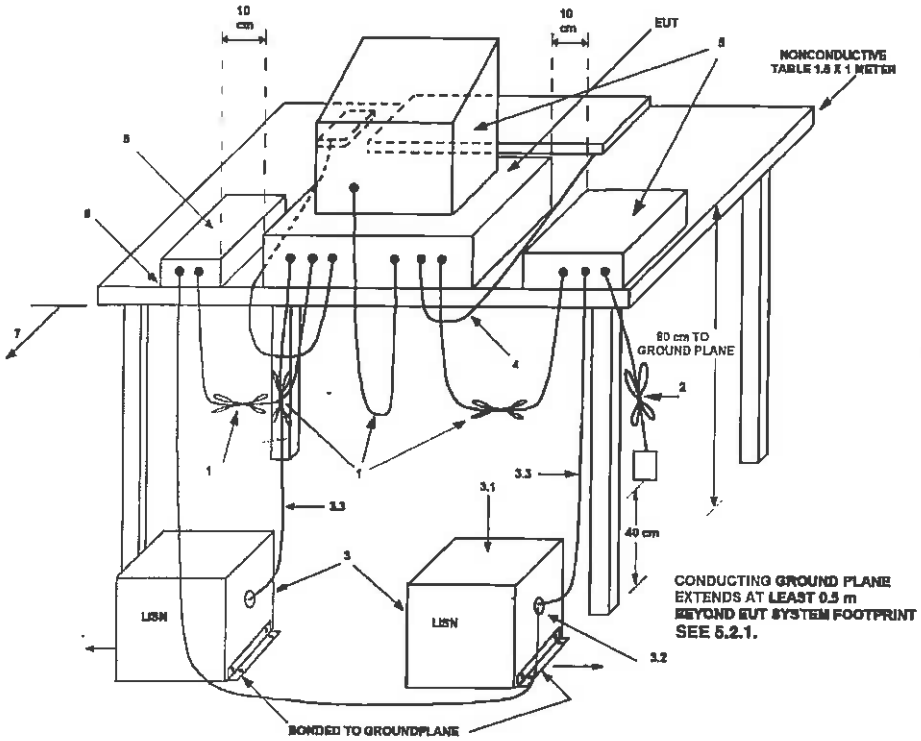


LEGEND:

1) Interconnecting cables that hang closer than 40 cm to the groundplane shall be folded back and forth in the center forming a bundle 30 to 40 cm long (see 6.1.4 and 11.2.4).
2) I/O cables that are not connected to a peripheral shall be bundled in the center. The end of the cable may be terminated, if required, using the correct terminating impedance. The overall length shall not exceed 1 m (see 6.1.4).
3) EUT connected to one LISN. Unused LISN measuring port connectors shall be terminated in 50 Ω. LISN can be placed on top of, or immediately beneath, reference groundplane (see 5.2.3 and 7.2.1).
   3.1) All other equipment powered from additional LISN(s).
   3.2) Multiple outlet strip can be used for multiple power cords of non-EUT equipment.
   3.3) LISN at least 80 cm from nearest part of EUT chassis.
4) Cables of hand-operated devices, such as keyboards, mice, etc., shall be placed as for normal use (See 6.2.1.3 and 11.2.4).
5) Non-EUT components of EUT system being tested (see also Figure 13).
6) Rear of EUT, including peripherals, shall all be aligned and flush with rear of tabletop (see 6.2.1.1 and 6.2.1.2).
7) Rear of tabletop shall be 40 cm removed from a vertical conducting plane that is bonded to the groundplane (see 5.2.2 for options).

# Test Procedure

## Radiated Emission :

The EUT was tested according to ANSI 63.4-2003 for the requirements of FCC Part 15 Subpart C Section 15.209 and 15.235.

During the test, the sample was placed on a turn table and operated with supply at rated AC voltage (i.e AC120V 60Hz) to the host adaptor. The table is 0.8 meter above the reference ground plane on the Open Aera Test Site and can rotate 360 degrees to determine the position of the maximum emission level. A broad-band antenna for the frequency range 30 - 1000 MHz, connected with 10 meters coaxial cable to the test receiver was used for measurement. The antenna is capable of measuring both horizontal and vertical polarizations. The antenna was raised from 1 to 4 meters to find out the maximum emission level from the EUT.

During the test, a reference MP3 player was connected to the input terminal of the sample and was playing a MP3 song at maximum volume. The signal was transmitted via the test sample with the telescopic antenna of the sample fully extended.

An initial pre-scan was performed to find out the maximum emission level of the sample placed at 3 orthogonal planes. Final measurement (30 MHz –1000 MHz) was then performed to record the data for the emissions under worst-case condition for combination of the antenna orientation / height and turn table position.

Note : The Open Aera Test Site located at IECC was placed on file with the FCC Pursuant to Section 2.948 of the FCC Rules (FCC Registration No. : 97774).

## Conducted Emission :

The EUT was tested according to ANSI 63.4-2003 for the requirements of FCC Part 15 Subpart C Section 15.207.

During the test, the sample was placed on a wooden table and operated under different modes with supply at rated AC voltage (i.e AC120V 60Hz) via the LISN to the host adaptor. The table is 0.8 meter above the floor. A reference MP3 player was connected to the input terminal of the sample and was playing a MP3 song at maximum volume. The signal was transmitted via the test sample with the telescopic antenna of the sample fully extended. The LISN was connected to the test receiver for conducted emission measurement (150kHz – 30MHz).

# FCC – Test Report

Date: 2010-06-30

**No.** 54072-1



# Test Results

**Radiated Emission** :

| | |
|---|---|
| Test Requirement: | FCC Part 15 Subpart C Section 15.209 and 15.235 |
| Test Method: | ANSI C63.4 : 2003 |
| Deviations from Standard Test Method: | Nil |
| Frequency Range: | 30MHz – 1000MHz |
| Measurement Distance: | 3 m |
| Detector: | Peak / Average (for fundamental frequency)<br>Quasi-Peak (for frequencies outside the operation band) |

Refer to page 9 for measurement data.

**Conducted Emission** :

| | |
|---|---|
| Test Requirement: | FCC Part 15 Subpart C Section 15.207 |
| Test Method: | ANSI C63.4 : 2003 |
| Deviations from Standard Test Method: | Nil |
| Frequency Range: | 150kHz – 30MHz |
| Detector: | Quasi-Peak / Average |

Refer to page 10 - 11 for measurement data.

# Interference Radiation

Date : 2010-06-30

Measurement of Radiated Emissions
Acc: FCC Part 15 Subpart C (15.235 & 15.209)



**IECC Ref:** 54072-1
**Model:** CEW020
**Applicant:** FANHILL LTD.

**Ser.Nr.:** --

**Set under test:** Wireless Speaker (Tx unit)
**Connected sets:** -
**Operating mode:** Operated with an audio signal from a host MP3 player (maximum volume)

Test Equipment
Receiver: Rohde & Schwarz ESCS 30
Antenna: Schaffner CBL6111C

| | Frequency (MHz) | Horz. Reading dB(μV) | Vert. Reading dB(μV) | Corr. Factor (dB) | Horiz. Test Result dB(μV/m) | Vert. Test Result dB(μV/m) | Limit dB(μV/m) |
|---|---|---|---|---|---|---|---|
| Peak | 49.86 | 34 | 42.8 | 7.8 | 41.8 | 50.6 | 100.0 |
| Av. | 49.86 | 33 | 41 | 7.8 | 40.8 | 48.8 | 80.0 |
| | 30 | < 16 | < 16 | 9.5 | < 25.5 | < 25.5 | 43.5 |
| | 100 | < 16 | < 16 | 11.5 | < 27.5 | < 27.5 | 43.5 |
| | 159 | < 16 | < 16 | 8.7 | < 24.7 | < 24.7 | 43.5 |
| | 300 | < 16 | < 16 | 13.5 | < 29.5 | < 29.5 | 46.0 |
| | 450 | < 16 | < 16 | 14.2 | < 30.2 | < 30.2 | 46.0 |
| | 600 | < 16 | < 16 | 15.2 | < 31.2 | < 31.2 | 46.0 |
| | 650.6 | 22.2 | 18 | 16.6 | 38.8 | 34.6 | 46.0 |
| | 751.1 | < 16 | < 16 | 18.4 | < 34.4 | < 34.4 | 46.0 |
| | 850.8 | 19 | < 16 | 18.9 | 37.9 | < 34.9 | 46.0 |
| | 1000 | < 16 | < 16 | 20.6 | < 36.6 | < 36.6 | 46.0 |

Note : 1. Unless otherwise indicated, the recorded readings are in quasi-peak values.
2. The above results were the worst case results with the sample positioned in all 3 axis during the test. The worst case data were recorded with the sample placed normally on the table and with the antenna fully extended for measurement.
3. Due to the transmitted signal is not in pulse waveform, the average value of the radiation at the fundamental frequency is recorded by direct measurement. Calculation from time domain plots is not applicable.

Operator : KT

# U 5/6

Interference voltage 150kHz – 30MHz
Acc. FCC Part 15 Subpart C Section 15.207

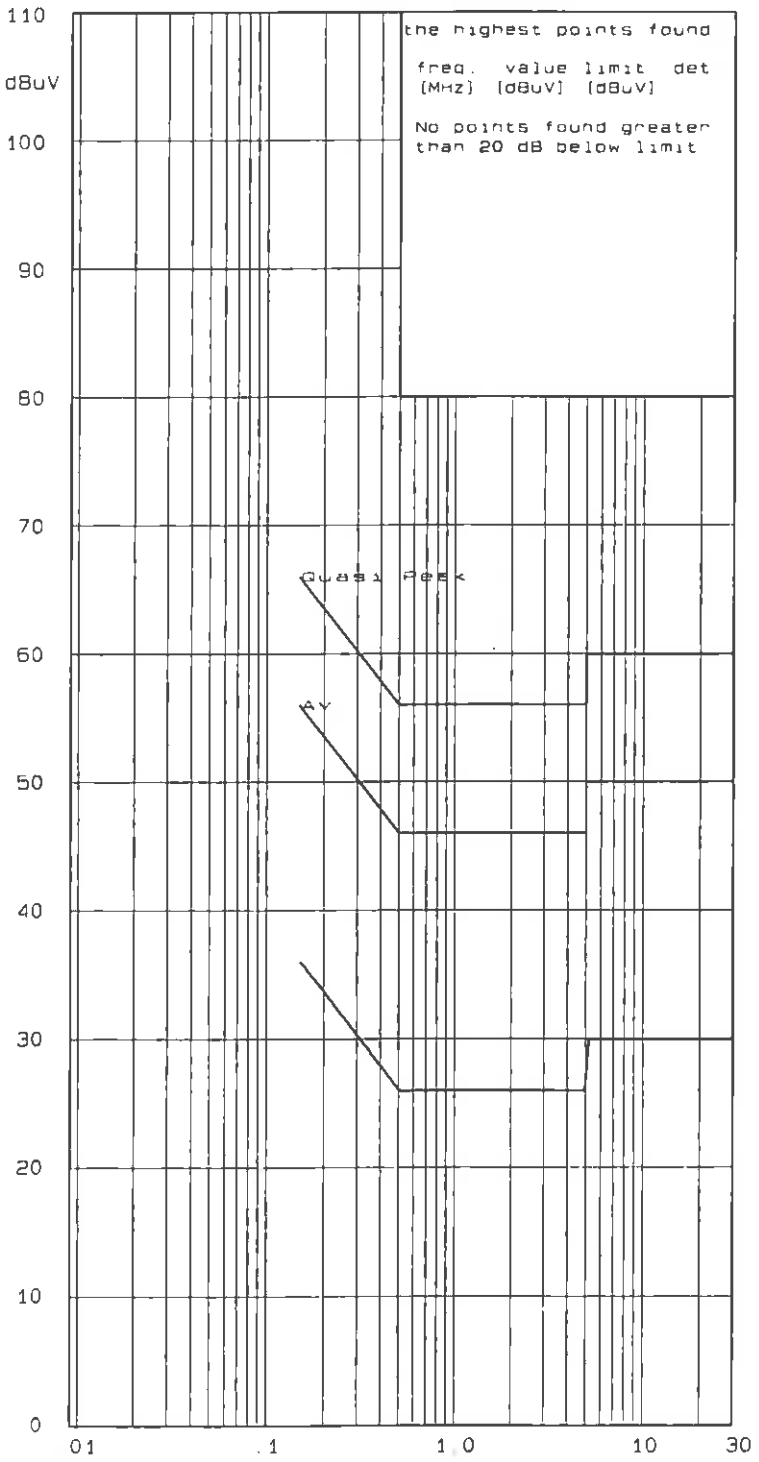


Ref.-No.: 54072

Product : WIRELESS SPEAKER

Sample : 02

Date : 24 Jun 2010

Test equipment:

Rohde & Schwarz ESHS30

Schwarzbeck NSLK8127

Connected sets:

--

Operating mode:

OPERATE W/ AN AUDIO SIGNAL
FROM A HOST MP3 PLAYER
(L)
TX UNIT

RFI suppression parts:

--

* two dB safety margin for
type approval necessary

Operator: KT

Result : pass [X] fail [ ]

IECC

V1 3 5

# U 5/6

Interference voltage 150kHz – 30MHz
Acc. FCC Part 15 Subpart C Section 15.207

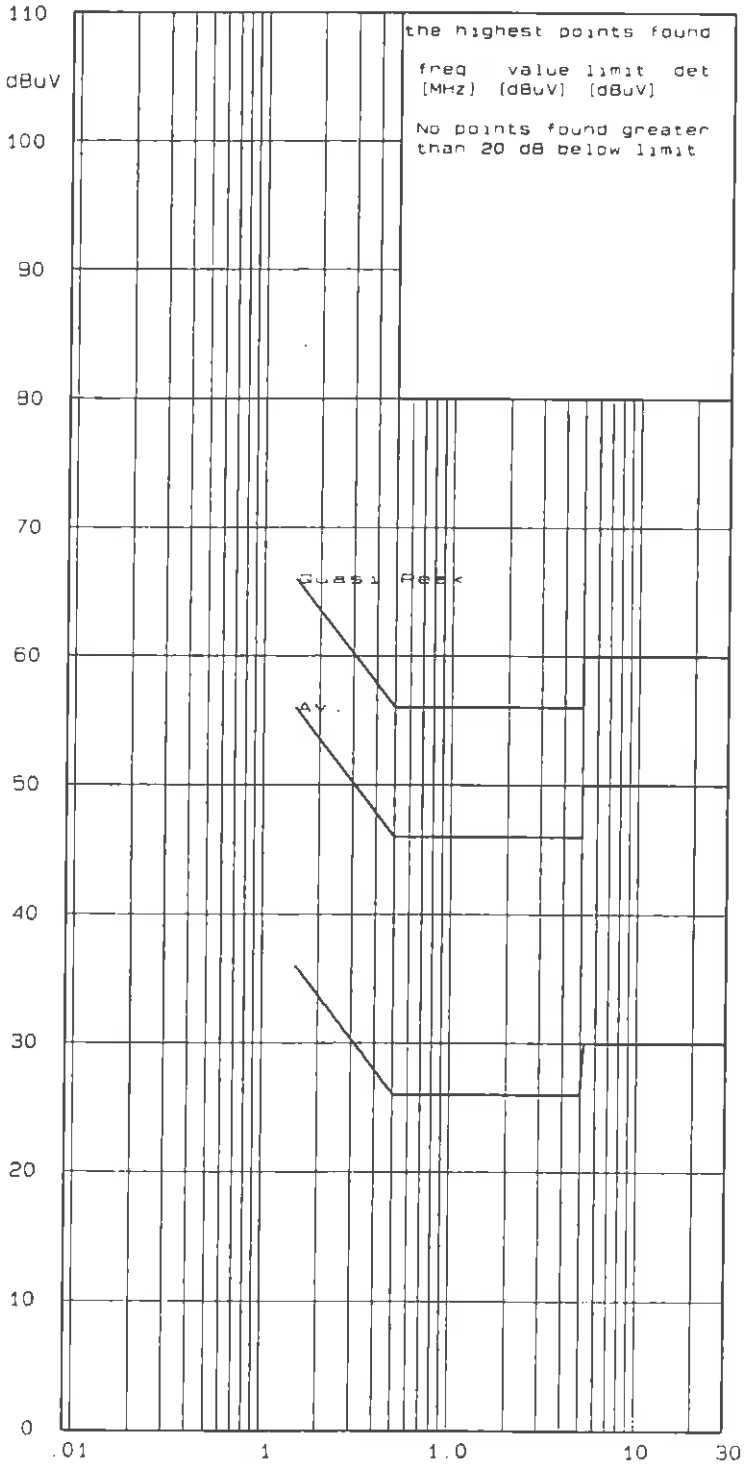


Ref.-No.: 54072

Product : WIRELESS SPEAKER

Sample : 02

Date : 24 Jun 2010

Test equipment:

Rohde & Schwarz ESHS30

Schwarzbeck NSLK8127

Connected sets:

--

Operating mode:

OPERATE W/ AN AUDIO SIGNAL
FROM A HOST MP3 PLAYER
(N)
TX UNIT

RFI suppression parts:
--

* two dB safety margin for
type approval necessary

Operator: KT

Result : pass [X] fail [ ]

IECC

# Measurement Data of Emissions within Band Edges

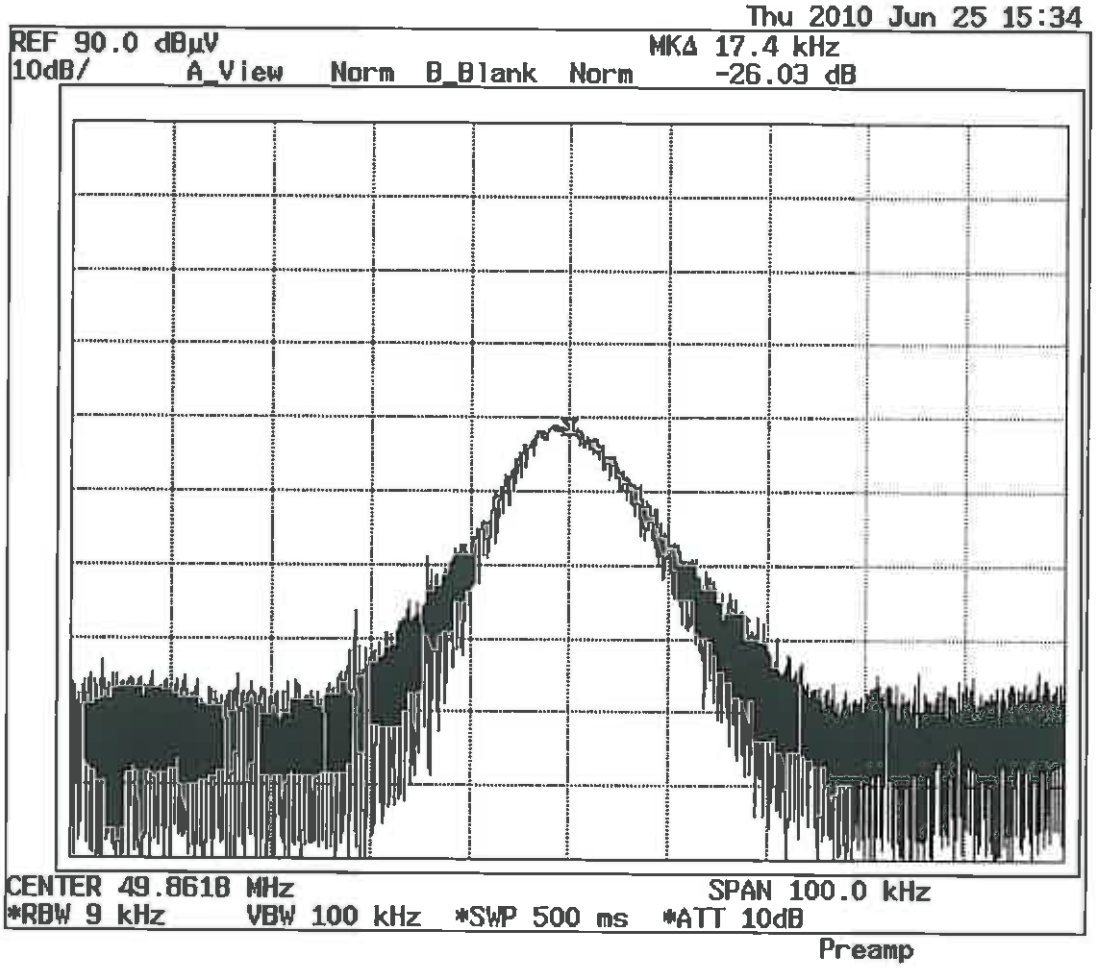


Result : The field strength of any emission within the operation band did not exceed 80 dB(µV/m) for average value or 100 dB(µV/m) for peak value. Refer to page 9 for the recorded value for the emission at the fundamental frequency.

# FCC – Test Report

No. 54072-1

Date: 2010-06-30



## Photo of Sample

White colour sample

# FCC – Test Report

Date: 2010-06-30

**No.** 54072-1

Black colour sample

Address 地址 Units 602-605, 6/F., 31 Lok Yip Rd., On Lok Tsuen, Fanling, N.T., Hong Kong
香港新界粉嶺安樂村樂業路31號6樓602-605室
China 中國 Address 地址 IECC (Guangzhou) Services Co., Ltd. 廣州時立達技術服務有限公司
Flat A, 2/F., Block 3, 56 Shuiyin Road, Guangzhou, P.R. of China
廣州市水銀路56號3棟2A室 Postcode 郵政編號 510075
Tel 電話 (852) 2305 2570
Fax 傳真 (852) 2756 4480
E-mail 電子郵件 info@iecc.com.hk
Home Page 網頁 http://www.iecc.com.hk
Tel 電話 (86-20) 8768 4838
Fax 傳真 (86-20) 8768 3918
E-mail 電子郵件 info@iecc.net.cn
Home Page 網頁 http://www.iecc.net.cn