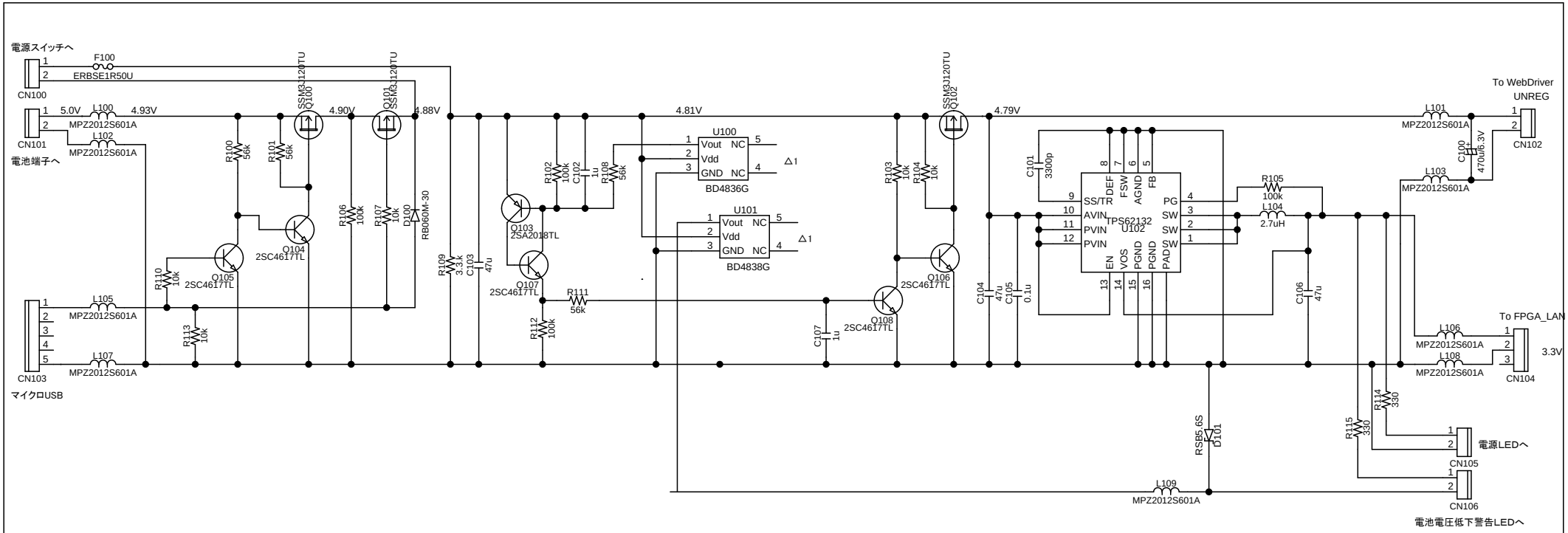

Edit.	Date	Design	Check	Appr.	Description
	2015.09.11	t-ichii			U100,U101変更
	2015.07.14	t-ichii			全面変更

Design	T-ichii		Check	Uneoka		Appr.	Yamamoto

TITLE
VT-200RGB_PowerP.C.B

DRAW. No.

Scalar corporation

SHEET /