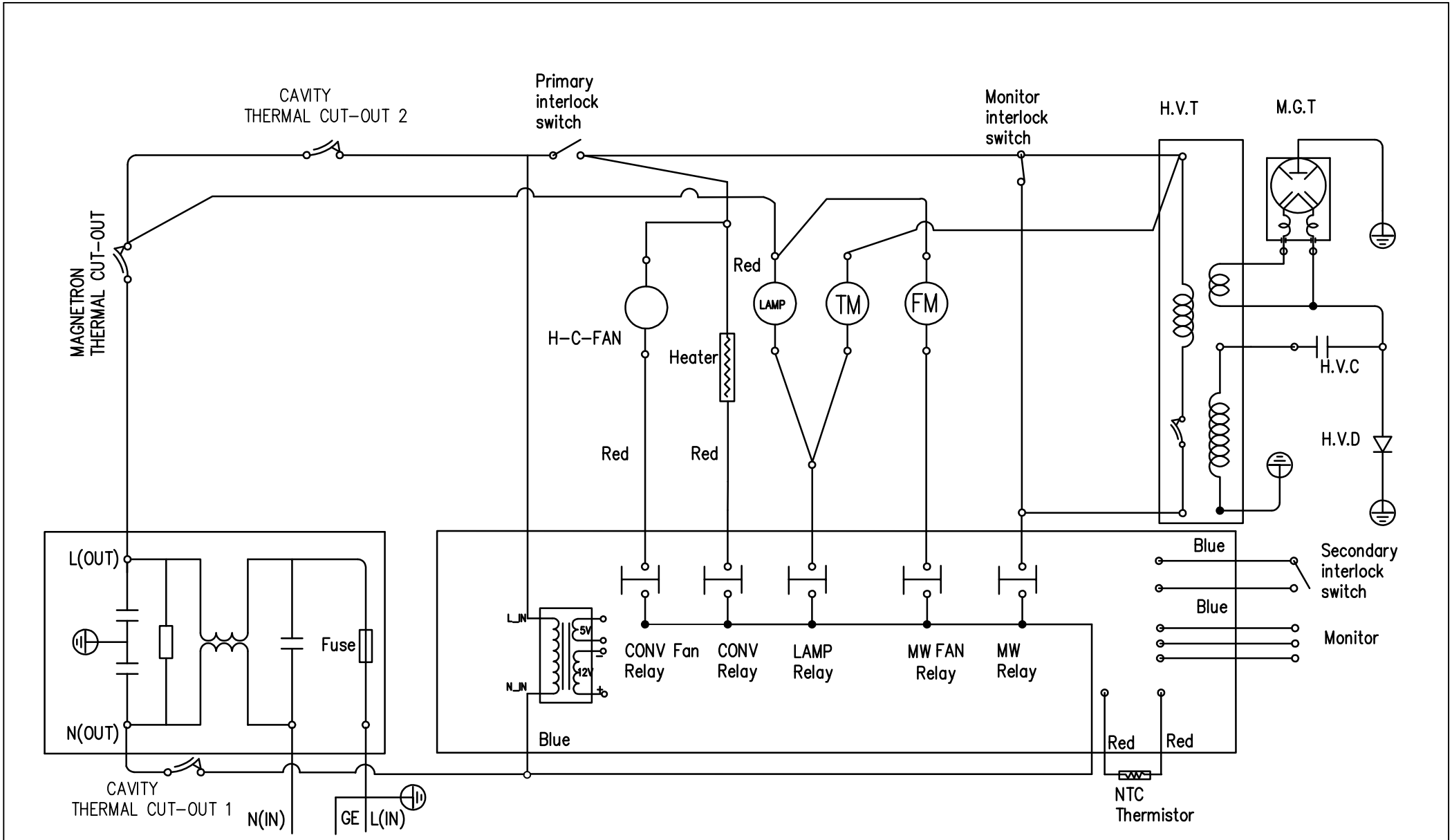
CAVITY
THERMAL CUT-OUT 2
Primary
interlock
switch
Monitor
interlock
switch
H.V.T
M.G.T
MAGNETRON
THERMAL CUT-OUT
Red
LAMP
TM
FM
H-C-FAN
Heater
H.V.C
H.V.D
Red
Red
Blue
Secondary
interlock
switch
Blue
Monitor
L(OUT)
Fuse
N(OUT)
L_IN
N_IN
5V
12V
CONV Fan
Relay
CONV
Relay
LAMP
Relay
MW FAN
Relay
MW
Relay
Blue
Red
Red
NTC
Thermistor
CAVITY
THERMAL CUT-OUT 1
N(IN)
GE
L(IN)

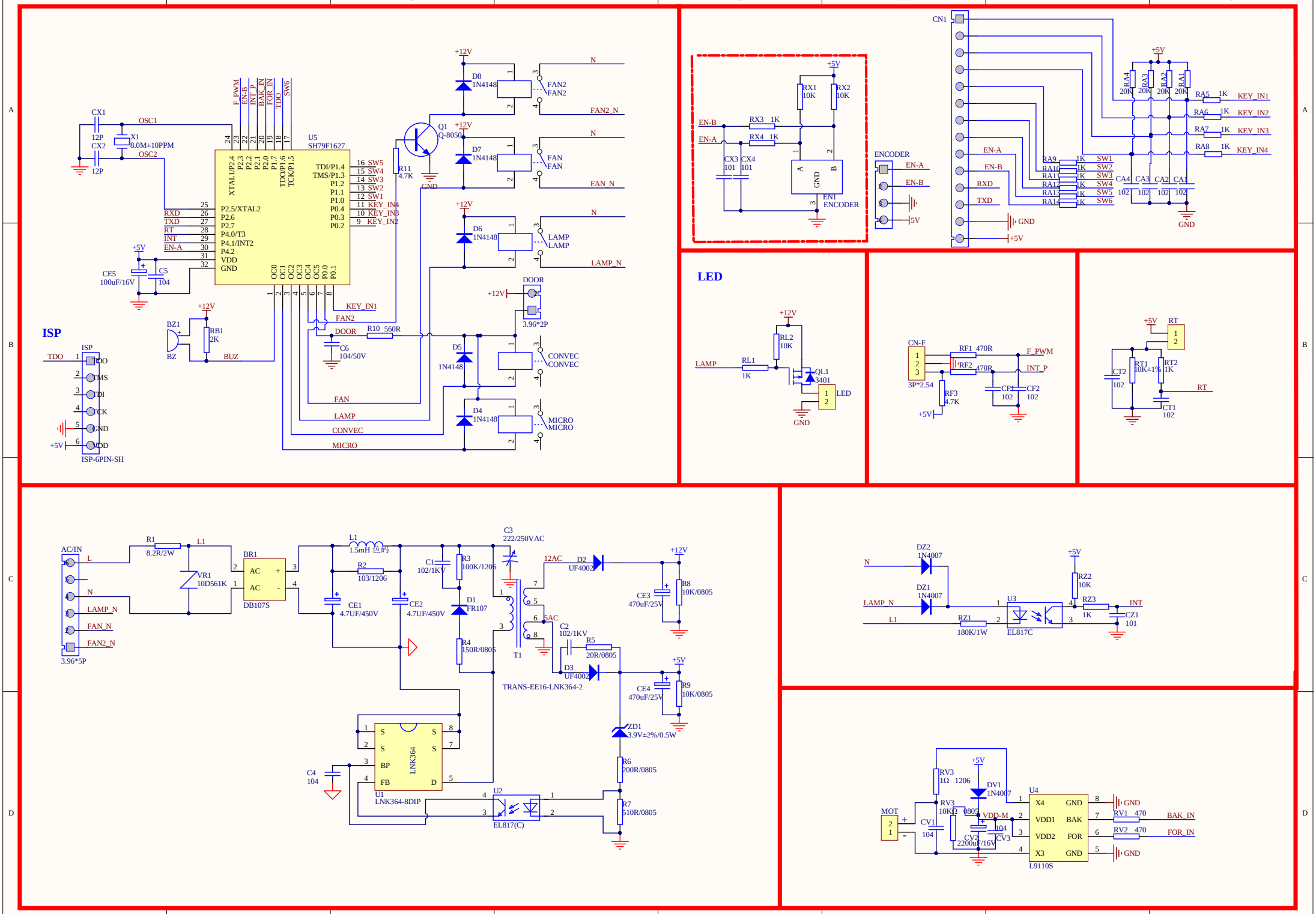
ISP
U5
SH79F1627
XTAL1/P2.4
P2.3
P2.2
P2.1
P2.0
P1.7
TDO/P1.6
TCK/P1.5
TDI/P1.4
TMS/P1.3
P1.2
P1.1
P1.0
P0.4
P0.3
P0.2
P2.5/XTAL2
P2.6
P2.7
P4.0/T3
P4.1/INT2
P4.2
VDD
GND
OC0
OC1
OC2
OC3
OC4
OC5
P0.0
P0.1
F_PWM
EN-B
INT_P
BAK_IN
FOR_IN
TDO
SW6
CX1
12P
CX2
12P
X1
8.0M±10PPM
OSC1
OSC2
CE5
100uF/16V
C5
104
+5V
BZ1
BZ
RB1
2K
BUZ
+12V
RXD
TXD
RT
INT
EN-A
KEY_IN1
FAN2
DOOR
R10 560R
C6
104/50V
FAN
LAMP
CONVEC
MICRO
R11
4.7K
GND
Q1
Q-8050
D8
1N4148
D7
1N4148
D6
1N4148
D5
1N4148
D4
1N4148
FAN2
FAN2
FAN
FAN
LAMP
LAMP
CONVEC
CONVEC
MICRO
MICRO
N
FAN2_N
FAN_N
LAMP_N
DOOR
3.96*2P
ISP
TDO
TMS
TDI
TCK
GND
VDD
ISP-6PIN-SH
AC/IN
L
N
LAMP_N
FAN_N
FAN2_N
3.96*5P
R1
8.2R/2W
L1
VR1
10D561K
BR1
AC
AC
DB107S
L1
1.5mH
R2
103/1206
CE1
4.7UF/450V
CE2
4.7UF/450V
C1
102/1KV
R3
100K/1206
D1
FR107
R4
150R/0805
C3
222/250VAC
12AC
5AC
T1
TRANS-EE16-LNK364-2
D2
UF4002
D3
UF4002
C2
102/1KV
R5
20R/0805
CE3
470uF/25V
CE4
470uF/25V
R8
10K/0805
R9
10K/0805
ZD1
3.9V±2%/0.5W
R6
200R/0805
R7
510R/0805
U1
LNK364-8DIP
LNK364
S
S
BP
FB
S
S
D
C4
104
U2
EL817(C)
ENCODER
EN-A
EN-B
5V
RX1
10K
RX2
10K
RX3 1K
RX4 1K
CX3
101
CX4
101
EN1
ENCODER
CN1
RA4
20K
RA3
20K
RA2
20K
RA1
20K
RA5 1K
RA6 1K
RA7 1K
RA8 1K
KEY_IN1
KEY_IN2
KEY_IN3
KEY_IN4
RA9
RA10
RA11
RA12
RA13
RA14
SW1
SW2
SW3
SW4
SW5
SW6
CA4
CA3
CA2
CA1
102
RXD
TXD
LED
RL2
10K
RL1
1K
QL1
3401
CN-F
3P*2.54
RF1 470R
RF2 470R
F_PWM
INT_P
RF3
4.7K
CF1
102
CF2
102
RT
RT1
10K±1%
RT2
1K
CT2
102
CT1
102
DZ2
1N4007
DZ1
1N4007
RZ1
180K/1W
U3
EL817C
RZ2
10K
RZ3
1K
CZ1
101
INT
MOT
RV3
1Ω 1206
DV1
1N4007
RV3
10KΩ 0805
CV1
104
CV2
2200uF/16V
CV3
104
VDD-M
U4
X4
VDD1
VDD2
X3
GND
BAK
FOR
GND
RV1 470
RV2 470
BAK_IN
FOR_IN
L9110S

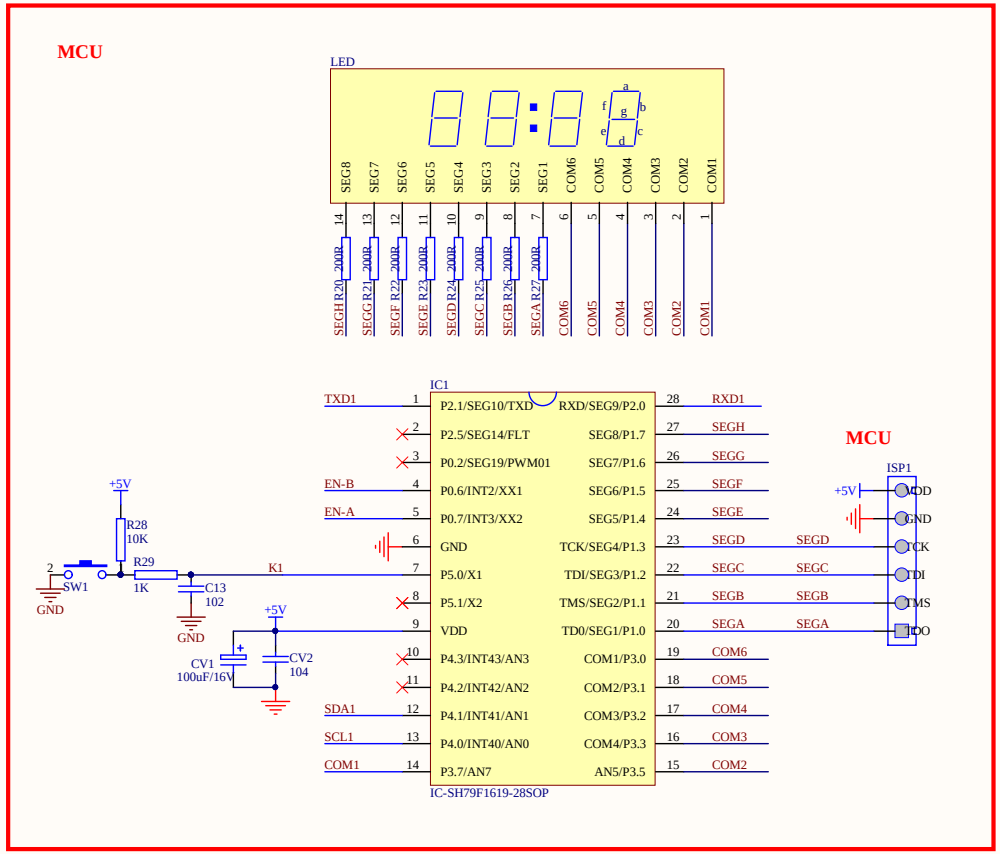
MCU
LED
SEG8 SEG7 SEG6 SEG5 SEG4 SEG3 SEG2 SEG1 COM6 COM5 COM4 COM3 COM2 COM1
SEGH R20 200R
SEGG R21 200R
SEGF R22 200R
SEGE R23 200R
SEGD R24 200R
SEGC R25 200R
SEGB R26 200R
SEGA R27 200R
IC1
P2.1/SEG10/TXD
P2.5/SEG14/FLT
P0.2/SEG19/PWM01
P0.6/INT2/XX1
P0.7/INT3/XX2
GND
P5.0/X1
P5.1/X2
VDD
P4.3/INT43/AN3
P4.2/INT42/AN2
P4.1/INT41/AN1
P4.0/INT40/AN0
P3.7/AN7
RXD/SEG9/P2.0
SEG8/P1.7
SEG7/P1.6
SEG6/P1.5
SEG5/P1.4
TCK/SEG4/P1.3
TDI/SEG3/P1.2
TMS/SEG2/P1.1
TD0/SEG1/P1.0
COM1/P3.0
COM2/P3.1
COM3/P3.2
COM4/P3.3
AN5/P3.5
IC-SH79F1619-28SOP
TXD1
EN-B
EN-A
SDA1
SCL1
COM1
RXD1
SEGH
SEGG
SEGF
SEGE
SEGD
SEGC
SEGB
SEGA
COM6
COM5
COM4
COM3
COM2
MCU
ISP1
VDD
GND
TCK
TDI
TMS
TDO
+5V
R28 10K
R29 1K
SW1
C13 102
K1
CV1 100uF/16V
CV2 104

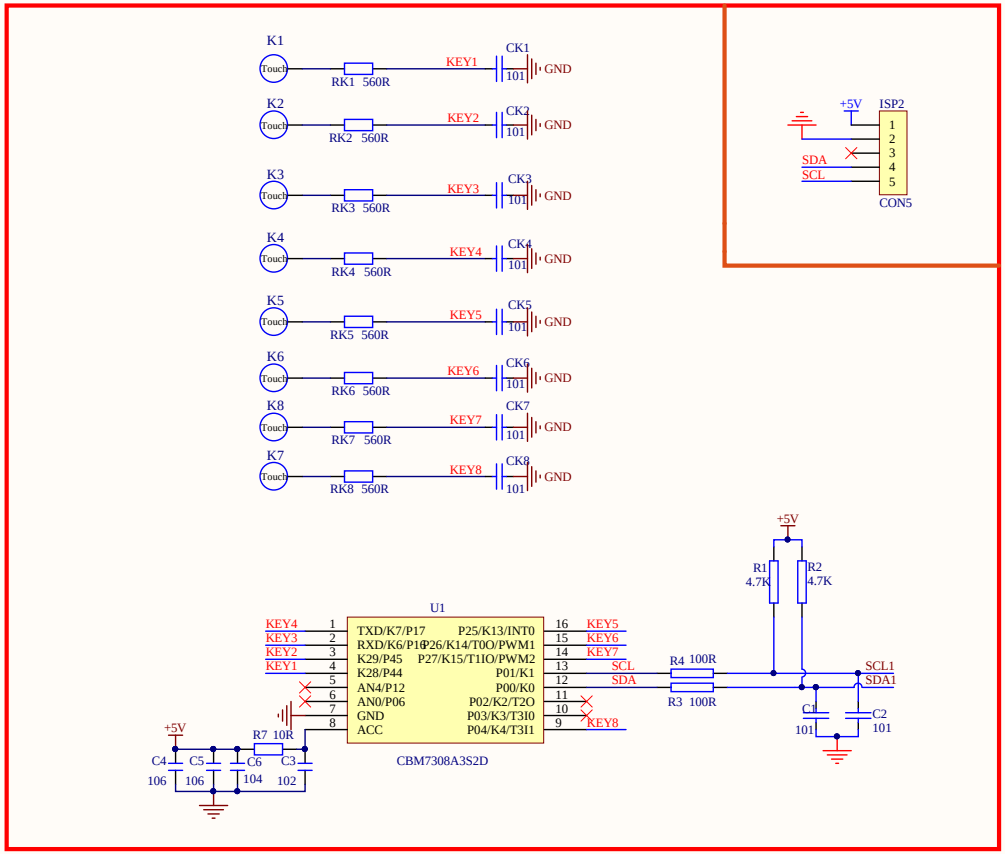
K1 K2 K3 K4 K5 K6 K8 K7
Touch
RK1 560R
RK2 560R
RK3 560R
RK4 560R
RK5 560R
RK6 560R
RK7 560R
RK8 560R
KEY1 KEY2 KEY3 KEY4 KEY5 KEY6 KEY7 KEY8
CK1 CK2 CK3 CK4 CK5 CK6 CK7 CK8
101
GND
ISP2
CON5
SDA
SCL
U1
TXD/K7/P17
RXD/K6/P16
K29/P45
K28/P44
AN4/P12
AN0/P06
GND
ACC
P25/K13/INT0
P26/K14/T0O/PWM1
P27/K15/T1IO/PWM2
P01/K1
P00/K0
P02/K2/T2O
P03/K3/T3I0
P04/K4/T3I1
CBM7308A3S2D
R7 10R
C4 106
C5 106
C6 104
C3 102
R4 100R
R3 100R
R1 4.7K
R2 4.7K
C1 101
C2 101
SCL1
SDA1
+5V

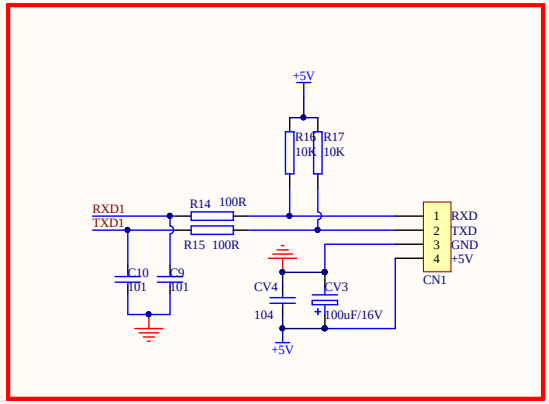
+5V
R16 10K
R17 10K
RXD1
TXD1
R14 100R
R15 100R
C10 101
C9 101
CV4 104
CV3 100uF/16V
RXD
TXD
GND
+5V
CN1

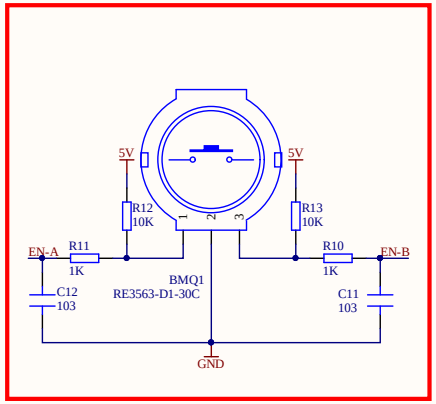
5V
R12 10K
R13 10K
EN-A
R11 1K
R10 1K
EN-B
C12 103
C11 103
BMQ1
RE3563-D1-30C
GND