FCC Test Report

APPLICANT	:	BLU Products, Inc.
EQUIPMENT	:	Mobile Phone
BRAND NAME	:	BLU
MODEL NAME	:	STUDIO XL LTE
MARKETING NAME	:	STUDIO XL LTE
FCC ID	:	YHLBLUSTXLLTE
STANDARD	:	FCC 47 CFR FCC Part 15 Subpart B
CLASSIFICATION	:	Certification

The product was received on Apr. 29, 2016 and testing was completed on Jun. 08, 2016. We, SPORTON INTERNATIONAL (SHENZHEN) INC., would like to declare that the tested sample has been evaluated in accordance with the test procedures given in ANSI C63.4-2014 and has been in compliance with the applicable technical standards.

The test results in this report apply exclusively to the tested model / sample. Without written approval of SPORTON INTERNATIONAL (SHENZHEN) INC., the test report shall not be reproduced except in full.

Prepared by: Ken Chen / Manager

Approved by: Jones Tsai / Manager

Testing Laboratory
2353

SPORTON INTERNATIONAL (SHENZHEN) INC.
1F & 2F, Building A, Morning Business Center, No. 4003 ShiGu Rd., Xili Town, Nanshan District, Shenzhen, Guangdong, P. R. China

TABLE OF CONTENTS

REVISION HISTORY **3**

SUMMARY OF TEST RESULT **4**

1. GENERAL DESCRIPTION **5**

1.1. Applicant 5
1.2. Manufacturer 5
1.3. Product Feature of Equipment Under Test 5
1.4. Product Specification of Equipment Under Test 6
1.5. Modification of EUT 7
1.6. Test Location 7
1.7. Applicable Standards 7

2. TEST CONFIGURATION OF EQUIPMENT UNDER TEST **8**

2.1. Test Mode 8
2.2. Connection Diagram of Test System 10
2.3. Support Unit used in test configuration and system 12
2.4. EUT Operation Test Setup 13

3. TEST RESULT **14**

3.1. Test of AC Conducted Emission Measurement 14
3.2. Test of Radiated Emission Measurement 20

4. LIST OF MEASURING EQUIPMENT **24**

5. UNCERTAINTY OF EVALUATION **25**

APPENDIX A. SETUP PHOTOGRAPHS

REVISION HISTORY

REPORT NO.	VERSION	DESCRIPTION	ISSUED DATE
FC642902	Rev. 01	Initial issue of report	Jul. 11, 2016

SUMMARY OF TEST RESULT

Report Section	FCC Rule	IC Rule	Description	Limit	Result	Remark
3.1	15.107	ICES003 Section 6.1	AC Conducted Emission	< 15.107 limits < ICES003 6.1 limits	PASS	Under limit 10.27 dB at 0.480 MHz
3.2	15.109	ICES003 Section 6.2	Radiated Emission	< 15.109 limits < ICES003 6.2 limits	PASS	Under limit 3.20 dB at 59.970 MHz

1. General Description

1.1. Applicant

BLU Products, Inc.
10814 NW 33rd St # 100 Doral, FL 33172

1.2. Manufacturer

BLU Products, Inc.
10814 NW 33rd St # 100 Doral, FL 33172

1.3. Product Feature of Equipment Under Test

Product Feature	
Equipment	Mobile Phone
Brand Name	BLU
Model Name	STUDIO XL LTE
Marketing Name	STUDIO XL LTE
FCC ID	YHLBLUSTXLLTE
EUT supports Radios application	GSM/GPRS/EGPRS/WCDMA/HSPA/ HSPA+(16QAM uplink is not supported)/LTE/ WLAN 2.4GHz 802.11b/g/n HT20/ Bluetooth v3.0 + EDR/Bluetooth v4.0 LE
IMEI Code	Conduction: 866689029996223/866689029997874 Radiation: 866689029996207/866689029997858
HW Version	SL1805P_MB_PCB_V1.0
SW Version	BLU_ZSL1805P_V04_GENERIC
EUT Stage	Production Unit

Remark: The above EUT's information was declared by manufacturer. Please refer to the specifications or user's manual for more detailed description.

1.4. Product Specification of Equipment Under Test

Standards-related Product Specification	
Tx Frequency	GSM850: 824.2 MHz ~ 848.8 MHz GSM1900: 1850.2 MHz ~ 1909.8MHz WCDMA Band V: 826.4 MHz ~ 846.6 MHz WCDMA Band IV : 1712.4 MHz ~ 1752.6 MHz WCDMA Band II: 1852.4 MHz ~ 1907.6 MHz LTE Band 2 : 1850.7 MHz ~ 1909.3 MHz LTE Band 4 : 1710.7 MHz ~ 1754.3 MHz LTE Band 7 : 2502.5 MHz ~ 2567.5 MHz LTE Band 12 : 699.7 MHz ~ 715.3 MHz LTE Band 17 : 706.5 MHz ~ 713.5 MHz 802.11b/g/n: 2412 MHz ~ 2462 MHz Bluetooth: 2402 MHz ~ 2480 MHz
Rx Frequency	GSM850: 869.2 MHz ~ 893.8 MHz GSM1900: 1930.2 MHz ~ 1989.8 MHz WCDMA Band V: 871.4 MHz ~ 891.6 MHz WCDMA Band IV : 2112.4 MHz ~ 2152.6 MHz WCDMA Band II: 1932.4 MHz ~ 1987.6 MHz LTE Band 2 : 1930.7 MHz ~ 1989.3 MHz LTE Band 4 : 2110.7 MHz ~ 2154.3 MHz LTE Band 7 : 2622.5 MHz~ 2687.5 MHz LTE Band 12 : 729.7 MHz ~ 745.3 MHz LTE Band 17 : 736.5 MHz ~ 743.5 MHz 802.11b/g/n: 2412 MHz ~ 2462 MHz Bluetooth: 2402 MHz ~ 2480 MHz GPS : 1.57542 GHz Glonass: 1602 MHz + n× 0.5625MHz (n=−7,−6,−5,...0,...,6) FM: 88 MHz ~ 108 MHz
Antenna Type	WWAN : PIFA Antenna WLAN : PIFA Antenna Bluetooth : PIFA Antenna GPS/ Glonass : PIFA Antenna
Type of Modulation	GSM: GMSK GPRS: GMSK EDGE(MCS 0-4): GMSK / (MCS 5-9): 8PSK WCDMA: QPSK (Uplink) HSDPA: QPSK (Uplink) HSUPA: QPSK (Uplink) HSPA+ : 16QAM (16QAM uplink is not supported) LTE: QPSK / 16QAM / 64QAM (Downlink Only) 802.11b : DSSS (DBPSK / DQPSK / CCK) 802.11g/n : OFDM (BPSK / QPSK / 16QAM / 64QAM) Bluetooth LE : GFSK Bluetooth (1Mbps) : GFSK Bluetooth (2Mbps) : π/4-DQPSK Bluetooth (3Mbps) : 8-DPSK GPS/Glonass : BPSK FM

1.5. Modification of EUT

No modifications are made to the EUT during all test items.

1.6. Test Location

Test Site	SPORTON INTERNATIONAL (SHENZHEN) INC.	
Test Site Location	1F & 2F, Building A, Morning Business Center, No. 4003 ShiGu Rd., Xili Town, Nanshan District, Shenzhen, Guangdong, P. R. China TEL: +86-755-8637-9589 FAX: +86-755-8637-9595	
Test Site No.	**Sporton Site No.**	
	CO01-SZ	

Test Site	SPORTON INTERNATIONAL (KUNSHAN) INC.	
Test Site Location	No. 3-2, PingXiang Road, Kunshan, Jiangsu Province, P. R. China TEL: +86-0512-5790-0158 FAX: +86-0512-5790-0958	
Test Site No.	**Sporton Site No.**	**FCC/IC Registration No.**
	03CH02-KS	418269/4086E

Note: The test site complies with ANSI C63.4 2014 requirement.

1.7. Applicable Standards

According to the specifications of the manufacturer, the EUT must comply with the requirements of the following standards:

- FCC 47 CFR FCC Part 15 Subpart B
- ANSI C63.4-2014
- IC ICES-003 Issue 6
- IC RSS-Gen Issue 4

Remark: All test items were verified and recorded according to the standards and without any deviation during the test.

2. Test Configuration of Equipment Under Test

2.1. Test Mode

The EUT has been associated with peripherals pursuant to ANSI C63.4-2014 and configuration operated in a manner tended to maximize its emission characteristics in a typical application.

Frequency range investigated: conduction (150 kHz to 30 MHz), radiation (30MHz to the 5th harmonic of the highest fundamental frequency or to 40 GHz, whichever is lower).

The following tables are showing the test modes as the worst cases and recorded in this report.

Item	EUT Configuration	Test Condition		
		EMI AC	EMI RE<1G	EMI RE≥1G
1.	Charging Mode (EUT with adapter)	☒	☒	Note 1
2.	Data application transferred mode (EUT with notebook)	☒	☒	☒

Abbreviations:

- EMI AC: AC conducted emissions
- EMI RE ≥ 1G: EUT radiated emissions ≥ 1GHz
- EMI RE < 1G: EUT radiated emissions < 1GHz

Note 1: Testing for this mode is not required or not the worst case.

Remark: For signal above 1GHz, the worst case was test item 2.

Test Items	EUT Configure Mode	Function Type
AC Conducted Emission	1/2	Mode 1 : GSM850 Idle + Bluetooth Idle + WLAN Idle + USB Cable (Charging from Adapter) + Earphone + Camera(Front) + SIM1 + SD Card<Fig.1> Mode 2 : WCDMA Band II Idle + Bluetooth Idle + WLAN Idle + USB Cable (Charging from Adapter) + Earphone + Camera(Back) + SIM2 + SD Card<Fig.1> Mode 3 : WCDMA Band IV Idle + Bluetooth Idle + WLAN Idle + USB Cable (Charging from Adapter) + Earphone + MPEG4 + SIM1 + SD Card<Fig.1> Mode 4 : LTE Band 2 Idle + Bluetooth Idle + WLAN Idle + USB Cable (Charging from Adapter) + Earphone+ Glonass Rx + SIM1 + SD Card <Fig.2> Mode 5 : LTE Band 4 Idle + Bluetooth Idle + WLAN Idle + USB Cable (Data Link with Notebook) + Earphone + SD Card + GPS Rx + FM Rx + SIM2<Fig.3>
Radiated Emissions < 1GHz	1/2	Mode 1 : GSM850 Idle + Bluetooth Idle + WLAN Idle + USB Cable (Charging from Adapter) + Earphone + Camera(Front) + SIM1 + SD Card<Fig.1> Mode 2 : WCDMA Band II Idle + Bluetooth Idle + WLAN Idle + USB Cable (Charging from Adapter) + Earphone + Camera(Back) + SIM2 + SD Card<Fig.1> Mode 3 : WCDMA Band IV Idle + Bluetooth Idle + WLAN Idle + USB Cable (Charging from Adapter) + Earphone + MPEG4 + SIM1 + SD Card<Fig.1> Mode 4 : LTE Band 2 Idle + Bluetooth Idle + WLAN Idle + USB Cable (Charging from Adapter) + Earphone+ Glonass Rx + SIM1 + SD Card <Fig.2> Mode 5 : LTE Band 4 Idle + Bluetooth Idle + WLAN Idle + USB Cable (Data Link with Notebook) + Earphone + SD Card + GPS Rx + FM Rx + SIM2<Fig.3>
Radiated Emissions ≥ 1GHz	2	Mode 1 : LTE Band 4 Idle + Bluetooth Idle + WLAN Idle + USB Cable (Data Link with Notebook) + Earphone + SD Card + GPS Rx + FM Rx + SIM2<Fig.3>

Remark:

1. The worst case of AC is mode 2; and the USB Link mode of AC is mode 5, only the test data of these modes are reported.
2. The worst case of RE < 1G is mode 5; only the test data of this mode is reported.
3. Data Link with notebook means data application transferred mode between EUT and notebook.

2.2. Connection Diagram of Test System

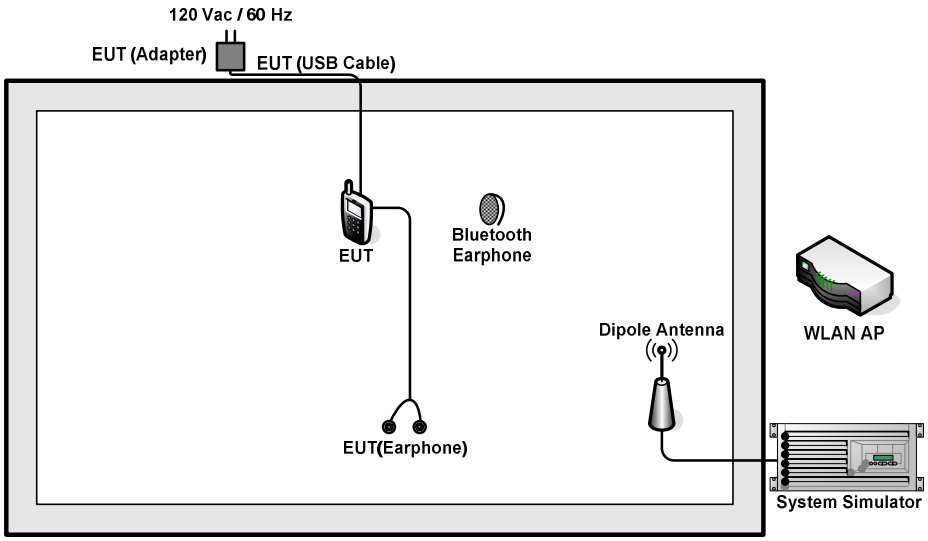

<Fig.1>

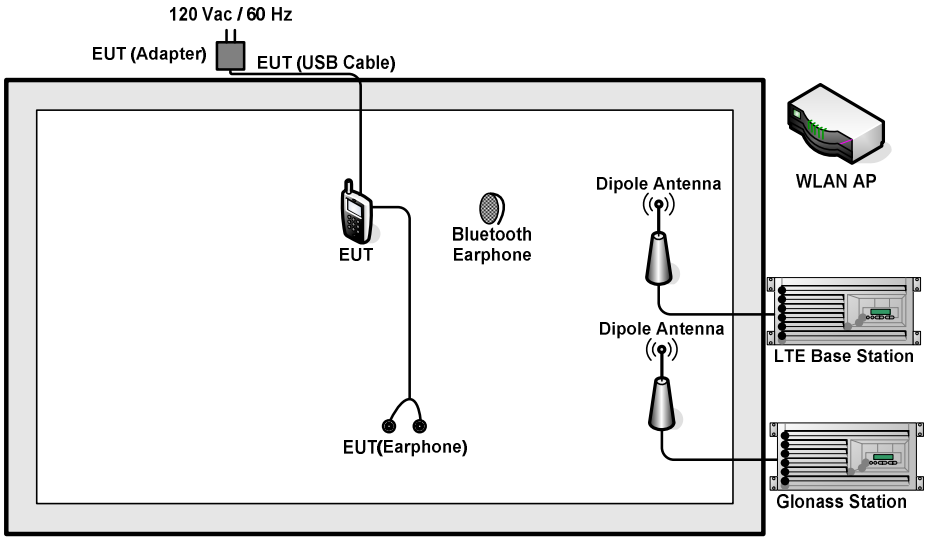

<Fig.2>

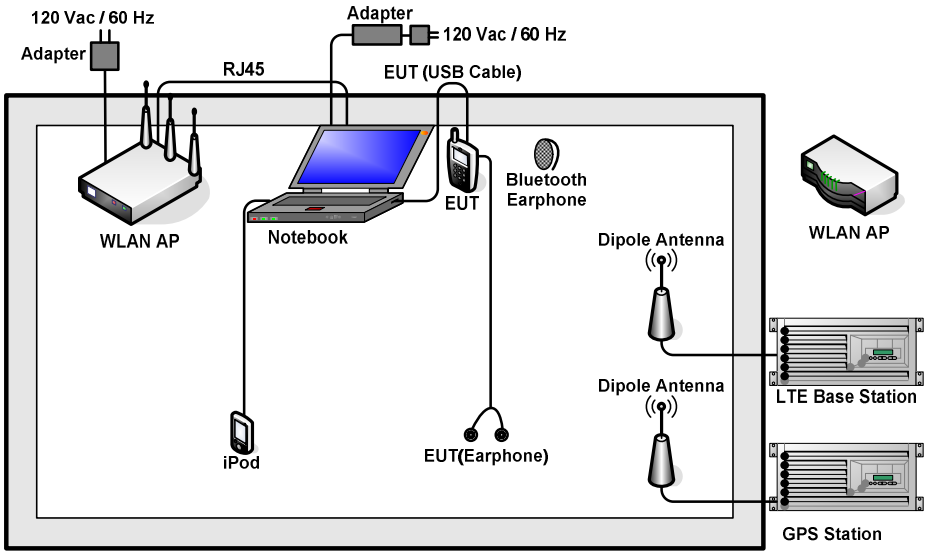
120 Vac / 60 Hz
Adapter
Adapter
120 Vac / 60 Hz
RJ45
EUT (USB Cable)
WLAN AP
Notebook
EUT
Bluetooth
Earphone
Dipole Antenna
WLAN AP
LTE Base Station
Dipole Antenna
iPod
EUT(Earphone)
GPS Station

<Fig.3>

2.3. Support Unit used in test configuration and system

Item	Equipment	Trade Name	Model Name	FCC ID	Data Cable	Power Cord
1.	System Simulator	R&S	CMU 200	N/A	N/A	Unshielded, 1.8 m
2.	LTE Base Station	Anritsu	MT8820C	N/A	N/A	Unshielded, 1.8 m
3.	GPS Station	ADIVIC	MP9000	N/A	N/A	Unshielded, 1.8 m
4.	Glonass Station	RACELOGIC	RLLS03-2P	N/A	N/A	N/A
5.	Glonass Station	RACELOGIC Labsat	38367	N/A	N/A	Unshielded, 1.8 m
6.	WLAN AP	ASUSTek	RT-AC66U	MSQ-RTAC66U	N/A	Unshielded, 2.7 m with Core
7.	WLAN AP	D-link	DIR-855	KA2DIR855A2	N/A	Unshielded, 1.8 m
8.	Bluetooth Earphone	Nokia	BH-108	PYAHS-107W	N/A	N/A
9.	Bluetooth Earphone	Lenovo	LBH301	N/A	N/A	N/A
10.	Notebook	Lenovo	E540	FCC DoC	N/A	AC I/P: Unshielded, 1.2 m DC O/P: Shielded, 1.8 m
11.	Notebook	Dell	Latitude3440	N/A	N/A	AC I/P: Unshielded, 1.2 m DC O/P: Shielded, 1.8 m
12.	SD Card	SanDisk	4G class 4	FCC DoC	N/A	N/A
13.	SD Card	SanDisk	Uitra	N/A	N/A	N/A
14.	iPod nano 8GB	Apple	MC690 ZP/A	FCC DoC	Shielded, 1.2 m	N/A
15.	iPod	Apple	A1199	FCC DoC	Shielded, 1.2 m	N/A

2.4. EUT Operation Test Setup

The EUT was in GSM or WCDMA or LTE idle mode during the testing. The EUT was synchronized to the BCCH, and is in continuous receiving mode by setting system simulator's paging reorganization.

At the same time, the EUT was attached to the Bluetooth earphone or WLAN AP, and the following programs installed in the EUT were programmed during the test.

1. Data application is transferred between notebook and EUT via USB cable.
2. Execute "GPS/Glonass Test" to make the EUT receive continuous signals from GPS/Glonass station.
3. Turn on FM function.
4. Execute "Video player" to play MPEG4 files.
5. Turn on camera to capture images.

3. Test Result

3.1. Test of AC Conducted Emission Measurement

3.1.1 Limits of AC Conducted Emission

For equipment that is designed to be connected to the public utility (AC) power line, the radio frequency voltage that is conducted back onto the AC power line on any frequency or frequencies within the band 150 kHz to 30 MHz shall not exceed the limits in the following table.

Frequency of emission (MHz)	Conducted limit (dBuV)	
	Quasi-peak	Average
0.15-0.5	66 to 56*	56 to 46*
0.5-5	56	46
5-30	60	50

*Decreases with the logarithm of the frequency.

3.1.2 Measuring Instruments

The measuring equipment is listed in the section 4 of this test report.

3.1.3 Test Procedure

1. The EUT was placed 0.4 meter from the conducting wall of the shielding room was kept at least 80 centimeters from any other grounded conducting surface.
2. Connect EUT to the power mains through a line impedance stabilization network (LISN).
3. All the support units are connecting to the other LISN.
4. The LISN provides 50 ohm coupling impedance for the measuring instrument.
5. The FCC states that a 50 ohm, 50 microhenry LISN should be used.
6. Both sides of AC line were checked for maximum conducted interference.
7. The frequency range from 150 kHz to 30 MHz was searched.
8. Set the test-receiver system to Peak Detect Function and specified bandwidth (IF Bandwidth = 9kHz) with Maximum Hold Mode. Then measurement is also conducted by Average Detector and Quasi-Peak Detector Function respectively.

3.1.4 Test Setup

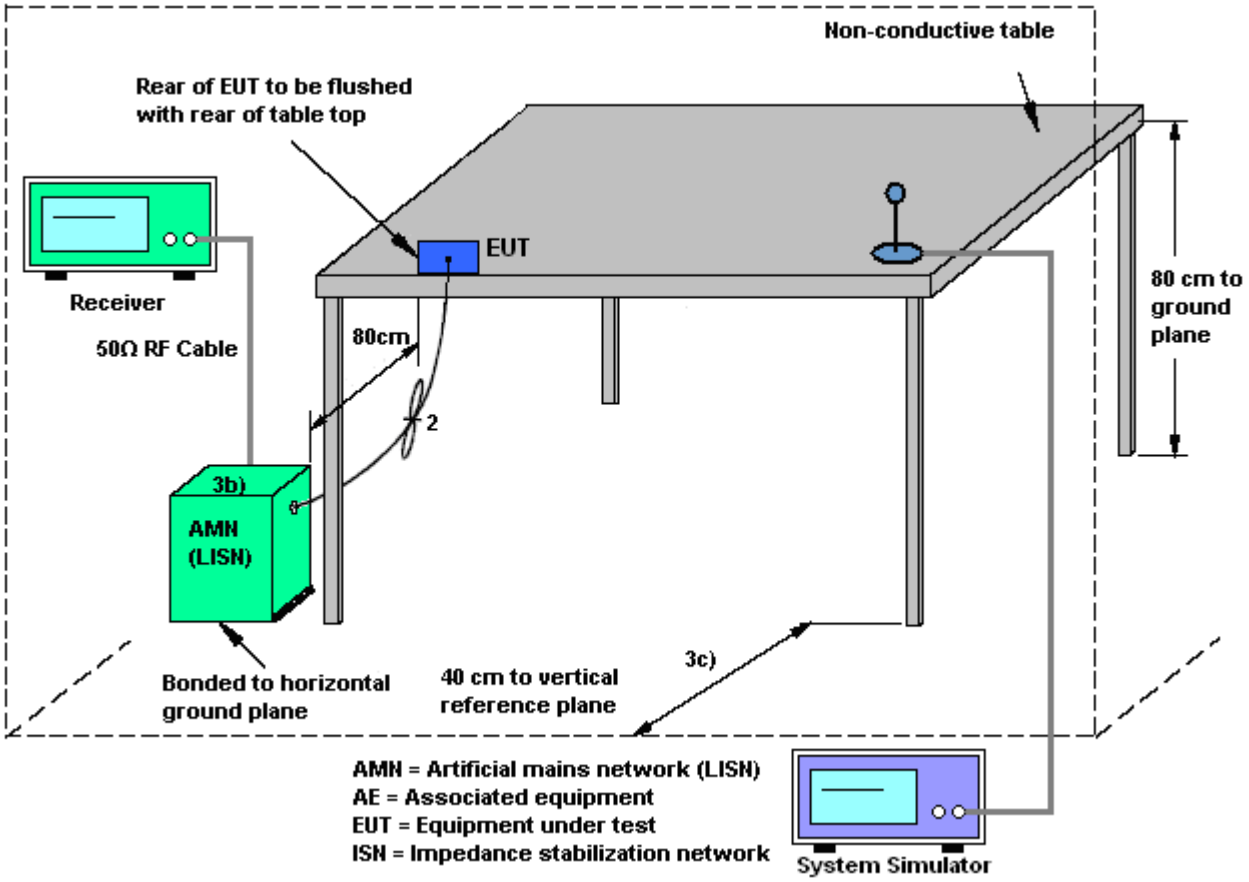

3.1.5 Test Result of AC Conducted Emission

Test Mode :	Mode 2	**Temperature :**	21~23℃
Test Engineer :	Tao Cheng	**Relative Humidity :**	41~43%
Test Voltage :	120Vac / 60Hz	**Phase :**	Line
Function Type :	WCDMA Band II Idle + Bluetooth Idle + WLAN Idle + USB Cable (Charging from Adapter) + Earphone + Camera(Back) + SIM2 + SD Card		

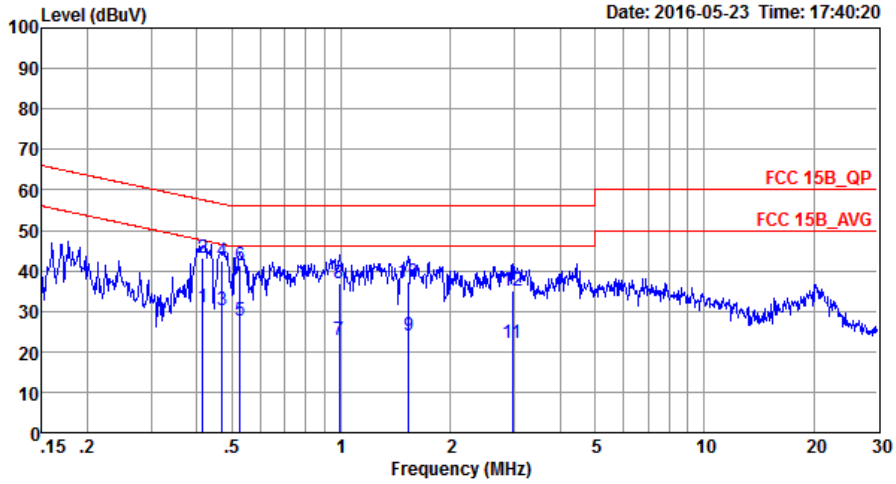

Site : CO01-SZ
Condition: FCC 15B_QP LISN_20160509 LINE
Project : (FC)642902
Mode : Mode 2
IMEI : 866689029996223/866689029997874

	Freq	Level	Over Limit	Limit Line	Read Level	LISN Factor	Cable Loss	Remark
	MHz	dBuV	dB	dBuV	dBuV	dB	dB	
1	0.41	31.16	-16.39	47.55	20.81	0.11	10.24	Average
2	0.41	43.35	-14.20	57.55	33.00	0.11	10.24	QP
3	0.47	30.24	-16.25	46.49	19.90	0.11	10.23	Average
4 *	0.47	42.34	-14.15	56.49	32.00	0.11	10.23	QP
5	0.53	27.52	-18.48	46.00	17.20	0.11	10.21	Average
6	0.53	41.32	-14.68	56.00	31.00	0.11	10.21	QP
7	0.99	22.77	-23.23	46.00	12.50	0.11	10.16	Average
8	0.99	37.07	-18.93	56.00	26.80	0.11	10.16	QP
9	1.54	23.98	-22.02	46.00	13.70	0.11	10.17	Average
10	1.54	37.28	-18.72	56.00	27.00	0.11	10.17	QP
11	2.96	22.22	-23.78	46.00	11.90	0.12	10.20	Average
12	2.96	35.12	-20.88	56.00	24.80	0.12	10.20	QP

Test Mode :	Mode 2	**Temperature :**	21~23℃
Test Engineer :	Tao Cheng	**Relative Humidity :**	41~43%
Test Voltage :	120Vac / 60Hz	**Phase :**	Neutral
Function Type :	WCDMA Band II Idle + Bluetooth Idle + WLAN Idle + USB Cable (Charging from Adapter) + Earphone + Camera(Back) + SIM2 + SD Card		

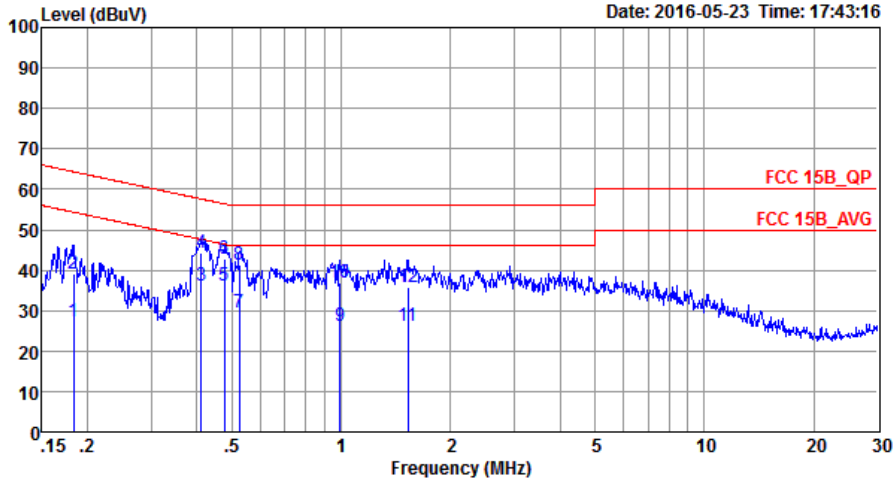

Site : CO01-SZ
Condition: FCC 15B_QP LISN_20160509 NEUTRAL
Project : (FC)642902
Mode : Mode 2
IMEI : 866689029996223/866689029997874

	Freq	Level	Over Limit	Limit Line	Read Level	LISN Factor	Cable Loss	Remark
	MHz	dBuV	dB	dBuV	dBuV	dB	dB	
1	0.18	27.25	-27.08	54.33	16.60	0.12	10.53	Average
2	0.18	39.25	-25.08	64.33	28.60	0.12	10.53	QP
3	0.41	36.16	-11.43	47.59	25.80	0.11	10.25	Average
4	0.41	44.16	-13.43	57.59	33.80	0.11	10.25	QP
5 *	0.48	36.14	-10.27	46.41	25.80	0.11	10.23	Average
6	0.48	42.74	-13.67	56.41	32.40	0.11	10.23	QP
7	0.52	29.62	-16.38	46.00	19.30	0.11	10.21	Average
8	0.52	41.32	-14.68	56.00	31.00	0.11	10.21	QP
9	0.99	26.17	-19.83	46.00	15.90	0.11	10.16	Average
10	0.99	37.07	-18.93	56.00	26.80	0.11	10.16	QP
11	1.53	26.08	-19.92	46.00	15.80	0.11	10.17	Average
12	1.53	35.98	-20.02	56.00	25.70	0.11	10.17	QP

Test Mode :	Mode 5	**Temperature :**	21~23℃
Test Engineer :	Tao Cheng	**Relative Humidity :**	41~43%
Test Voltage :	120Vac / 60Hz	**Phase :**	Line
Function Type :	LTE Band 4 Idle + Bluetooth Idle + WLAN Idle + USB Cable (Data Link with Notebook) + Earphone + SD Card + GPS Rx + FM Rx + SIM2		

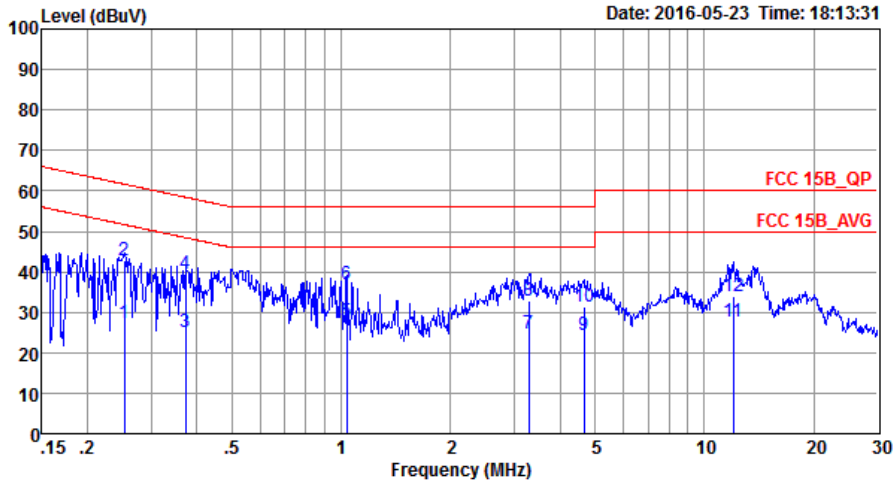

Site : CO01-SZ
Condition: FCC 15B_QP LISN_20160509 LINE
Project : (FC)642902

IMEI : 866689029996223/866689029997874

		Freq	Level	Over Limit	Limit Line	Read Level	LISN Factor	Cable Loss	Remark
		MHz	dBuV	dB	dBuV	dBuV	dB	dB	
1		0.25	27.36	-24.28	51.64	16.80	0.11	10.45	Average
2		0.25	42.76	-18.88	61.64	32.20	0.11	10.45	QP
3		0.37	25.00	-23.43	48.43	14.60	0.11	10.29	Average
4		0.37	39.40	-19.03	58.43	29.00	0.11	10.29	QP
5	*	1.04	27.77	-18.23	46.00	17.50	0.11	10.16	Average
6		1.04	36.87	-19.13	56.00	26.60	0.11	10.16	QP
7		3.29	24.63	-21.37	46.00	14.30	0.12	10.21	Average
8		3.29	32.73	-23.27	56.00	22.40	0.12	10.21	QP
9		4.67	24.18	-21.82	46.00	13.80	0.14	10.24	Average
10		4.67	31.38	-24.62	56.00	21.00	0.14	10.24	QP
11		12.00	27.57	-22.43	50.00	16.90	0.30	10.37	Average
12		12.00	33.97	-26.03	60.00	23.30	0.30	10.37	QP

Test Mode :	Mode 5	**Temperature :**	21~23℃
Test Engineer :	Tao Cheng	**Relative Humidity :**	41~43%
Test Voltage :	120Vac / 60Hz	**Phase :**	Neutral
Function Type :	LTE Band 4 Idle + Bluetooth Idle + WLAN Idle + USB Cable (Data Link with Notebook) + Earphone + SD Card + GPS Rx + FM Rx + SIM2		

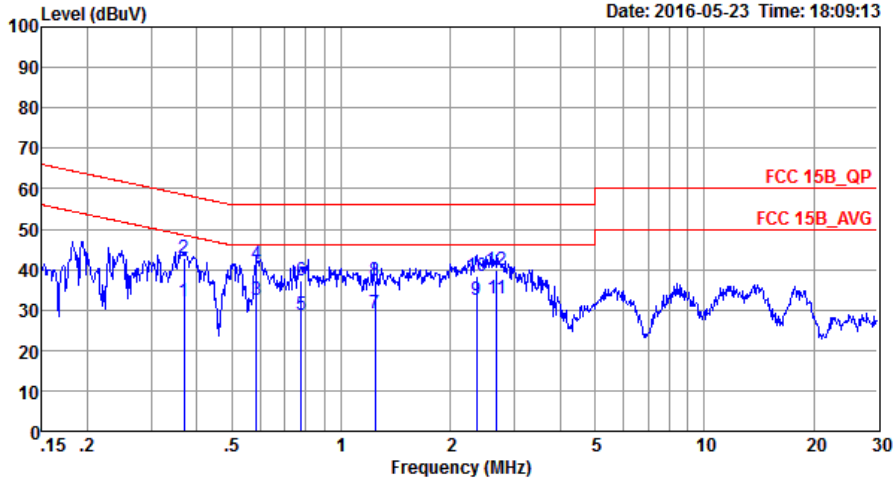

Site : CO01-SZ
Condition: FCC 15B_QP LISN_20160509 NEUTRAL
Project : (FC)642902

IMEI : 866689029996223/866689029997874

	Freq	Level	Over Limit	Limit Line	Read Level	LISN Factor	Cable Loss	Remark
	MHz	dBuV	dB	dBuV	dBuV	dB	dB	
1	0.37	32.11	-16.41	48.52	21.70	0.11	10.30	Average
2	0.37	42.91	-15.61	58.52	32.50	0.11	10.30	QP
3	0.59	32.30	-13.70	46.00	22.00	0.11	10.19	Average
4	0.59	41.50	-14.50	56.00	31.20	0.11	10.19	QP
5	0.78	28.67	-17.33	46.00	18.40	0.11	10.16	Average
6	0.78	37.37	-18.63	56.00	27.10	0.11	10.16	QP
7	1.24	28.97	-17.03	46.00	18.70	0.11	10.16	Average
8	1.24	37.17	-18.83	56.00	26.90	0.11	10.16	QP
9	2.36	32.60	-13.40	46.00	22.31	0.11	10.18	Average
10	2.36	38.30	-17.70	56.00	28.01	0.11	10.18	QP
11 *	2.68	32.81	-13.19	46.00	22.50	0.12	10.19	Average
12	2.68	39.71	-16.29	56.00	29.40	0.12	10.19	QP

3.2. Test of Radiated Emission Measurement

3.2.1. Limit of Radiated Emission

The emissions from an unintentional radiator shall not exceed the field strength levels specified in the following table:

Frequency (MHz)	Field Strength (microvolts/meter)	Measurement Distance (meters)
30 – 88	100	3
88 – 216	150	3
216 - 960	200	3
Above 960	500	3

3.2.2. Measuring Instruments

The measuring equipment is listed in the section 4 of this test report.

3.2.3. Test Procedures

1. The EUT was placed on a turntable with 0.8 meter above ground.
2. The EUT was set 3 meters from the interference receiving antenna, which was mounted on the top of a variable height antenna tower.
3. The table was rotated 360 degrees to determine the position of the highest radiation.
4. The antenna height is adjusted between one to four meters above ground to find the maximum value of the field strength for both horizontal polarization and vertical polarization of the antenna.
5. For each suspected emission, the EUT was arranged to its worst case and then tune the antenna tower (from 1 m to 4 m) and turntable (from 0 degree to 360 degrees) to find the maximum reading.
6. Set the test-receiver system to Peak Detect Function and specified bandwidth with Maximum Hold Mode (RBW=120kHz/VBW=300kHz for frequency below 1GHz; RBW=1MHz VBW=3MHz (Peak), RBW=1MHz/VBW=10Hz (Average) for frequency above 1GHz).
7. If the emission level of the EUT in peak mode was 3 dB lower than the limit specified, peak values of EUT will be reported. Otherwise, the emission will be repeated by using the quasi-peak method and reported.
8. Emission level (dBμV/m) = 20 log Emission level (μV/m)
9. Corrected Reading: Antenna Factor + Cable Loss + Read Level - Preamp Factor = Level

3.2.4. Test Setup of Radiated Emission

For radiated emissions from 30MHz to 1GHz

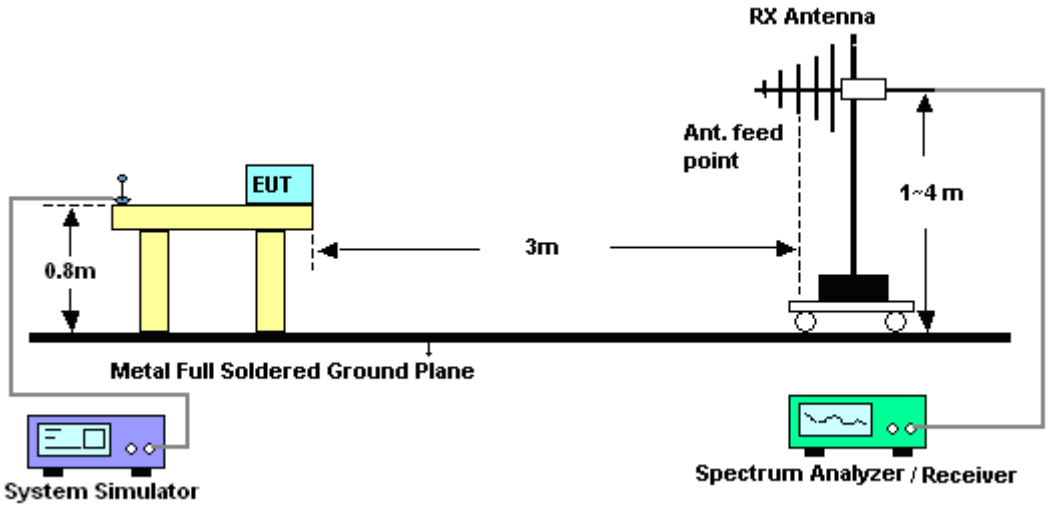

For radiated emissions above 1GHz

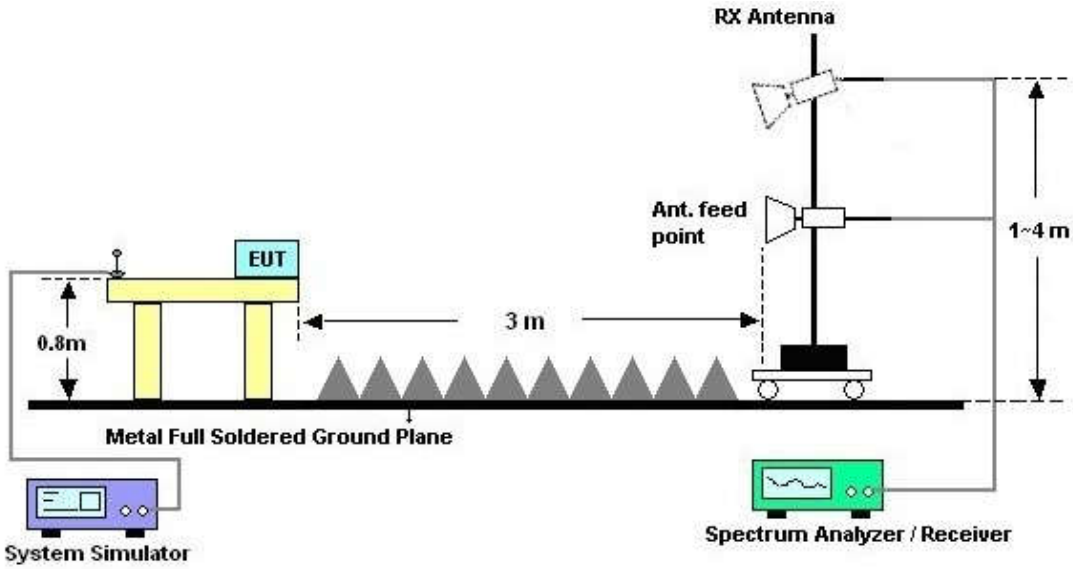

3.2.5. Test Result of Radiated Emission

Test Mode :	Mode 5	**Temperature :**	21~22℃
Test Engineer :	Jason Peng	**Relative Humidity :**	41~42%
Test Distance :	3m	**Polarization :**	Horizontal
Function Type :	LTE Band 4 Idle + Bluetooth Idle + WLAN Idle + USB Cable (Data Link with Notebook) + Earphone + SD Card + GPS Rx + FM Rx + SIM2		

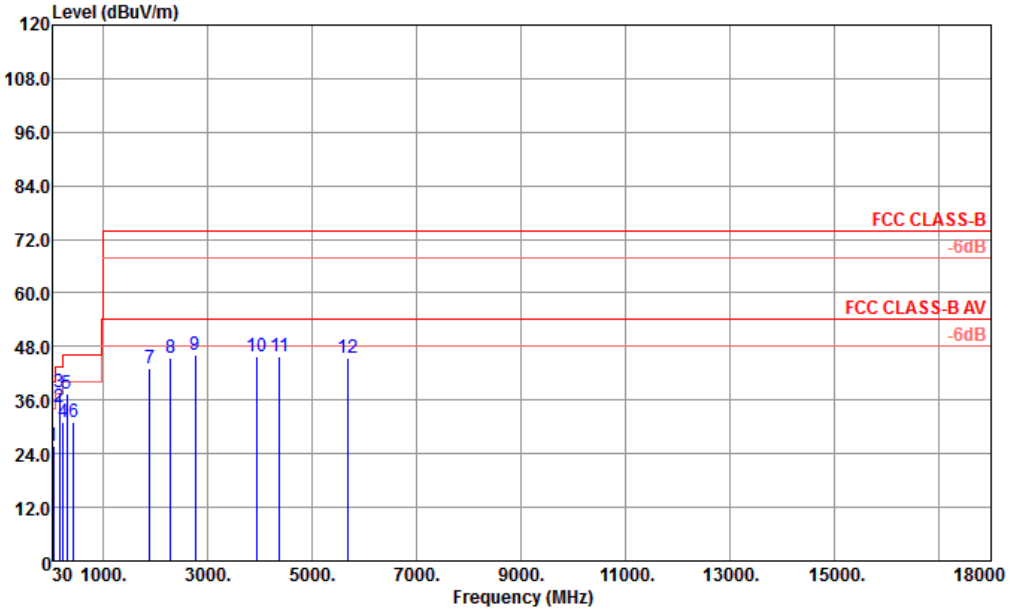

Site : 03CH02-KS
Condition : FCC CLASS-B 3m 966-02 LF ANT HORIZONTAL
Project : (FC) 642902
Mode : 5
IMEI : 866689029996207 866689029997858 (#3)

		Freq	Level	Over Limit	Limit Line	Read Level	Antenna Factor	Cable Loss	Preamp Factor	A/Pos	T/Pos	Remark	Pol/Phas
		MHz	dBuV/m	dB	dBuV/m	dBuV	dB/m	dB	dB	cm	deg		
1		53.76	25.79	-14.21	40.00	42.03	14.33	0.15	30.72	---	---	Peak	HORIZONT
2		159.33	34.47	-9.03	43.50	47.39	17.14	0.34	30.40	---	---	Peak	HORIZONT
3	!	165.27	37.62	-5.88	43.50	50.81	16.86	0.35	30.40	100	215	Peak	HORIZONT
4		239.25	30.95	-15.05	46.00	44.03	16.92	0.48	30.48	---	---	Peak	HORIZONT
5		313.30	37.51	-8.49	46.00	48.91	18.50	0.63	30.53	---	---	Peak	HORIZONT
6		431.60	31.15	-14.85	46.00	36.01	24.79	0.92	30.57	---	---	Peak	HORIZONT
7		1888.00	43.02	-30.98	74.00	44.27	29.50	4.52	35.27	---	---	Peak	HORIZONT
8		2300.00	45.38	-28.62	74.00	42.18	31.29	5.67	33.76	---	---	Peak	HORIZONT
9		2770.00	46.23	-27.77	74.00	39.95	32.03	2.81	28.56	---	---	Peak	HORIZONT
10		3954.00	45.86	-28.14	74.00	36.51	34.79	6.25	31.69	---	---	Peak	HORIZONT
11		4386.00	45.89	-28.11	74.00	37.08	35.23	4.93	31.35	---	---	Peak	HORIZONT
12		5688.00	45.61	-28.39	74.00	39.73	35.33	7.38	36.83	---	---	Peak	HORIZONT

Test Mode :	Mode 5	**Temperature :**	21~22°C
Test Engineer :	Jason Peng	**Relative Humidity :**	41~42%
Test Distance :	3m	**Polarization :**	Vertical
Function Type :	LTE Band 4 Idle + Bluetooth Idle + WLAN Idle + USB Cable (Data Link with Notebook) + Earphone + SD Card + GPS Rx + FM Rx + SIM2		

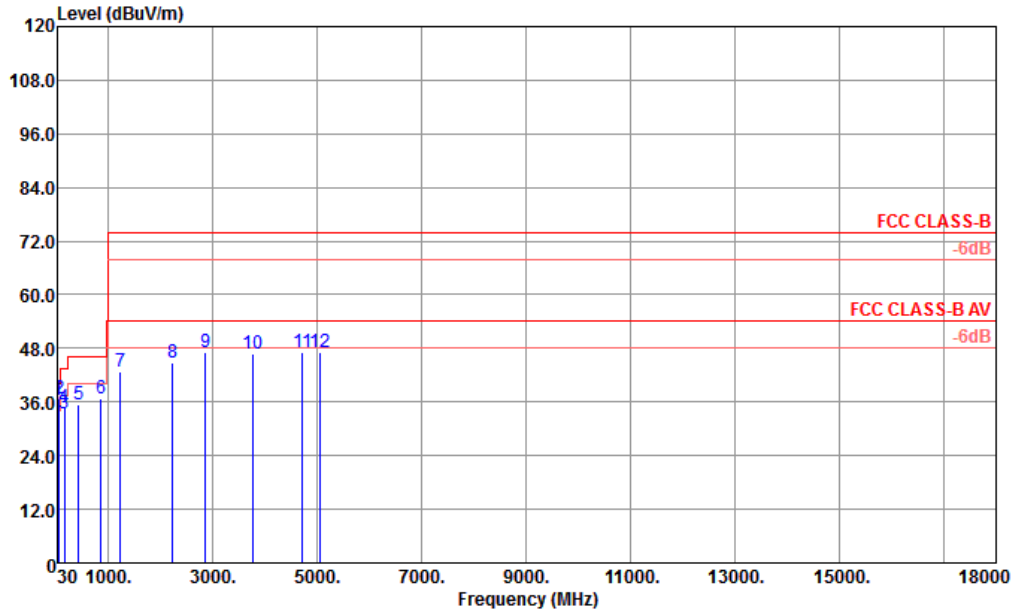

Site : 03CH02-KS
Condition : FCC CLASS-B 3m 966-02 LF ANT VERTICAL
Project : (FC) 642902
Mode : 5
IMEI : 866689029996207 866689029997858 (#3)

		Freq MHz	Level dBuV/m	Over Limit dB	Limit Line dBuV/m	ReadLevel dBuV	Antenna Factor dB/m	Cable Loss dB	Preamp Factor dB	A/Pos cm	T/Pos deg	Remark	Pol/Phas
1	!	55.65	36.60	-3.40	40.00	53.23	13.90	0.15	30.68	---	---	Peak	VERTICAL
2	!	59.97	36.80	-3.20	40.00	54.56	12.70	0.16	30.62	100	98	Peak	VERTICAL
3		159.33	33.43	-10.07	43.50	46.35	17.14	0.34	30.40	---	---	Peak	VERTICAL
4		165.27	34.74	-8.76	43.50	47.93	16.86	0.35	30.40	---	---	Peak	VERTICAL
5		431.60	35.44	-10.56	46.00	40.30	24.79	0.92	30.57	---	---	Peak	VERTICAL
6		864.20	36.63	-9.37	46.00	38.31	27.31	1.47	30.46	---	---	Peak	VERTICAL
7		1244.00	42.95	-31.05	74.00	47.95	28.35	3.31	36.66	---	---	Peak	VERTICAL
8		2232.00	44.68	-29.32	74.00	41.88	31.22	5.75	34.17	---	---	Peak	VERTICAL
9		2870.00	47.12	-26.88	74.00	39.95	32.27	2.85	27.95	---	---	Peak	VERTICAL
10		3786.00	46.74	-27.26	74.00	37.19	34.55	6.51	31.51	---	---	Peak	VERTICAL
11		4725.00	47.20	-26.80	74.00	38.86	35.08	5.83	32.57	---	---	Peak	VERTICAL
12		5067.00	47.03	-26.97	74.00	40.70	34.85	6.16	34.68	---	---	Peak	VERTICAL

4. List of Measuring Equipment

Instrument	Manufacturer	Model No.	Serial No.	Characteristics	Calibration Date	Test Date	Due Date	Remark
EMI Test Receiver	R&S	ESR7	101404	9kHz~7GHz; Max 30dBm	Oct. 20, 2015	May 23, 2016	Oct. 19, 2016	Conduction (CO01-SZ)
AC LISN	EMCO	3816/2SH	00103892	9kHz~30MHz	Jan. 12, 2016	May 23, 2016	Jan. 11, 2017	Conduction (CO01-SZ)
AC LISN (for auxiliary equipment)	MessTec	3816/2SH	00103912	9kHz~30MHz	Jan. 12, 2016	May 23, 2016	Jan. 11, 2017	Conduction (CO01-SZ)
AC Power Source	Chroma	61602	616020000891	100Vac~250Vac	Aug. 07, 2015	May 23, 2016	Aug. 06, 2016	Conduction (CO01-SZ)
Pulse Limiter	COM-POWER	LIT-153 Transient Limiter	53139	150kHz~30MHz	Oct. 20, 2015	May 23, 2016	Oct. 19, 2016	Conduction (CO01-SZ)
EMI Test Receiver	R&S	ESR7	101403	9kHz~7GHz; Max 30dBm	Sep. 10, 2015	Jun. 08, 2016	Sep. 09, 2016	Radiation (03CH02-KS)
EXA Spectrum Analyzer	Keysight	N9010A	MY55150208	10Hz~44GHz; Max 30dB	Apr. 22, 2016	Jun. 08, 2016	Apr. 21, 2017	Radiation (03CH02-KS)
Bilog Antenna	TeseQ	CBL6112D	37879	30MHz~2GHz	Sep. 12, 2015	Jun. 08, 2016	Sep. 11, 2016	Radiation (03CH02-KS)
Double Ridge Horn Antenna	ETS-Lindgren	3117	75957	1GHz~18GHz	Nov. 07, 2015	Jun. 08, 2016	Nov. 06, 2016	Radiation (03CH02-KS)
Amplifier	com-power	PA-103A	161069	1kHz~1000MHz / 32 dB	Apr. 22, 2016	Jun. 08, 2016	Apr. 21, 2017	Radiation (03CH02-KS)
Amplifier	Agilent	8449B	3008A02384	1~26.5GHz Gain 30dB	Oct. 24, 2015	Jun. 08, 2016	Oct. 23, 2016	Radiation (03CH02-KS)
AC Power Source	Chroma	61601	616010002473	N/A	NCR	Jun. 08, 2016	NCR	Radiation (03CH02-KS)
Turn Table	MF	MF7802	N/A	0~360 degree	NCR	Jun. 08, 2016	NCR	Radiation (03CH02-KS)
Antenna Mast	MF	MF7802	N/A	1 m~4 m	NCR	Jun. 08, 2016	NCR	Radiation (03CH02-KS)

NCR: No Calibration Required

5. Uncertainty of Evaluation

Uncertainty of Conducted Emission Measurement (150 kHz ~ 30 MHz)

Measuring Uncertainty for a Level of Confidence of 95% (U = 2Uc(y))	2.3 dB

Uncertainty of Radiated Emission Measurement (30 MHz ~ 1000 MHz)

Measuring Uncertainty for a Level of Confidence of 95% (U = 2Uc(y))	5.1dB

Uncertainty of Radiated Emission Measurement (1GHz ~ 18GHz)

Measuring Uncertainty for a Level of Confidence of 95% (U = 2Uc(y))	4.5dB