PLACE LABELS ORIENTED AS SHOWN

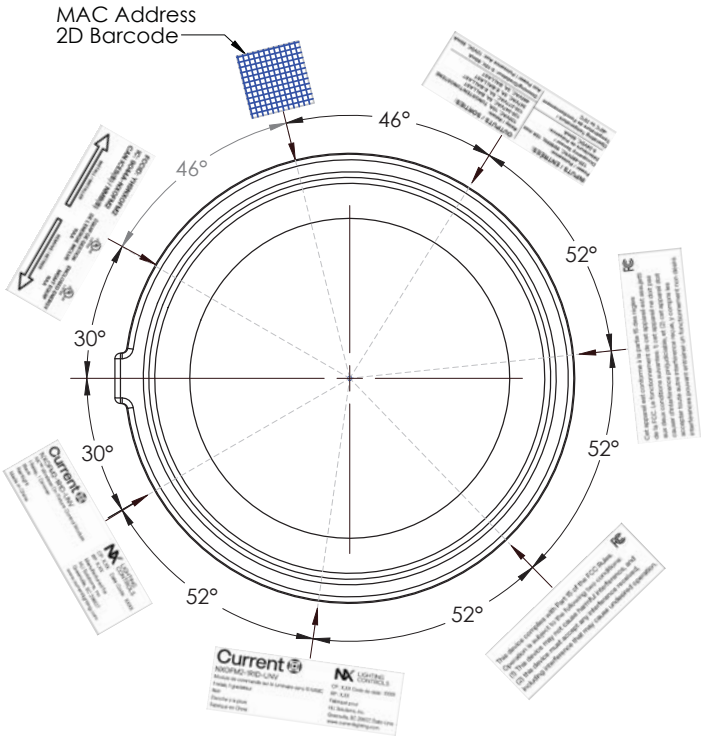

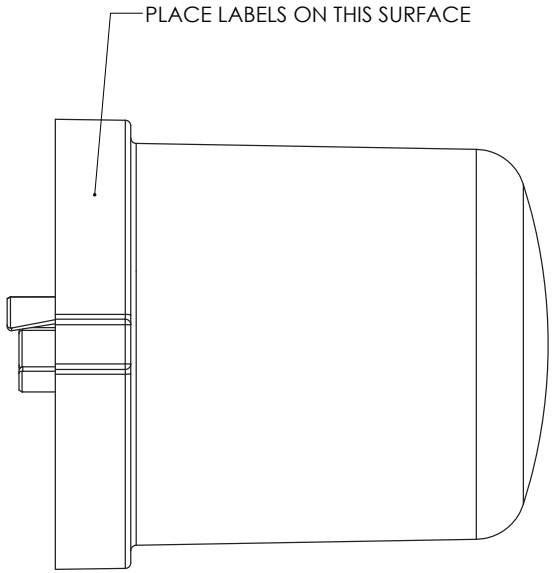

Current

710 HESTERS CROSSING RD, SUITE 100
ROUND ROCK, TX 78681

Title, Supplementary title

NXOFM2 ASSEMBLY

Part number	Rev.
95063057	B

Size	Scale	Sheet
A3	1:1	2 of 2