bottom view of EUT

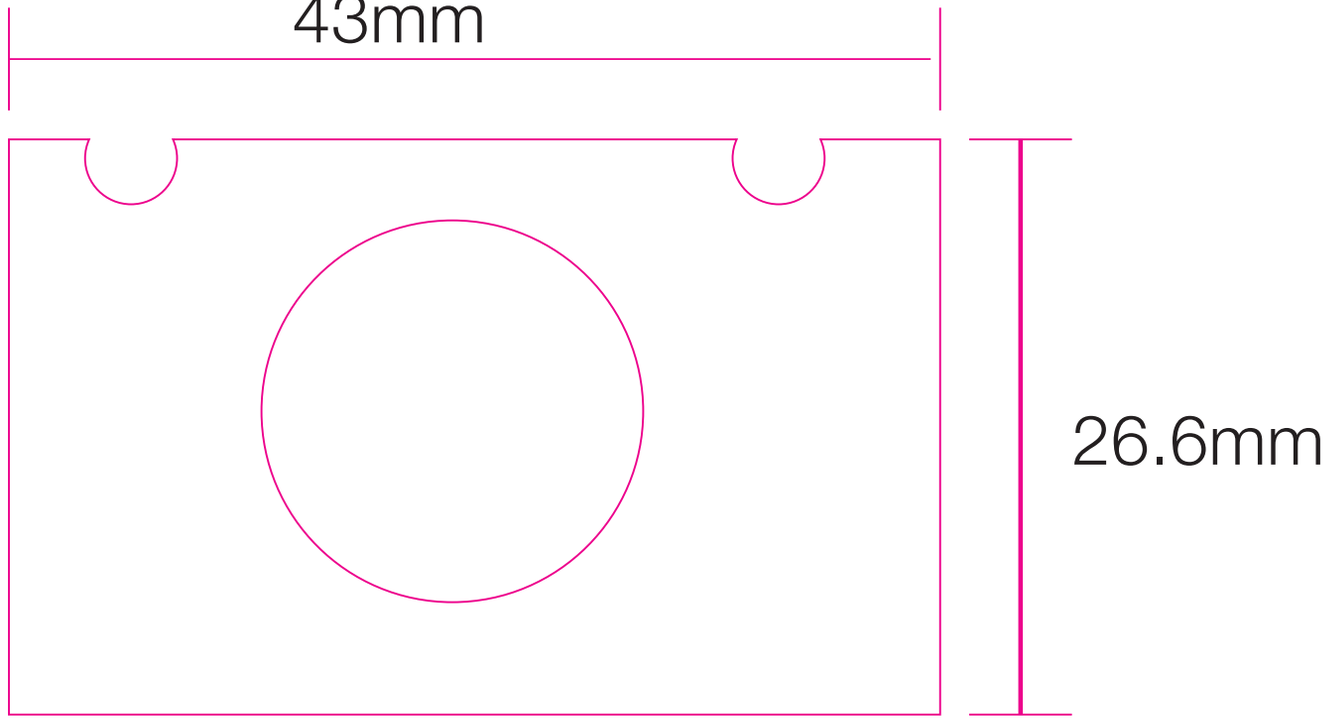

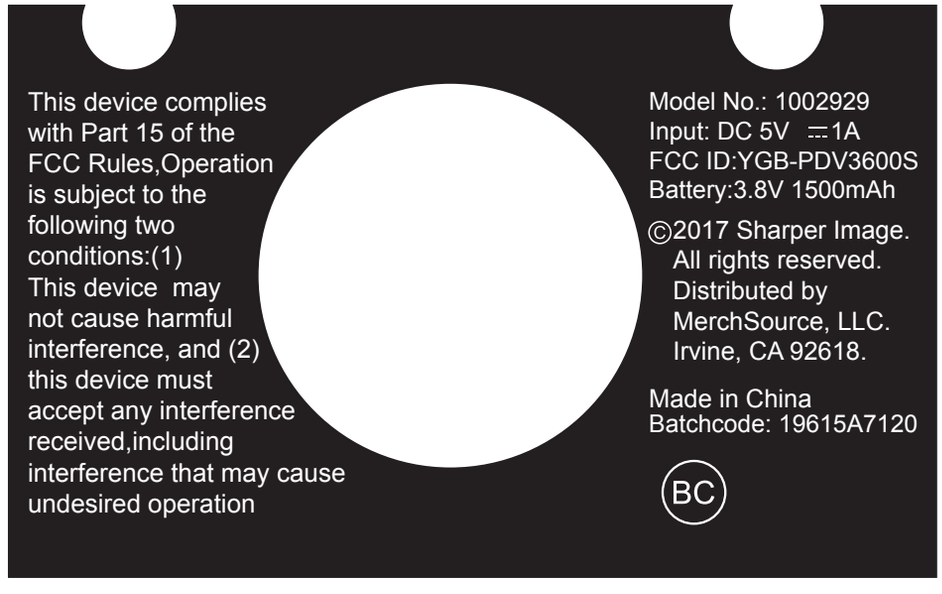

消银龙黑底银字过哑膜