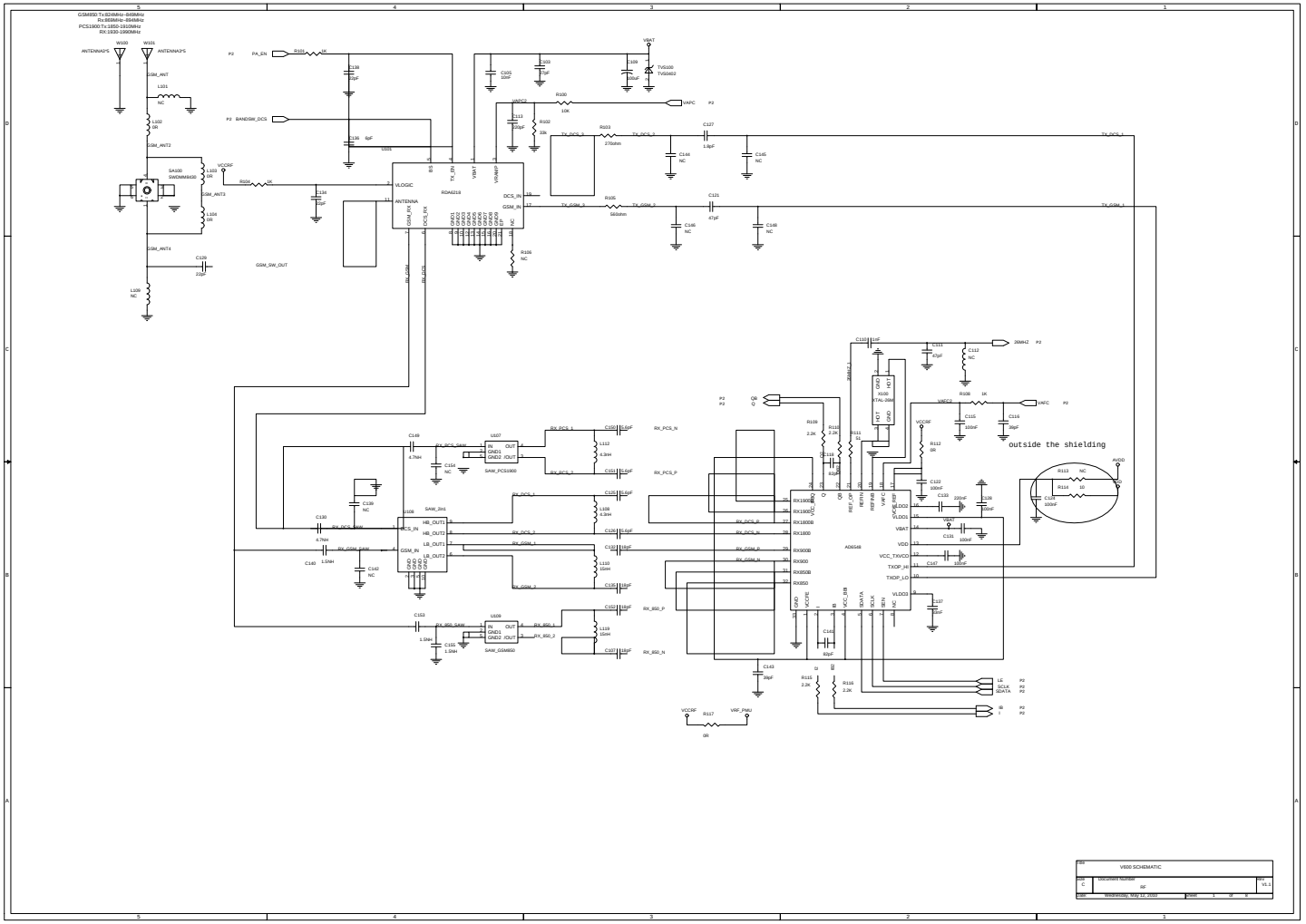

Title	V600 SCHEMATIC		
Size C	Document Number		Rev V1.1
	RC		
Date:	Wednesday, May 14, 2008	Sheet 1 of 8	

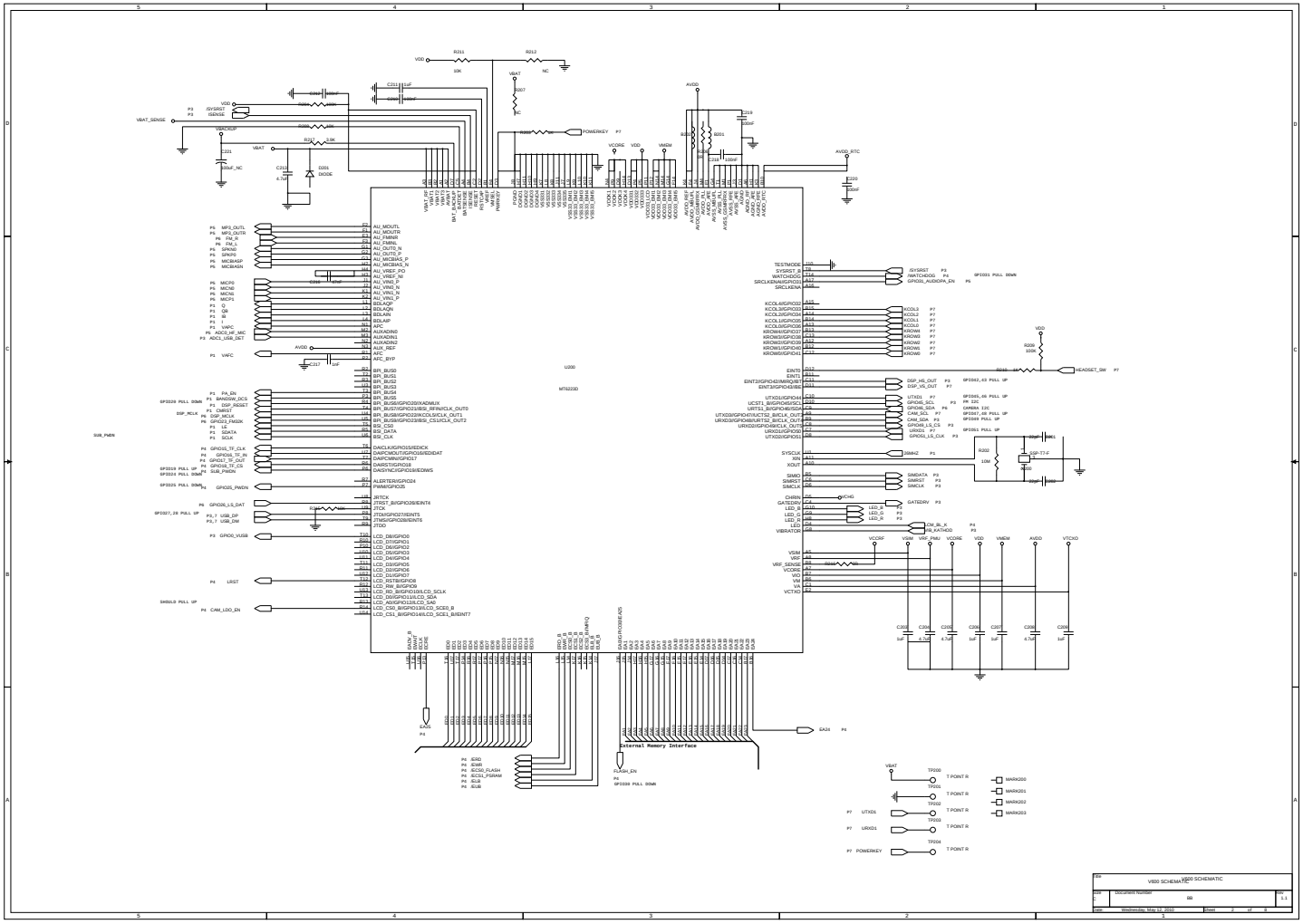
U200
MT6223D
Internal Memory Interface
V820 SCHEMATIC
Wednesday, May 12, 2010
Sheet 8 of 8

Charge

50 MILS

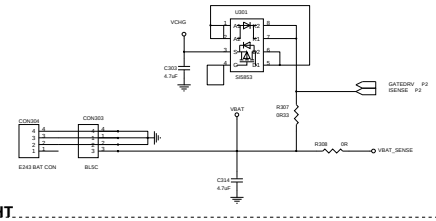

MOTOR

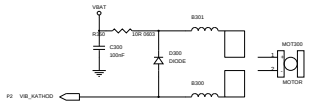

KEY BACKLIGHT

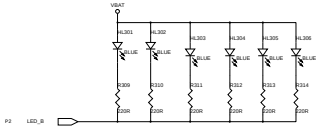

KEY LED

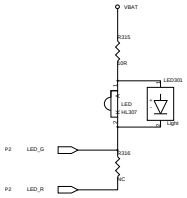

USB

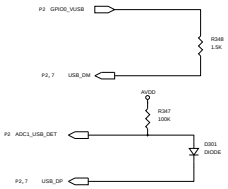

SIM CONNECTOR

MAIN SIM

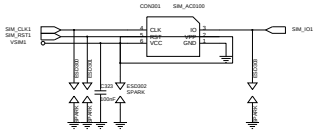

SUB SIM

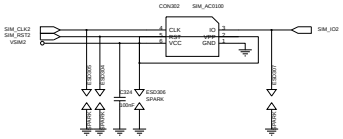

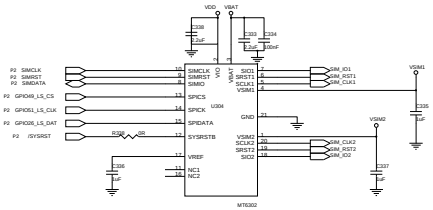

Title	V600 SCHEMATIC		
Size C	Document Number	BAT_KEYLED_SIM	Rev 1.1
Date	Wednesday, May 12, 2010	Sheet 3 of 3	

MEMORY

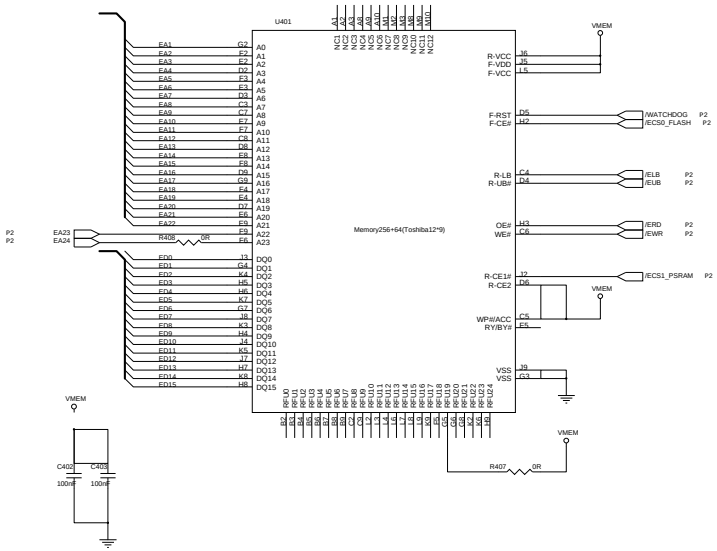

T-FLASH CONNECTOR

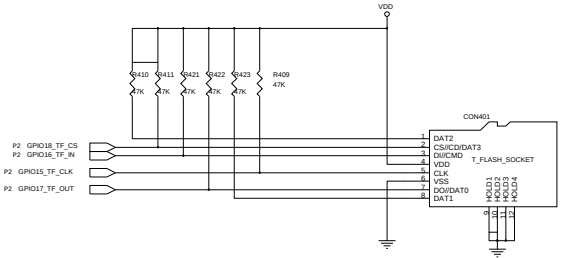

LCD CONNECTOR

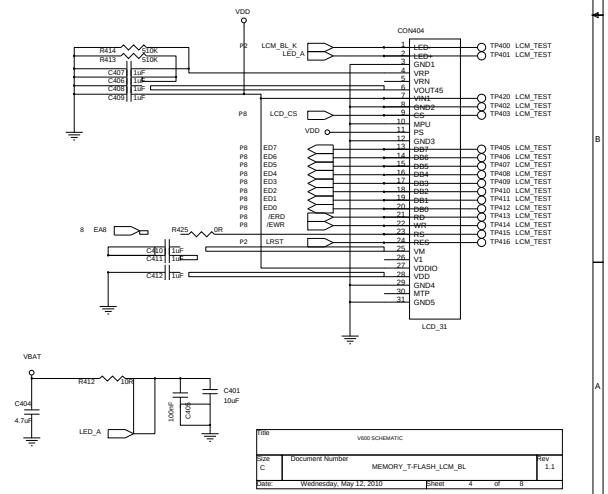

Title	V600 SCHEMATIC		
Size C	Document Number MEMORY_T-FLASH_LCM_BL		Rev 1.1
Date: Wednesday, May 12, 2010	Sheet 4 of 8		

NORMAL MICPHONE

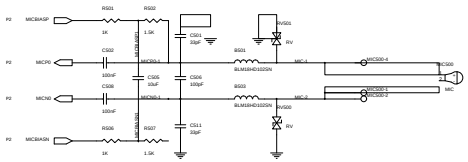

HEADSET MODE/DIGITAL MUSIC

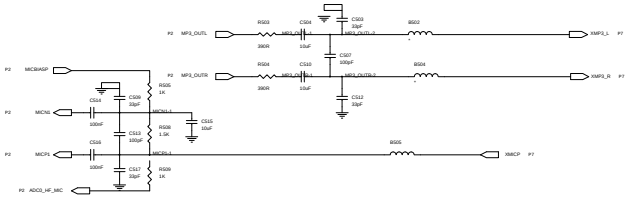

AUDIO PA

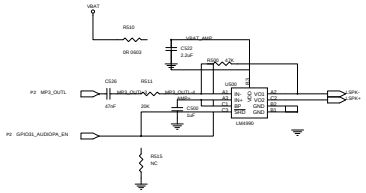

SPEAKER

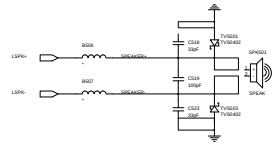

RECEIVER

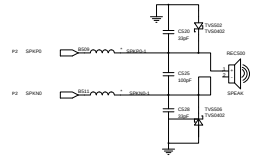

Title	V600 SCHEMATIC		
Size	Document Number		Rev
C	AUDIO		1.1
Date:	Wednesday, May 14, 2008	Sheet 5 of 8	

FM

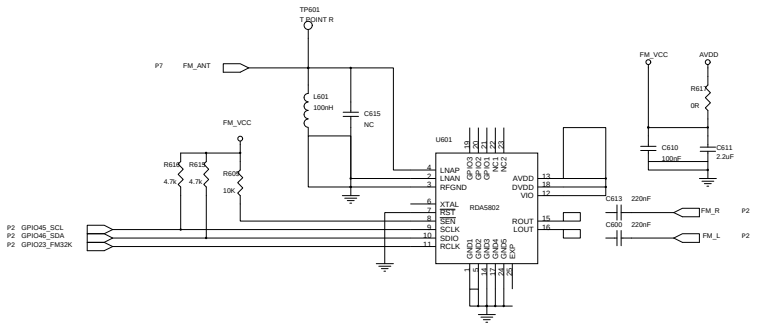

Title	V600 SCHEMATIC		
Size C	Document Number FM_LIGHT		Rev 1.1
Date: Wednesday, May 12, 2010		Sheet 6 of 8	

SYSTEM IO CONNECTOR

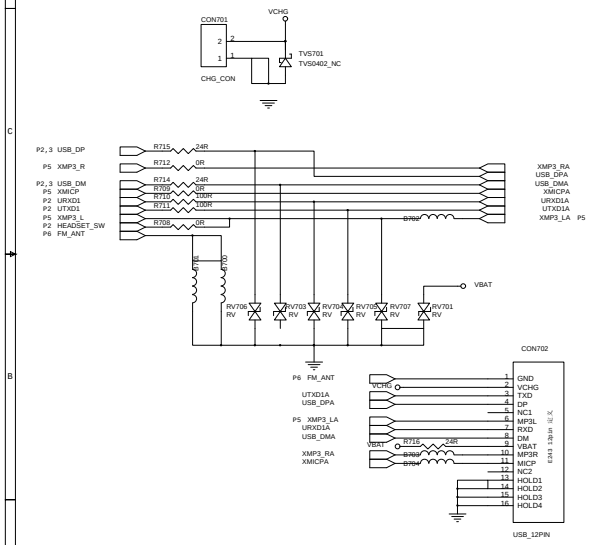

KEYPAD

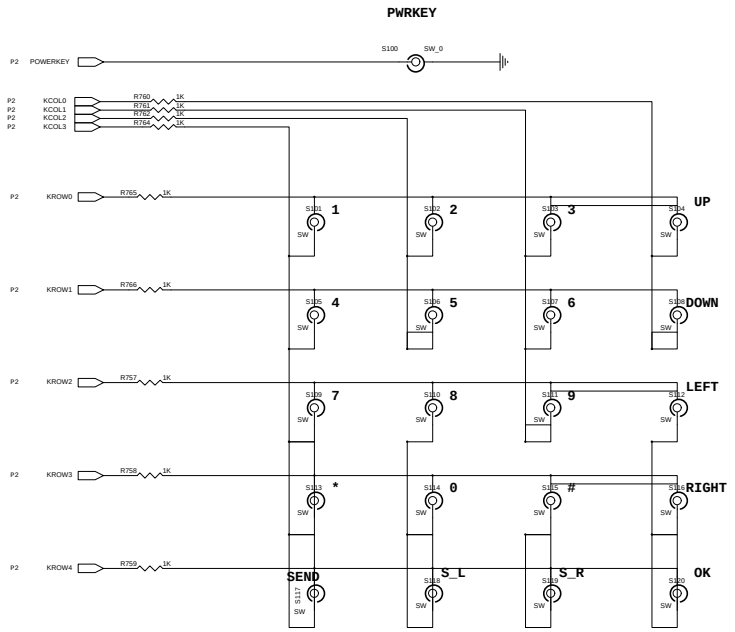

Title	V600 SCHEMATIC	
Size C	Document Number IO_KEY	Rev 1.1
Date: Wednesday, May 12, 2010	Sheet 7 of 8	

CAMERA DSP

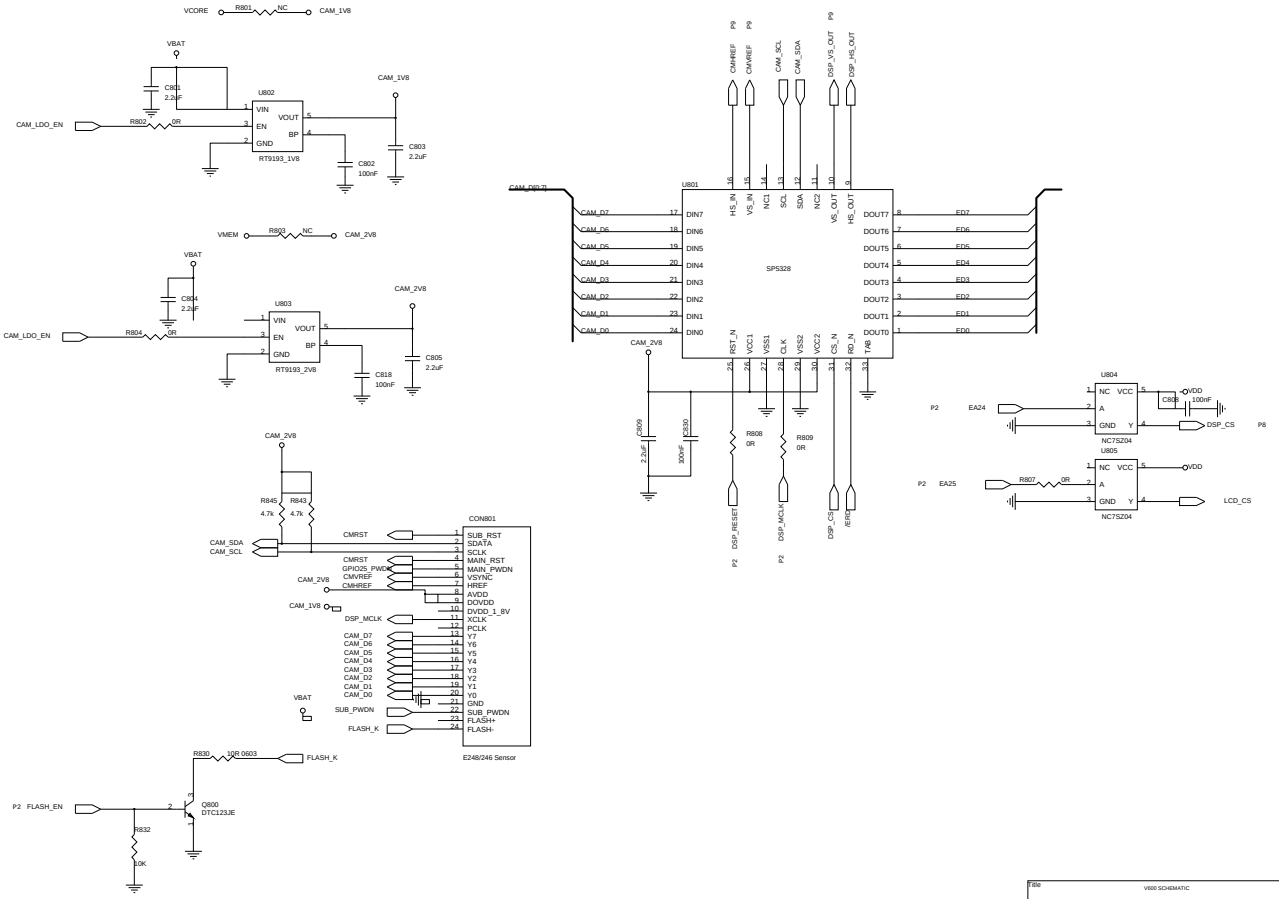

File	V600 SCHEMATIC		
Size C	Document Number CAMERA DSP		Rev 1.1
Date: Wednesday, May 12, 2010	Sheet 8 of 8		