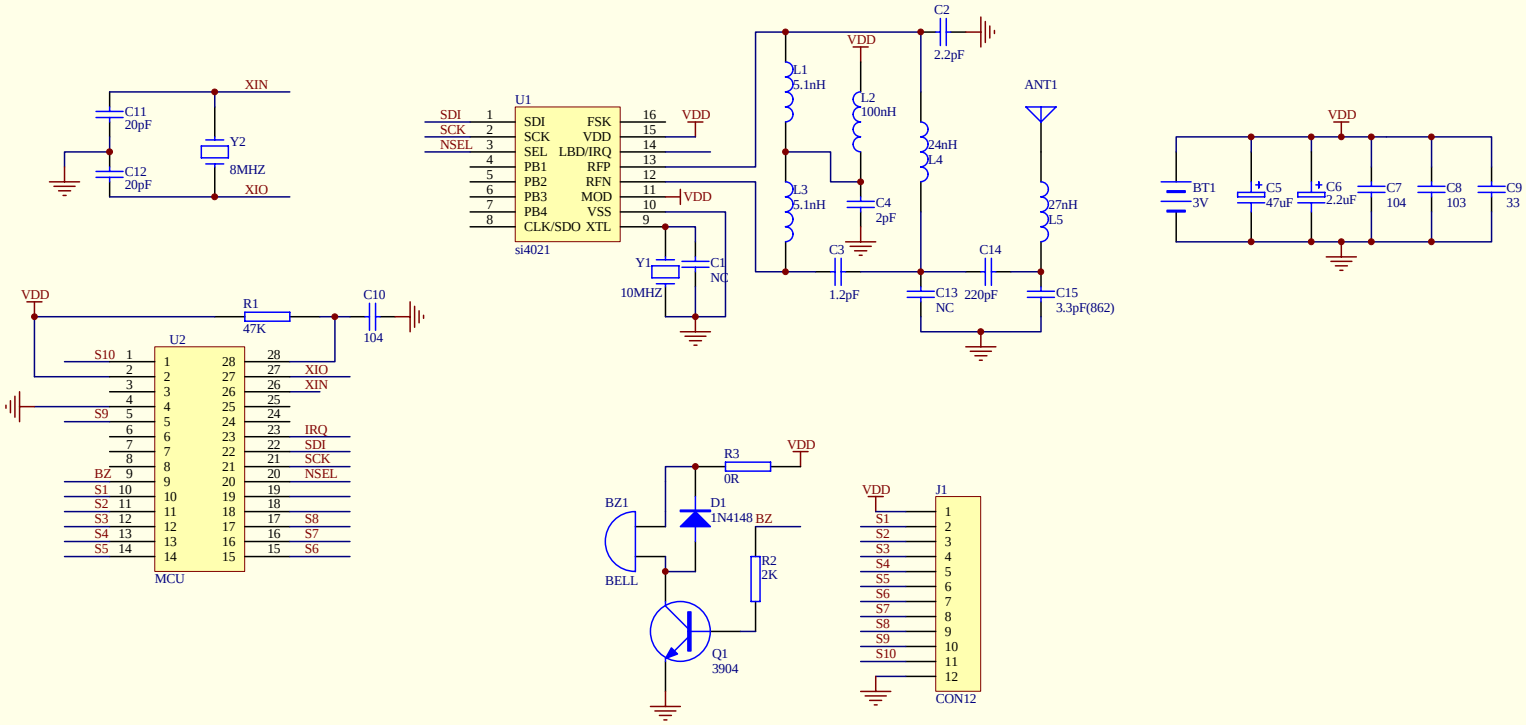

Title		
Size A4	Number V1.0	Revision
Date: 12-May-2010		Sheet of
File: C:\ITC-CXS07V4.ddb		Drawn By: