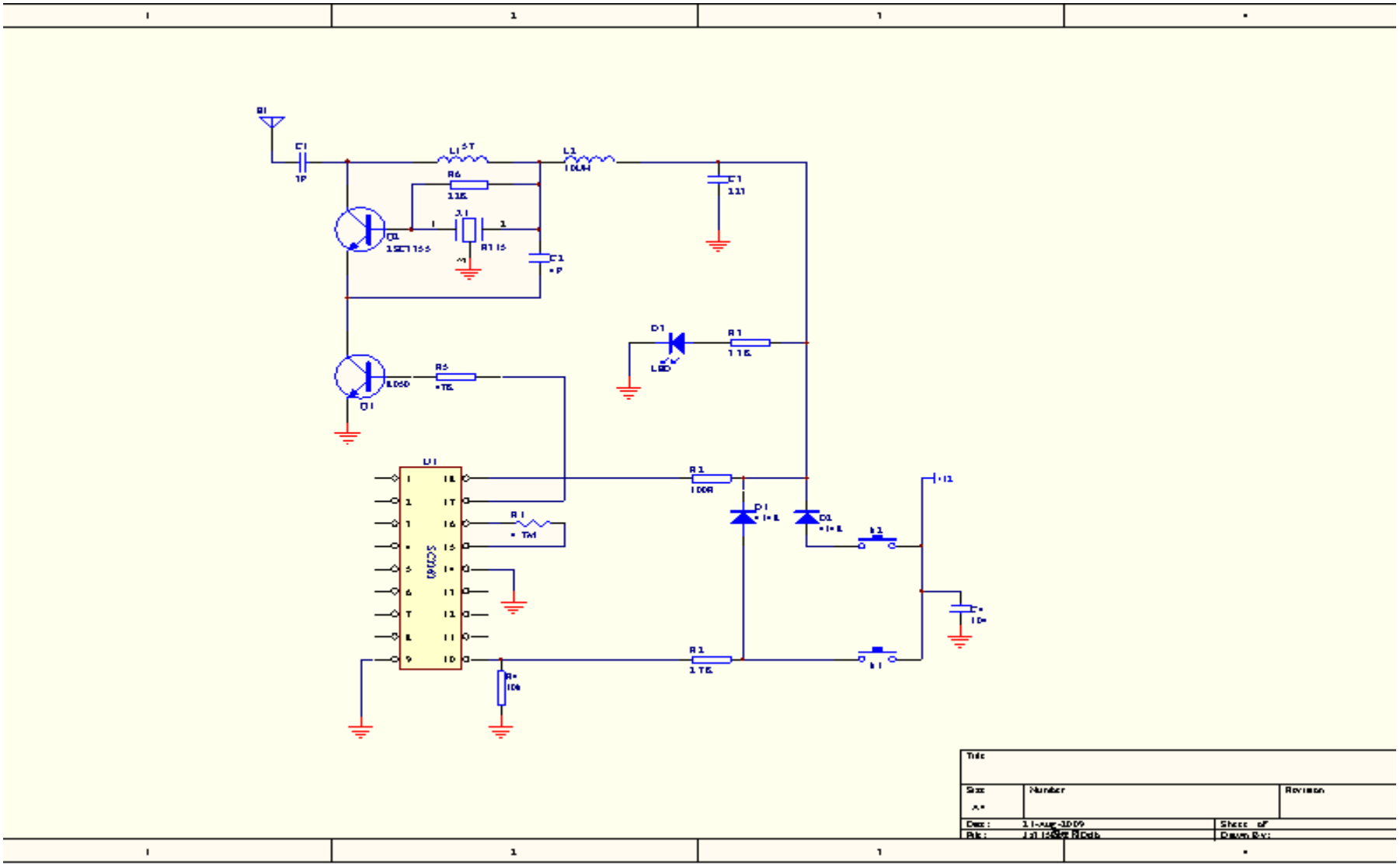
Title
Size
Number
Revision
Date:
Sheet of
File:
Drawn By: