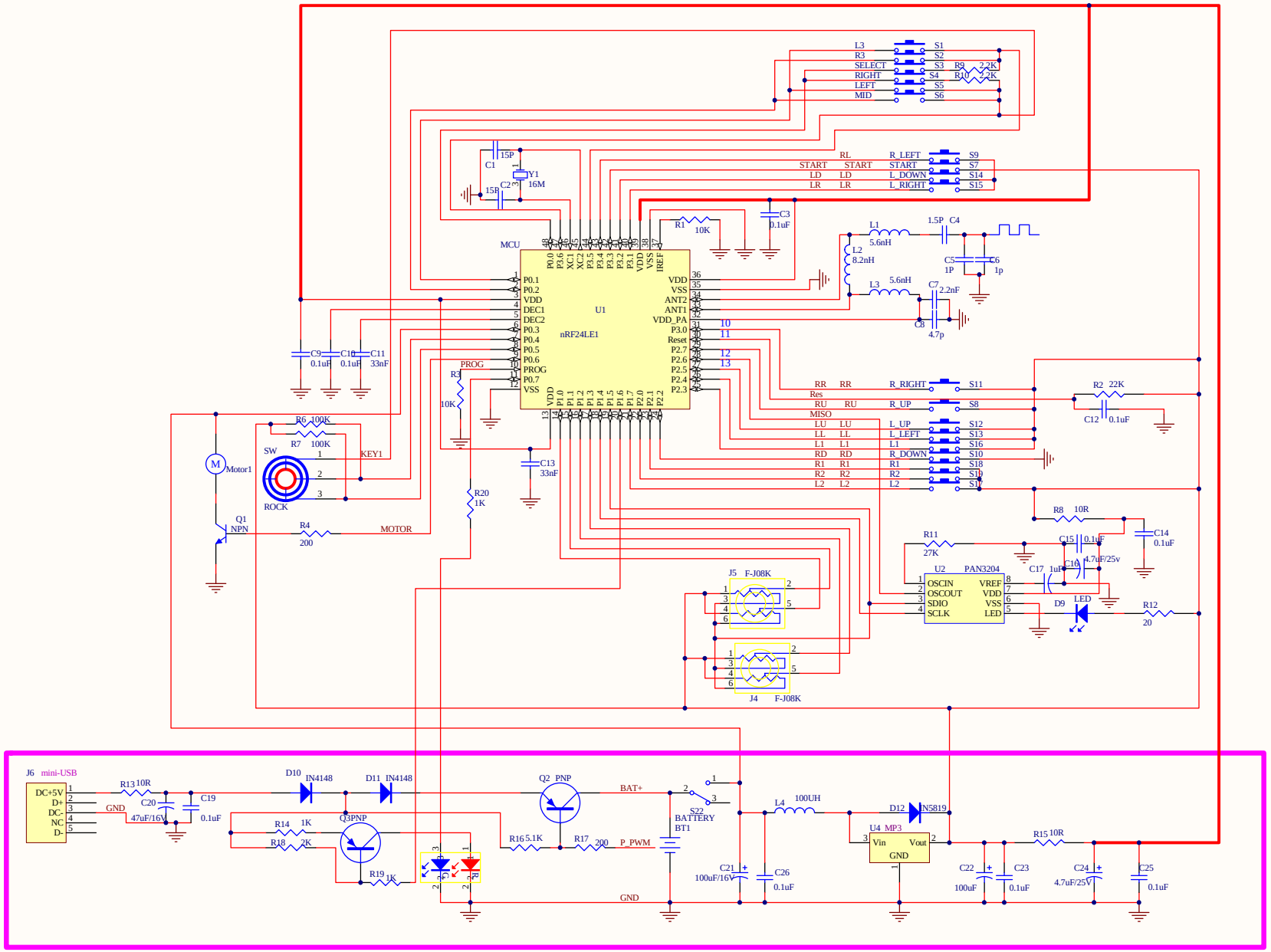

Title			
Size A2	Number		Revision
Date: 2010-5-10		Sheet of	
File: C:\Documents and Settings\..\光电鼠标-rz.SCHDOC		Drawn By:	