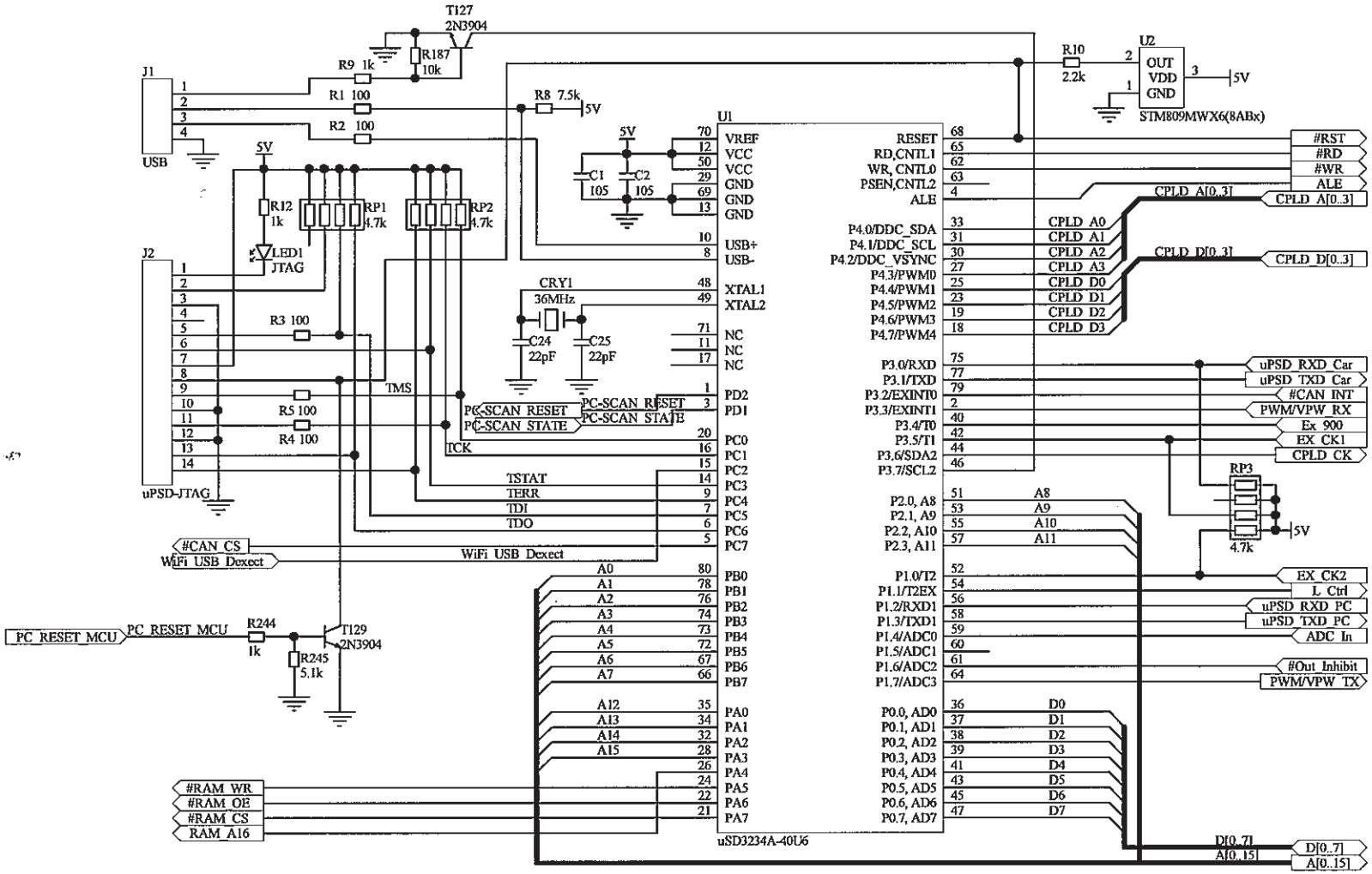
T127
2N3904
R187
10k
R9 1k
R1 100
R2 100
R8 7.5k
5V
J1
USB
R12
1k
RP1
4.7k
RP2
4.7k
LED1
JTAG
J2
uPSD-JTAG
R3 100
R5 100
R4 100
TMS
TCK
TSTAT
TERR
TDI
TDO
#CAN_CS
WiFi USB Dexect
PC-SCAN RESET
PC-SCAN STATE
PC_RESET MCU
R244
1k
R245
5.1k
T129
2N3904
#RAM_WR
#RAM_OE
#RAM_CS
RAM_A16
C1
105
C2
105
CRY1
36MHz
C24
22pF
C25
22pF
U1
VREF
VCC
GND
USB+
USB-
XTAL1
XTAL2
NC
PD2
PD1
PC0
PC1
PC2
PC3
PC4
PC5
PC6
PC7
PB0
PB1
PB2
PB3
PB4
PB5
PB6
PB7
PA0
PA1
PA2
PA3
PA4
PA5
PA6
PA7
uSD3234A-40U6
RESET
RD,CNTL1
WR, CNTL0
PSEN,CNTL2
ALE
P4.0/DDC_SDA
P4.1/DDC_SCL
P4.2/DDC_VSYNC
P4.3/PWM0
P4.4/PWM1
P4.5/PWM2
P4.6/PWM3
P4.7/PWM4
P3.0/RXD
P3.1/TXD
P3.2/EXINT0
P3.3/EXINT1
P3.4/T0
P3.5/T1
P3.6/SDA2
P3.7/SCL2
P2.0, A8
P2.1, A9
P2.2, A10
P2.3, A11
P1.0/T2
P1.1/T2EX
P1.2/RXD1
P1.3/TXD1
P1.4/ADC0
P1.5/ADC1
P1.6/ADC2
P1.7/ADC3
P0.0, AD0
P0.1, AD1
P0.2, AD2
P0.3, AD3
P0.4, AD4
P0.5, AD5
P0.6, AD6
P0.7, AD7
R10
2.2k
U2
OUT
VDD
GND
STM809MWX6(8ABx)
#RST
#RD
#WR
ALE
CPLD A[0..3]
CPLD D[0..3]
CPLD A0
CPLD A1
CPLD A2
CPLD A3
CPLD D0
CPLD D1
CPLD D2
CPLD D3
uPSD RXD Car
uPSD TXD Car
#CAN INT
PWM/VPW RX
Ex 900
EX CK1
CPLD CK
RP3
4.7k
EX CK2
L Ctrl
uPSD RXD PC
uPSD TXD PC
ADC In
#Out Inhibit
PWM/VPW TX
D[0..7]
A[0..15]

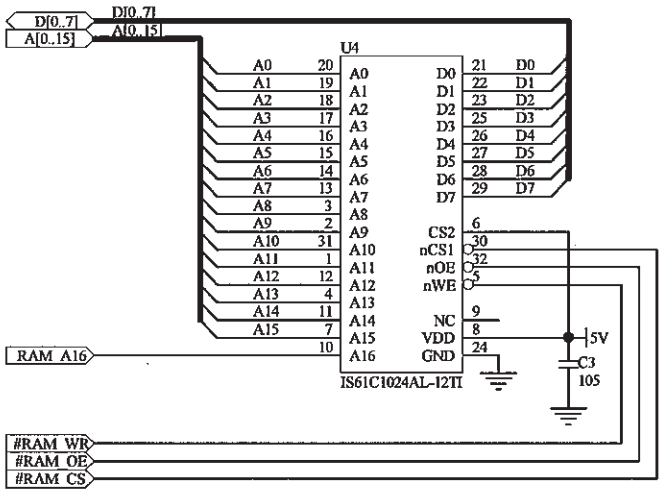
D[0..7]
A[0..15]
D[0..7]
A[0..15]
U4
A0 20
A1 19
A2 18
A3 17
A4 16
A5 15
A6 14
A7 13
A8 3
A9 2
A10 31
A11 1
A12 12
A13 4
A14 11
A15 7
10
A0
A1
A2
A3
A4
A5
A6
A7
A8
A9
A10
A11
A12
A13
A14
A15
A16
D0 21 D0
D1 22 D1
D2 23 D2
D3 25 D3
D4 26 D4
D5 27 D5
D6 28 D6
D7 29 D7
CS2 6
nCS1 30
nOE 32
nWE 5
NC 9
VDD 8
GND 24
5V
C3
105
IS61C1024AL-12TI
RAM_A16
#RAM_WR
#RAM_OE
#RAM_CS

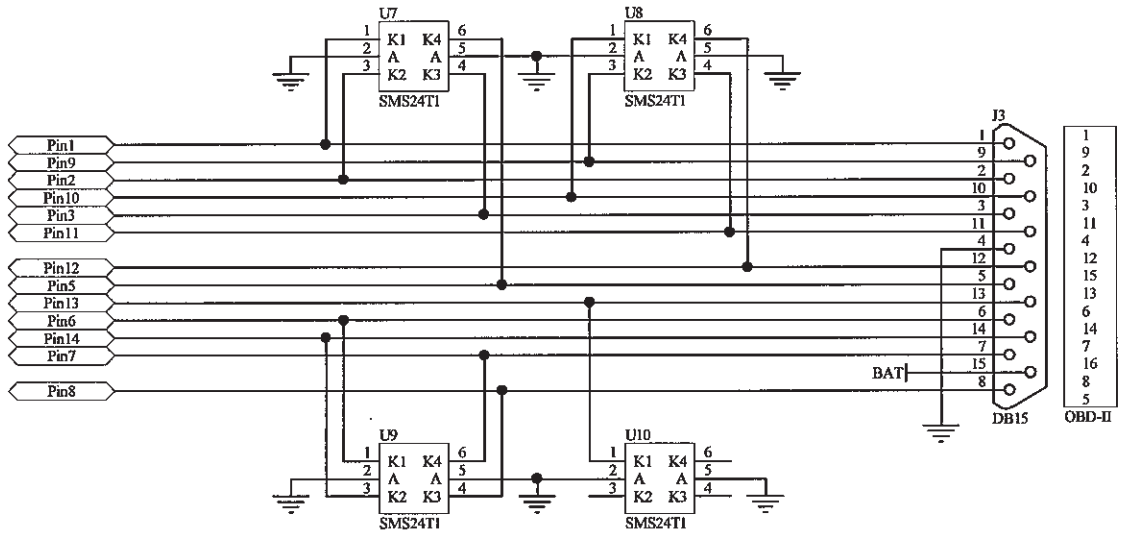
U7
U8
U9
U10
K1 K4
A A
K2 K3
SMS24T1
J3
DB15
OBD-II
BAT
Pin1
Pin9
Pin2
Pin10
Pin3
Pin11
Pin12
Pin5
Pin13
Pin6
Pin14
Pin7
Pin8

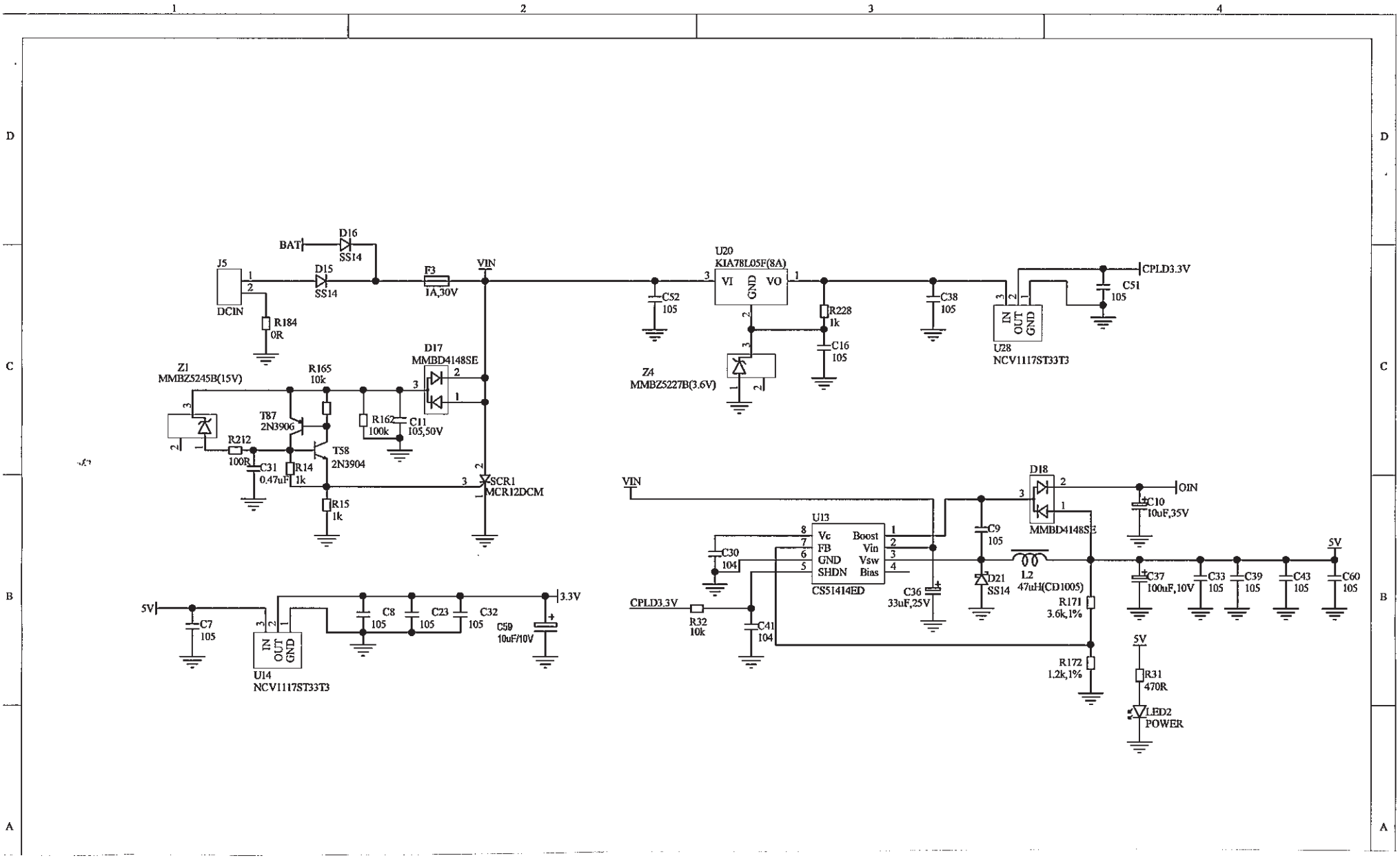
BAT
D16
SS14
J5
DCIN
D15
SS14
R184
0R
F3
1A,30V
VIN
U20
KIA78L05F(8A)
VI
GND
VO
C52
105
R228
1k
C16
105
Z4
MMBZ5227B(3.6V)
C38
105
CPLD3.3V
C51
105
IN
OUT
GND
U28
NCV1117ST33T3
Z1
MMBZ5245B(15V)
R165
10k
D17
MMBD4148SE
T87
2N3906
R162
100k
C11
105,50V
R212
100R
C31
0.47uF
R14
1k
T58
2N3904
SCR1
MCR12DCM
R15
1k
VIN
U13
Vc
FB
GND
SHDN
Boost
Vin
Vsw
Bias
CS51414ED
C30
104
CPLD3.3V
R32
10k
C41
104
C9
105
C36
33uF,25V
D21
SS14
L2
47uH(CD1005)
D18
MMBD4148SE
OIN
C10
10uF,35V
R171
3.6k,1%
R172
1.2k,1%
5V
R31
470R
LED2
POWER
C37
100uF,10V
C33
105
C39
105
C43
105
C60
105
5V
C7
105
IN
OUT
GND
U14
NCV1117ST33T3
C8
105
C23
105
C32
105
C59
10uF/10V
3.3V

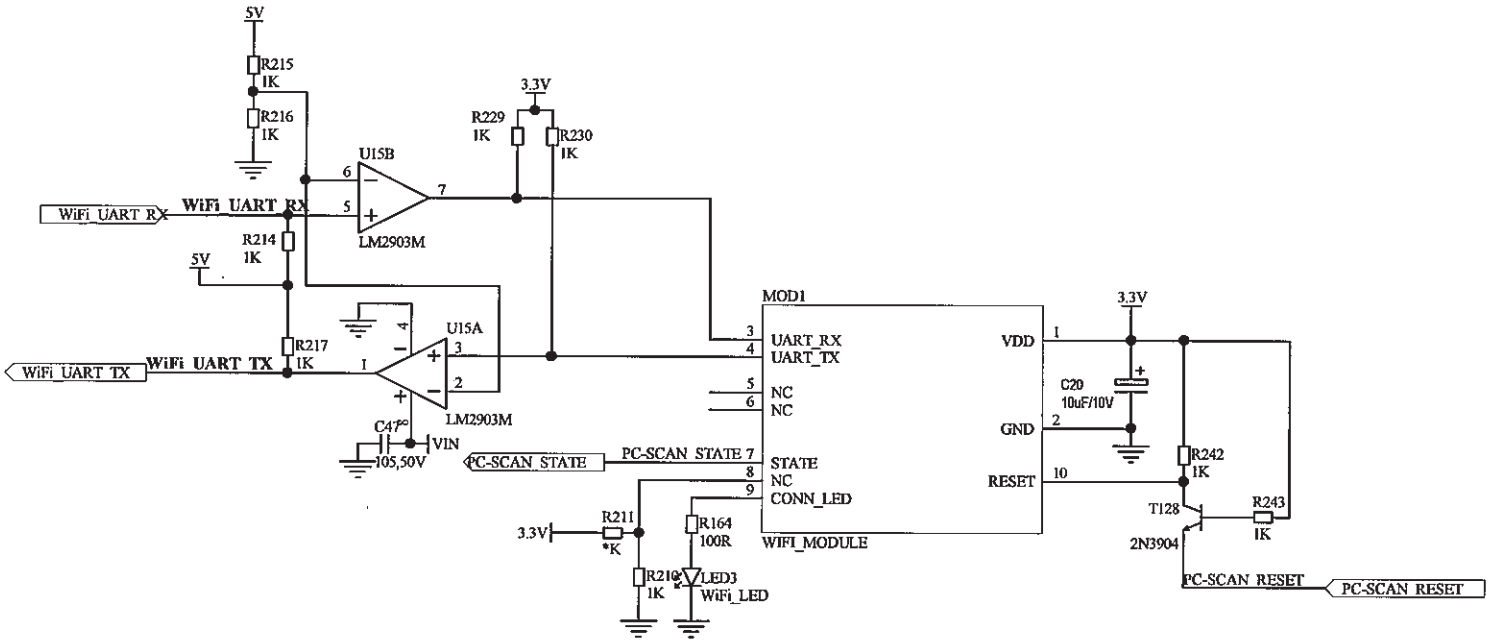
5V
R215
1K
R216
1K
3.3V
R229
1K
R230
1K
U15B
6
7
5
WiFi_UART_RX
WiFi_UART_RX
LM2903M
R214
1K
5V
U15A
4
3
2
1
R217
1K
WiFi_UART_TX
WiFi_UART_TX
LM2903M
C47
105,50V
VIN
PC-SCAN_STATE
PC-SCAN_STATE 7
MOD1
3
4
UART_RX
UART_TX
5
6
NC
NC
STATE
8
NC
9
CONN_LED
WIFI_MODULE
VDD
1
GND
2
RESET
10
3.3V
C20
10uF/10V
R242
1K
T128
2N3904
R243
1K
PC-SCAN_RESET
PC-SCAN_RESET
3.3V
R211
*K
R164
100R
R210
1K
LED3
WiFi_LED

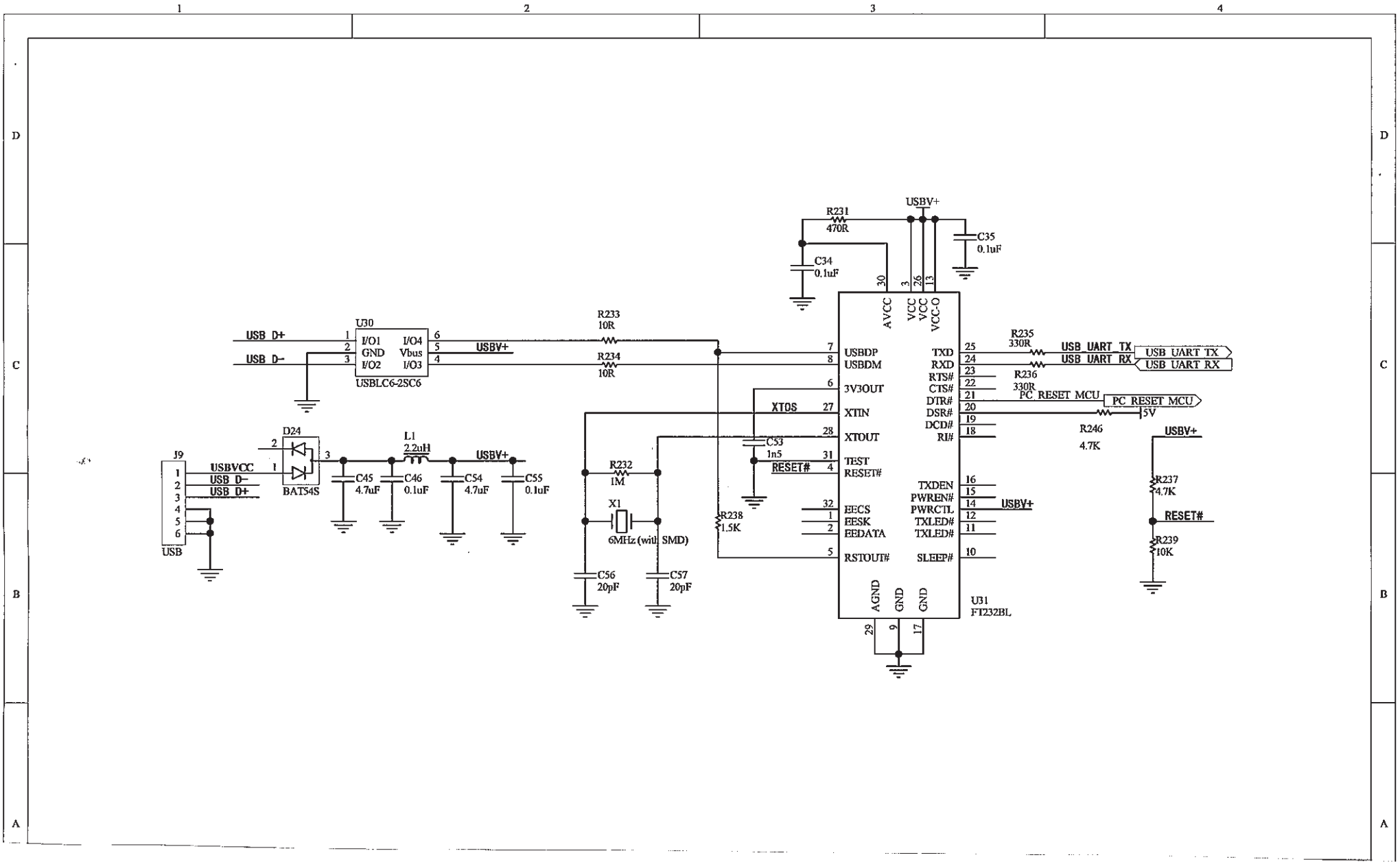
USB D+
USB D-
U30
I/O1
GND
I/O2
I/O4
Vbus
I/O3
USBLC6-2SC6
USBV+
R233
10R
R234
10R
R231
470R
C34
0.1uF
C35
0.1uF
AVCC
VCC
VCC
VCC-O
USBDP
USBDM
3V3OUT
XTOS
XTIN
XTOUT
TEST
RESET#
EECS
EESK
EEDATA
RSTOUT#
TXD
RXD
RTS#
CTS#
DTR#
DSR#
DCD#
RI#
TXDEN
PWREN#
PWRCTL
TXLED#
TXLED#
SLEEP#
AGND
GND
GND
U31
FT232BL
R235
330R
USB UART TX
USB UART RX
R236
330R
PC RESET MCU
5V
R246
4.7K
R237
4.7K
RESET#
R239
10K
C53
1n5
R232
1M
X1
6MHz (with SMD)
C56
20pF
C57
20pF
R238
1.5K
J9
USBVCC
USB D-
USB D+
USB
D24
BAT54S
L1
2.2uH
C45
4.7uF
C46
0.1uF
C54
4.7uF
C55
0.1uF