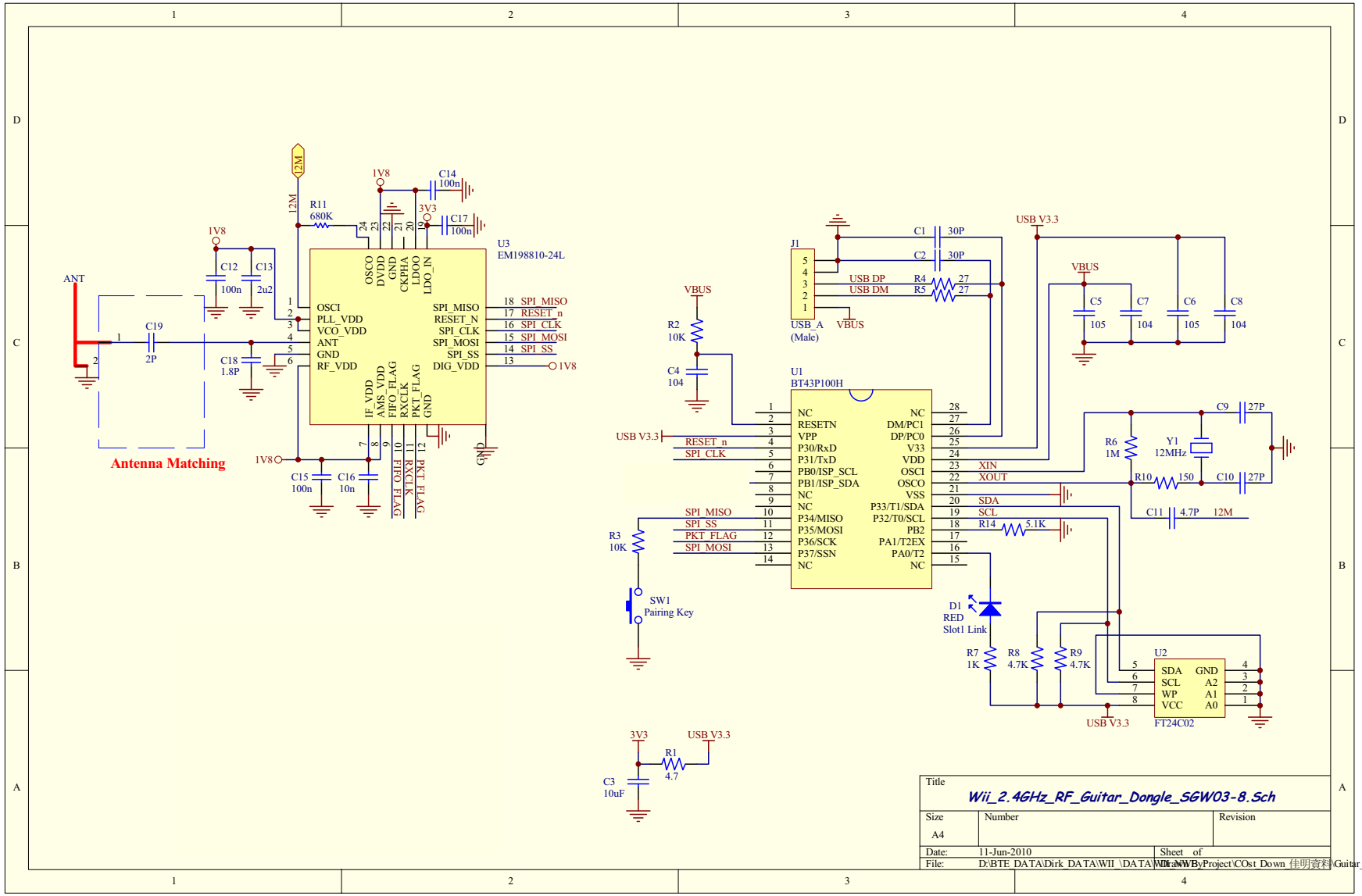

Title: Wii_2.4GHz_RF_Guitar_Dongle_SGW03-8.Sch

Size	Number	Revision
A4		

Date: 11-Jun-2010 Sheet of

File: D:\BTE_DATA\Dirk_DATA\WII_\DATA\WDrawBy\Project\COst_Down_佳明資料\Guitar_資料\2G4_Guitar_dongle\Wii_2.4G