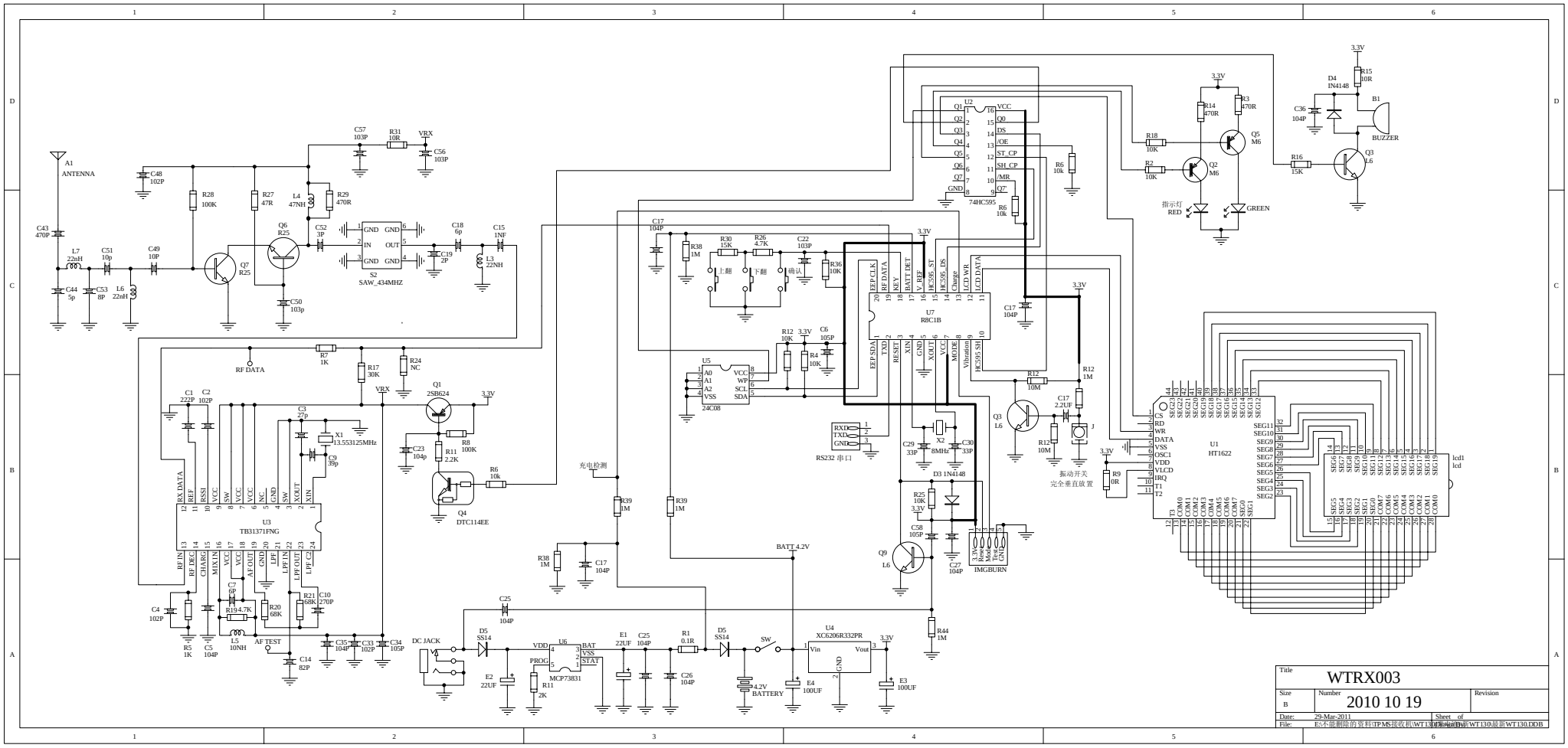
A1
ANTENNA
C43
470P
L7
22nH
C51
10p
C49
10P
C44
5p
C53
8P
L6
22nH
C48
102P
R28
100K
R27
47R
L4
47NH
R29
470R
Q6
R25
Q7
R25
C52
3P
C50
103p
C57
103P
R31
10R
VRX
C56
103P
S2
SAW_434MHZ
C18
6p
C19
2P
C15
1NF
L3
22NH
RF DATA
R7
1K
R17
30K
R24
NC
C1
22P
C2
102P
C3
27p
X1
13.553125MHz
C9
39p
C23
104p
Q1
2SB624
3.3V
R8
100K
R11
2.2K
Q4
DTC114EE
R6
10k
U3
TB31371FNG
RX DATA
REF
RSSI
VCC
SW
VCC
VCC
NC
GND
SW
XOUT
XIN
RF IN
RF DEC
CHARG
MIX IN
VCC
VCC
AF OUT
GND
LPF IN
LPF OUT
LPF C2
C7
6P
R19 4.7K
R20
68K
R21
68K
C10
270P
C4
102P
R5
1K
C5
104P
L5
10NH
AF TEST
C14
82P
C35
104P
C33
102P
C34
105P
DC JACK
D5
SS14
E2
22UF
VDD
U6
MCP73831
BAT
VSS
STAT
PROG
R11
2K
E1
22UF
C25
104P
R1
0.1R
C26
104P
D5
SS14
SW
4.2V
BATTERY
BATT 4.2V
E4
100UF
U4
XC6206R332PR
Vin
Vout
GND
3.3V
E3
100UF
C25
104P
充电检测
R39
1M
R39
1M
R38
1M
C17
104P
C17
104P
R38
1M
R30
15K
R26
4.7K
C22
103P
上翻
下翻
确认
R36
10K
R12
10K
3.3V
C6
105P
R4
10K
U5
24C08
A0
A1
A2
VSS
VCC
WP
SCL
SDA
RXD
TXD
GND
RS232 串口
U7
R8C1B
EEP CLK
RF DATA
KEY
BATT DET
V_REF
HC595_ST
HC595_DS
Charge
LCD WR
LCD DATA
EEP SDA
TXD
RESET
XIN
GND
XOUT
VCC
MODE
Vibration
HC595 SH
C29
33P
X2
8MHz
C30
33P
D3 1N4148
R25
10K
3.3V
C58
105P
Q9
L6
C27
104P
R44
1M
3.3V
Reset
Mode
Tx
GND
IMGBURN
U2
74HC595
Q1
Q2
Q3
Q4
Q5
Q6
Q7
GND
VCC
Q0
DS
OE
ST_CP
SH_CP
MR
Q7'
R6
10k
R6
10k
R18
10K
R2
10K
R14
470R
R3
470R
Q2
M6
Q5
M6
指示灯
RED
GREEN
3.3V
R15
10R
D4
1N4148
C36
104P
B1
BUZZER
R16
15K
Q3
L6
R12
10M
C17
2.2UF
R12
1M
Q3
L6
R12
10M
J
振动开关
完全垂直放置
3.3V
R9
0R
U1
HT1622
CS
RD
WR
DATA
VSS
OSC1
VDD
VLCD
IRQ
T1
T2
SEG22
SEG23
SEG24
SEG25
SEG26
SEG27
SEG28
SEG29
SEG30
SEG31
SEG32
SEG33
SEG34
SEG35
SEG36
SEG37
SEG38
SEG39
SEG40
SEG41
SEG42
SEG43
SEG44
SEG1
SEG2
SEG3
SEG4
SEG5
SEG6
SEG7
SEG8
SEG9
SEG10
SEG11
SEG12
SEG13
SEG14
SEG15
SEG16
SEG17
SEG18
SEG19
COM0
COM1
COM2
COM3
COM4
COM5
COM6
COM7
lcd1
lcd
Title
WTRX003
Size
B
Number
2010 10 19
Revision
Date: 29-Mar-2011
Sheet of
File: E:\不能删除的资料\TPMS接收机\WT130\最新WT130.DDB