Hytera

User Manual

PT350

Hytera
is the trademark or registered trademark of Hytera Communications Corporation Limited.
© 2019 Hytera Communications Corporation Limited. All Rights Reserved.
Address: Hytera Tower, Hi-Tech Industrial Park North, 9108# Beihuan Road, Nanshan District, Shenzhen, People's Republic of China
Postcode: 518057
http:// www.hytera.com

Preface

Welcome to the world of Hytera and thank you for purchasing this product. This manual includes a description of the functions and step-by-step procedures for use.

To avoid bodily injury or property loss caused by incorrect operation, please carefully read the Safety Information Booklet before use.

This manual is applicable to the following product:

PT350 Portable Terminal

Copyright Information

Hytera is the trademark or registered trademark of Hytera Communications Corporation Limited (the Company) in the People's Republic of China (PRC) and/or other countries or areas. The Company retains the ownership of its trademarks and product names. All other trademarks and/or product names that may be used in this manual are properties of their respective owners.

The product described in this manual may include the Company's computer programs stored in memory or other media. Laws in PRC and/or other countries or areas protect the exclusive rights of the Company with respect to its computer programs. The purchase of this product shall not be deemed to grant, either directly or by implication, any rights to the purchaser regarding the Company's computer programs. The Company's computer programs may not be copied, modified, distributed, decompiled, or reverse-engineered in any manner without the prior written consent of the Company.

Disclaimer

The Company endeavors to achieve the accuracy and completeness of this manual, but no warranty of accuracy or reliability is given. All the specifications and designs are subject to change without notice due to continuous technological development. No part of this manual may be copied, modified, translated, or distributed in any manner without the prior written consent of the Company.

We do not guarantee, for any particular purpose, the accuracy, validity, timeliness, legitimacy or completeness of the third-party products and contents involved in this manual.

If you have any suggestions or would like to receive more information, please visit our website at: http://www.hytera.com.

FCC Statement

This equipment has been tested and found to comply with the limits for a Class B digital device, pursuant to part 15 of FCC Rules. These limits are designed to provide reasonable protection against harmful interference in a residential installation. This equipment generates and can radiate radio frequency energy. If not installed and used in accordance with the instructions, it may cause harmful interference to radio communications. However, there is no guarantee that interference will not occur in a particular installation. Verification of harmful interference by this equipment to radio or television reception can be determined by turning it off and then on. The user is encouraged to try to correct the interference by one or more of the following measures:

- Reorient or relocate the receiving antenna. Increase the separation between the equipment and receiver.
- Connect the equipment into an outlet on a different circuit to that of the receiver's outlet.
- Consult the dealer or an experienced radio/TV technician for help.

Operation is subject to the following two conditions:

- This device may not cause harmful interference.
- This device must accept any interference received, including interference that may cause undesired operation.

Note: Changes or modifications to this unit not expressly approved by the party responsible for compliance could void the user's authority to operate the equipment.

Compliance with RF Exposure Standards

The radio complies with the following RF energy exposure standards and guidelines:

- United States Federal Communications Commission, Code of Federal Regulations; 47 CFR § 1.1307, 1.1310 and 2.1093
- American National Standards Institute (ANSI)/Institute of Electrical and Electronic Engineers (IEEE) C95. 1:2005; Canada RSS102 Issue 5 March 2015
- Institute of Electrical and Electronic Engineers (IEEE) C95.1:2005 Edition

RF Exposure Compliance and Control Guidelines and Operating Instructions

To control your exposure and ensure compliance with the occupational/controlled environmental exposure limits, always adhere to the following procedures.

Guidelines:

- Do not remove the RF Exposure Label from the device.
- User awareness instructions should accompany device when transferred to other users.
- Do not use this device if the operational requirements described herein are not met.

Operating Instructions:

- Transmit no more than the rated duty factor of 50% of the time. To transmit (talk), press the Push-to-Talk (PTT) key. To receive calls, release the PTT key. Transmitting 50% of the time, or less, is important because the radio generates measurable RF energy only when transmitting (in terms of measuring for standards compliance).
- Keep the radio unit at least 2.5 cm away from the face. Keeping the radio at the proper distance is important as RF exposure decreases with distance from the antenna. The antenna should be kept away from the face and eyes.
- When worn on the body, always place the radio in an approved holder, holster, case, or body harness or by use of the correct clip for this product. Use of non-approved accessories may result in exposure levels which exceed the FCC's occupational/controlled environmental RF exposure limits.
- Use of non-approved antennas, batteries, and accessories causes the radio to exceed the FCC RF exposure guidelines.

- Contact your local dealer for the product's optional accessories.

ISEDC Statement

The device has been tested and complies with SAR limits, users can obtain Canadian information on RF exposure and compliance

Après examen de ce matériel aux conformité aux limites DAS et/ou aux limites d’intensité de champ RF, les utilisateurs peuvent sur l’exposition aux radiofréquences et la conformité and compliance d’acquérir les informations correspondantes

This device complies with Innovation, Science and Economic Development Canada Compliance license-exempt RSS standard(s). Operation is subject to the following two conditions:

- This device may not cause harmful interference.
- This device must accept any interference received, including interference that may cause undesired operation.

Le présent appareil est conforme aux CNR d'Industrie Canada applicables aux appareils radio exempts de licence. L'exploitation est autorisée aux deux conditions suivantes: (1) l'appareil ne doit pas produire de brouillage, et (2) l'utilisateur de l'appareil doit accepter tout brouillage radioélectrique subi, même si le brouillage est susceptible d'en compromettre le fonctionnement

Pour controler l'exposition et s'assurer de la conformité avec les limites d'exposition professionnelle / environnement controlé, toujours respecter les procédures suivantes.

Lignes directrices:

Ne pas enlever l'étiquette de l'appareil d'exposition aux radiofréquences. Sensibilisation des utilisateurs instructions devraient accompagner dispositif lorsque transférés à d'autres utilisateurs.

Ne pas utiliser cet appareil si les exigences opérationnelles décrites ci - après ne sont pas remplies.

Les instructions de fonctionnement:

Transmettre non plus que le facteur d'utilisation nominal de 50% du temps.à transmettre (parler), pousse le pousse à parler (ptt). Pour recevoir des appels, les ptt.50% du temps de transmission, ou moins, est important parce que que la radio génère de l'énergie rf seulement lors de la transmission des (en termes de mesure de la conformité aux normes). le groupe de la radio continue d'au moins 2,5 cm de la surface.garde la radio à la bonne distance est important, car l'exposition aux champs rf diminue avec la distance de l'antenne.l'antenne doit se tenir loin du visage et des yeux.

Quand portés sur le corps, toujours place de la radio dans un étui, hytera approuvé titulaire, ou un harnais ou par l'utilisation de la vidéo pour ce produit.utilisation des accessoires non approuvés peuvent entrainer des fac qui dépassent les niveaux d'exposition professionnelle et environnementale controlée des limites d'exposition aux rf.

Non approuvé des antennes, les piles et les accessoires causes la radio à dépasser les lignes directrices sur l'exposition aux radiofréquences de fac. Communiquez avec votre distributeur local pour les accessoires facultatifs du produit.

EU Regulatory Conformance

As certified by the qualified laboratory, the product is in compliance with the essential requirements and other relevant provisions of 2014/53/EU.

Please note that the above information is applicable to EU countries only.

Contents

Documentation Conventions **5**
1. Packaging List **6**
2. Product Overview **7**
2.1 Product Layout 7
2.2 Programmable Keys 8
3. Before Use **10**
3.1 Charging the Battery 10
3.2 Attaching the Battery 10
3.3 Attaching the Antenna 11
3.4 Attaching the Belt Clip 11
3.5 Attaching the Audio Accessory 12
4. Basic Operations **13**
4.1 Turning the Terminal On or Off 13
4.1.1 Turning the Terminal On 13
4.1.2 Turning the Terminal Off 13
4.2 Adjusting the Volume 13
4.3 Locking or Unlocking the Keypad 13
4.4 Switching the Operation Mode 13
4.5 Managing the PhoneBook 14
4.5.1 Viewing Contact Information 14
4.5.2 Deleting a Contact or All Contacts 14
4.5.3 Deleting a Number Type 14
4.5.4 Checking Space 14
4.6 Viewing Device Information 15
5. Status Indications **16**
5.1 LCD Icons 16
5.1.1 Basic Status Icons 16
5.1.2 Short Data and Call Icons 16
5.1.3 Accessory Icons 17
5.2 LED Indicator 17
5.2.1 Battery Status Indicator 17
5.2.2 Operation Status Indicator 18
6. Call Services **19**
6.1 Group Call 19
6.1.1 Initiating a Group Call 19
6.1.2 Receiving a Group Call 19
6.1.3 Ending a Group Call 19
6.2 Individual Call 19

6.2.1 Initiating an Individual Call 20
6.2.2 Receiving an Individual Call 20
6.2.3 Ending an Individual Call 21
6.3 All Call 21
6.4 PABX/PSTN Call (TMO Only) 21
6.4.1 Initiating a PABX/PSTN Call 21
6.4.2 Receiving a PABX/PSTN Call 21
6.4.3 Ending a PABX/PSTN Call 21
6.5 Broadcast Call (TMO Only) 21
6.5.1 Initiating a Broadcast Call 22
6.5.2 Receiving a Broadcast Call 22
6.5.3 Ending a Broadcast Call 22
6.6 2nd PTT Call 22
6.6.1 TMO 22
6.6.2 DMO 22
7. Message Services 23
7.1 Status Message 23
7.2 Templates 24
7.2.1 Sending a Template 24
7.2.2 Saving as a Template 24
7.3 Flash Message 24
7.3.1 Sending a Flash Message 24
7.3.2 Forwarding a Flash Message 24
8. General Features 26
8.1 Terminal Settings 28
8.1.1 Basic Settings 28
8.1.2 Favorite Functions 28
8.2 Network setting 29
8.3 Audio Setting 29
8.3.1 Audio Profile 29
8.3.2 Multi Audio 30
8.4 VOX 30
8.4.1 Enabling the VOX Feature 30
8.4.2 Setting the Threshold 31
8.4.3 Selecting a Microphone 31
8.5 Talkgroup 31
8.5.1 Folder Type 31
8.5.2 Talkgroup Type 32
8.5.3 Setting the Selected Folder 33
8.5.4 Setting the Default Group 33

8.5.5 Setting the 2nd PTT Group 33
8.5.6 Managing a Normal Folder 34
8.5.7 Managing a Favorite Folder 34
8.5.8 Managing a Scan List 34
8.6 DGNA 35
8.7 Voice Feedback 35
8.8 Power 35
8.9 Work Type 36
8.10 Energy Saving Mode 36
8.11 Group Call Detector 37
8.12 Positioning 37
8.12.1 Viewing Position 37
8.12.2 Updating Time 37
8.12.3 Sending Position Messages 38
8.12.4 Setting the Positioning Feature 38
8.12.5 Uploading Position Data 38
8.13 BT 38
8.13.1 Enabling the BT Feature 39
8.13.2 Connecting to a BT Device 39
8.13.3 Setting Visibility 39
8.14 Emergency Call 39
8.14.1 Initiating an Emergency Call 40
8.14.2 Answering an Emergency Call 40
8.14.3 Ending an Emergency Call 40
8.14.4 Emergency Call Type in DMO 40
8.14.5 Emergency Cycle 40
8.14.6 Emergency Status Message 41
8.15 Security 41
8.15.1 Overspeed Alarm 41
8.15.2 TxI 41
8.15.3 Covert Mode 41
8.15.4 Man Down 42
8.15.5 Lone Worker 42
8.15.6 Temporary Disable, Permanent Disable, and Enable 42
8.15.7 Delete Security Data Urgently 42
9. Troubleshooting 44
10. Product Cleaning 46
10.1 Product Care 46
10.2 Product Cleaning 46
11. Optional Accessories 47

12. Abbreviations 48

Documentation Conventions

Icon Conventions

Icon	Description
NOTE	Indicates references that can further describe the related topics.
CAUTION	Indicates situations that could cause data loss or equipment damage.
DANGER	Indicates situations that could cause major personal injury or even death.

Notation Conventions

Item	Description	Example
Boldface	Denotes menus, tabs, parameter names, window names, dialogue names, and hardware buttons.	To save the configuration, click **Apply**.
		The **Log Level Settings** dialogue box appears.
		Press the **PTT** key.
" "	Denotes messages, directories, file names, folder names, and parameter values.	The screen displays "Invalid Battery!".
		Open "PDT_PSS.exe".
		Go to "D:/opt/local".
		In the Port text box, enter "22".
>	Directs you to access a multi-level menu.	Go to **File** > **New**.
Italic	Denotes document titles.	For details about using the DWS, refer to *Dispatch Workstation User Guide*.
`Courier New`	Denotes commands and their execution results.	To set the IP address, run the following command: `vos-cmd - m name IP`

1. Packaging List

Please unpack carefully and check that you have received the following items. If any item is missing or damaged, contact your dealer.

Item	Quantity (PCS)	Item	Quantity (PCS)
Terminal	1	Antenna	1
Battery	1	Belt Clip	1
Charger	1	Documentation Kit	1
Power Adapter	1	/	/

NOTE

- Figures in this manual are for reference only.
- Check whether the frequency band marked on the antenna label matches that on the terminal label. If not, contact your dealer.

2. Product Overview

2.1 Product Layout

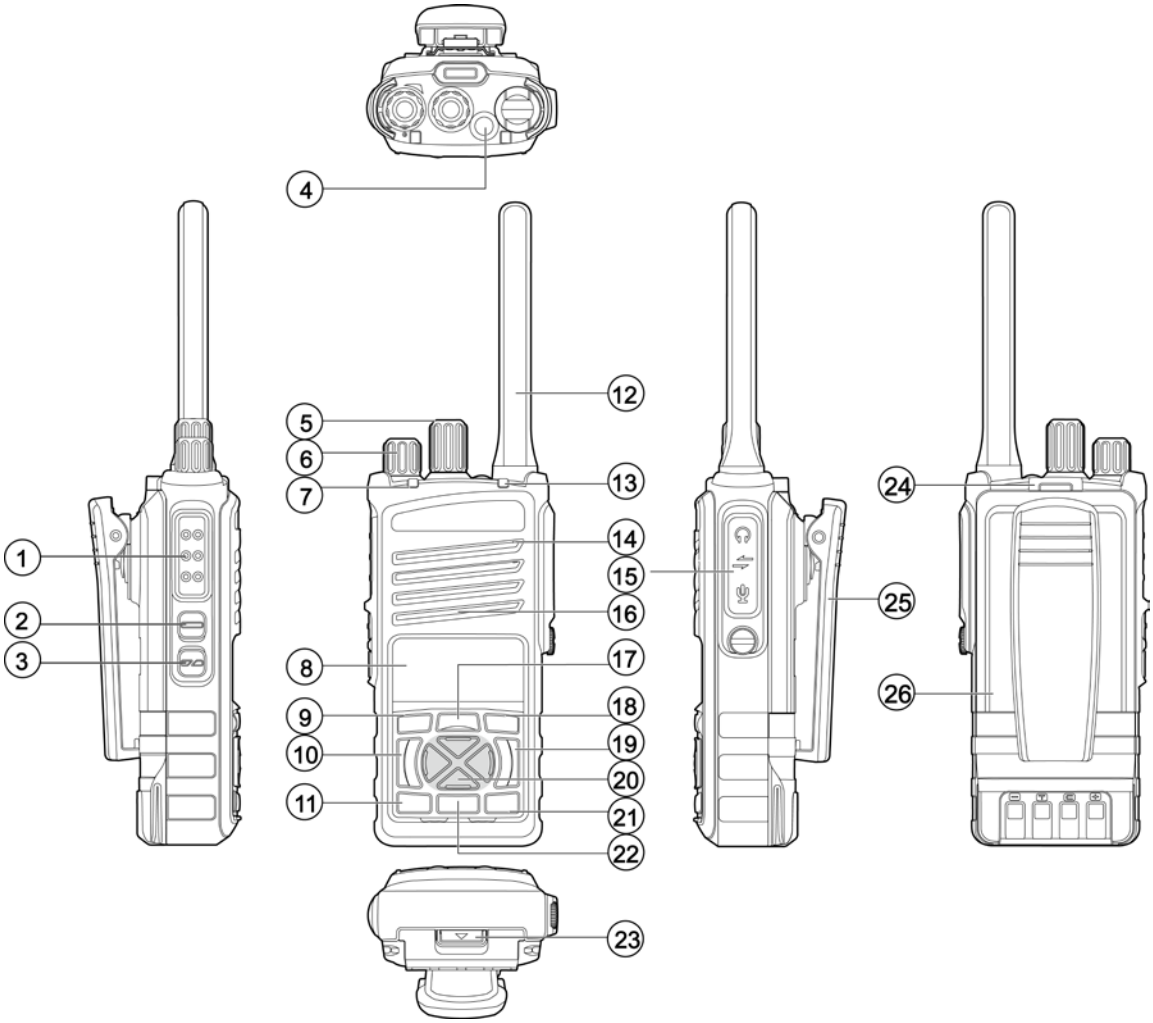

No.	Part Name	No.	Part Name
1	Push-to-Talk (PTT) Key	14	Build-in Microphone
2	Side Key 1 (SK1)	15	Accessory Connector Cover
3	Side Key 2 (SK2)	16	Speaker
4	Emergency Key	17	Menu Key
5	Group Selector Knob	18	Cancel/Back Key
6	Volume Control Knob	19	Power On-Off/End Key
7	Operation Status Indicator	20	Navigation Keys (Up, Down, Left, and Right)
8	OLED Display	21	P3 Key
9	OK Key	22	P2 Key

No.	Part Name	No.	Part Name
10	Answer/Call Key	23	Battery Latch
11	P1 Key	24	Strap Hole
12	Antenna	25	Belt Clip
13	Battery Status Indicator	26	Battery

2.2 Programmable Keys

For enhanced convenience, you can set the following keys as shortcuts to assignable terminal features: **Up** key, **Down** key, **Answer/Call** Key, **SK1**, **SK2**, **P1** key, **P2** key, and **P3** key.

To set or cancel a shortcut, on the home screen, press the **Menu** key, and then go to **Settings** > **Radio** > **Keypad** > **Shortcuts**.

3. Before Use

3.1 Charging the Battery

CAUTION

- Use the approved charger to charge the battery.
- Read the *Safety Information Booklet* before charging.
- The remaining lithium-ion battery power is limited to 30% pursuant to the new lithium battery shipment regulation approved by International Air Transport Association (IATA). Before initial use, charge the battery.

Before initial use, make sure to charge the battery. You can charge either the standalone battery or the terminal with battery attached. It is recommended that the terminal remain powered off during charging.

The LED indicator on the charger shows the charging status, as described in the following table:

Indicator	Charging Status
Glows red	The battery is being charged.
Glows orange	The battery is charged to 90% or above.
Glows green	The battery is fully charged.
Flashes red rapidly	The battery fails to be charged.
Flashes red slowly	No battery is placed on the charger.

3.2 Attaching the Battery

CAUTION

- Use the approved battery to avoid explosion during battery replacement.
- Dispose of the used battery according to "Precautions for Disposal" in the *Safety Information Booklet*.

Insert the tabs at the battery’s top part into the slots at the terminal’s top part, and then press the battery latch and push the battery into the terminal until a click is heard.

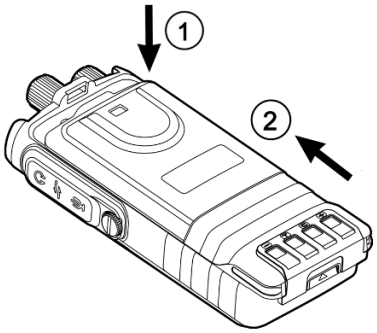

3.3 Attaching the Antenna

CAUTION

Do not hold the terminal by the antenna and swing it. This may affect the antenna performance and shorten the life span of the antenna.

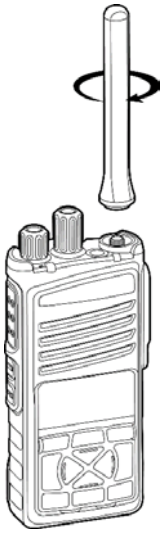

3.4 Attaching the Belt Clip

1. Make sure the arc end of the metal rotating component of the belt clip is vertical to the ground.
2. Insert the component into the fastener of the terminal's rear cover until a click is heard.

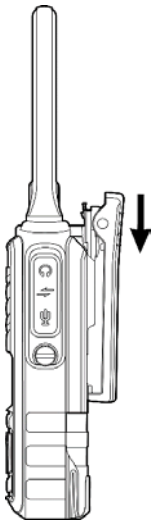

3.5 Attaching the Audio Accessory

CAUTION

To avoid short circuit or corrosion, close the accessory connector cover and fasten the screw after removing the accessory.

1. Loosen the screw on the accessory connector cover, and then open the cover.

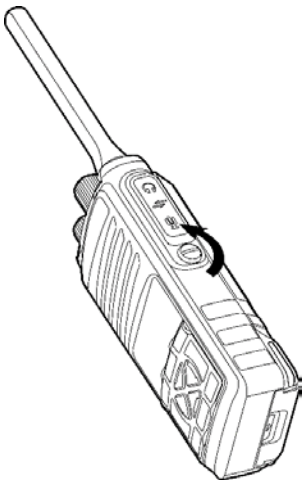

2. Plug the accessory into the accessory connector, and then rotate the screw on the accessory plug clockwise until hand tight.

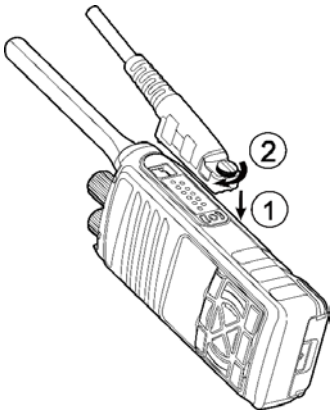

4. Basic Operations

4.1 Turning the Terminal On or Off

4.1.1 Turning the Terminal On

1. Long press for two seconds.
2. Press the **Emergency** key.
3. If configured, the terminal automatically starts up when you attach the battery.

4.1.2 Turning the Terminal Off

1. Long press for 2 seconds.
2. When the OLED display shows "Power off?", press the **OK** key.

4.2 Adjusting the Volume

To increase the volume, rotate the **Volume Control Knob** clockwise.

To decrease the volume, rotate the **Volume Control Knob** anticlockwise.

4.3 Locking or Unlocking the Keypad

When the keypad is not in use, it is recommended that you lock it to avoid unintended operations.

- Auto Lock

  On the home screen, press the **Menu** key, go to **Settings** > **Radio** > **Keypad** > **Auto Lock**, and then select **On**.

  With the Auto Lock feature enabled, if no operation is made or no call or message is received within the preset time, the keypad will be locked automatically.

- Manual Lock or Unlock

  On the home screen, press the **OK** key and then the **P1** key.

4.4 Switching the Operation Mode

The terminal can operate in DMO or TMO.

- Manual Switch
  - On the home screen, press the **Menu** key, go to **Mode**, and then select the mode.
  - On the home screen, press the **OK** key, go to **Mode**, and then select the mode.
  - Press the preprogrammed **TMO&DMO Switch** key.
- Auto Switch

The Auto Mode Switch feature allows the terminal to switch the operation mode automatically, so as to guarantee the normal communication of the terminals in no-signal coverage areas or when the system fails.

If the Auto Mode Switch feature is programmed, you can enable it as follows:

On the home scree, press the **Menu** key, go to **Settings** > **Function** > **Auto Mode Switch**, and then select **On**.

4.5 Managing the PhoneBook

You can save private, PABX, and PSTN numbers to the PhoneBook, and view or call contacts in the PhoneBook. If configured, you can also delete contacts in the PhoneBook and check the space of the PhoneBook.

4.5.1 Viewing Contact Information

1. On the home screen, press the **Menu** key, and then go to **PhoneBook**.
2. Select the contact, and then press the **OK** Key.

   The name, number, and number type of the contact are displayed on the screen.
3. (Optional) To switch the number type of the contact, press the **Left** or **Right** key.

4.5.2 Deleting a Contact or All Contacts

1. On the home screen, press the **Menu** key, and then go to **PhoneBook**.
2. Do one of the following:
   - To delete a specified contact, select the contact, press the **Menu** key, select **Delete**, and then confirm the deletion.
   - To delete all contacts, press the **Menu** key, select **Delete All**, and then confirm the deletion.

4.5.3 Deleting a Number Type

A contact can be configured with seven number types.

To delete a number type, do as follows:

1. On the home screen, press the **Menu** key, and then go to **PhoneBook**.
2. Select the contact and the number type.
3. Press the **Menu** key, select **Delete**, and then confirm the deletion.

4.5.4 Checking Space

1. On the home screen, press the **Menu** key, and then go to **PhoneBook**.
2. Press the **Menu** key.
3. Select **Space**.

The used and free space of the PhoneBook are displayed on the screen.

4.6 Viewing Device Information

On the home screen, press the **Menu** key, and then go to **Settings** > **DeviceInfo**.

The model, version, and ISSI of the device are displayed on the screen.

5. Status Indications

5.1 LCD Icons

5.1.1 Basic Status Icons

Icon	Terminal Status
	The number of bars indicates the power left in the battery.
	The battery is counterfeit.
	The terminal is prohibited from transmitting due to low battery.
	The terminal does not registered with the system in TMO.
	The terminal is registered with the system in TMO, and more bars indicate stronger signal strength.
	In Graceful Service Degradation Mode, the terminal with weak signal strength is able to receive group calls, initiate or receive emergency calls, and send emergency status messages.
	The Silent mode is disabled.
	The Silent mode is enabled.
	A gateway is available and connected in DMO.
	A gateway is available but unconnected in DMO.
	A repeater is available and connected in DMO.
	A repeater is available but unconnected in DMO.
	The terminal is in Fallback mode.
	The Scan feature is enabled in TMO.
	The Scan feature is enabled in Fallback mode.
	The keypad is locked.
	The terminal is prohibited from transmitting.
	The Voice Operated Transmit (VOX) feature is enabled.

5.1.2 Short Data and Call Icons

Icon	Terminal Status
	There is/are unread Message(s).
	An emergency call is in progress.

Icon	Terminal Status
	A broadcast call is in progress.
	The ongoing call is assigned with a preemptive priority.
	The ongoing call is assigned with a high priority.
	The ongoing call is assigned with a low priority.
	A group call is in progress.
	An individual call is in progress.
	An all call is in progress.

5.1.3 Accessory Icons

Icon	Terminal Status
	A remote speaker microphone is connected.
	An earpiece or a control cable is connected.
	The Positioning feature is enabled, and valid GPS data has been received.
	The Positioning feature is enabled, but no valid GPS data has been received.
	A BT accessory is connected and available.
	The BT feature is enabled, but no BT accessory is connected.
	A BT accessory is connected but unavailable.

5.2 LED Indicator

5.2.1 Battery Status Indicator

Indicator	Terminal Status
Glows green	The terminal is being turned on.
Flashes red slowly	The terminal is under low-voltage protection. (The default lower-voltage quantity is lower than 10%, which can be configured.)
Glows orange	● The terminal is being upgraded. ● The battery is counterfeit.
Flashes orange slowly	The battery power is above the low battery threshold and below or equal to 80%.
Flashes green slowly	The battery power is above 80%.

5.2.2 Operation Status Indicator

Indicator	Terminal Status
Glows green	The terminal is receiving.
Flashes green slowly	The terminal is standby in TMO.
Glows red	The terminal is transmitting.
Flashes red rapidly	The terminal is out of service in TMO.
Glows orange	● The channel is busy in DMO. ● The terminal is prohibited from transmitting.
Flashes orange rapidly	The terminal cannot apply for talk rights.
Flashes orange slowly	The terminal is in Fallback mode.
Flashes blue slowly	● The terminal is standby in DMO. ● The BT feature is enabled, but no BT device is connected.
Flashes blue slowly	The BT feature is enabled, and a BT device is connected.

6. Call Services

6.1 Group Call

A group call is a call from an individual user in a group to all the other members in the group.

6.1.1 Initiating a Group Call

- Through the **Group Selector** knob
  1. Rotate the **Group Selector** knob to set a group as the default group.
  2. Press and hold the **PTT** key.
- Through the menu
  1. On the home screen, press the **Cancel/Back** key, or press the **Menu** key and then go to **Group**.
  2. Press the **OK** key, and then select the folder and group.
  3. Press the **Menu** key, and then select **As Default Grp**.
  4. Press and hold the **PTT** key.

6.1.2 Receiving a Group Call

You can listen to an incoming group call without any operation.

If the terminal is configured with the pre-emptive priority, you can press and hold the **PTT** key to interrupt the talking party and speak at any time.

6.1.3 Ending a Group Call

With the permission of the trunking system, the calling party can press to end a group call. The called party can press to exit a group call.

Without the permission of the trunking system, the calling party can press to exit a group call and the called party enters channel reservation state.

> **NOTE**
>
> In TMO, with the Virtual Channel Reservation feature enabled, you can press the PTT key to call back within the preset time after the other party hung up.

6.2 Individual Call

An individual call is a call from an individual user to another individual user.

In TMO, an individual call is a half-duplex call or full-duplex call. In DMO, an individual call is a half-duplex call.

- Half-duplex individual call: The calling party and the called party cannot speak simultaneously.
- Full-duplex individual call: The calling party and the called party can speak simultaneously.

NOTE

You need to connect an audio accessory that supports the duplex feature before initiating or receiving a full-duplex individual call.

6.2.1 Initiating an Individual Call

- Half-duplex Individual Call
  1. On the home screen, press the **Menu** key, and then go to **PhoneBook** or **Call Log** > **Dialed**, **Received**, or **Missed**.
  2. Select the individual contact, and then press and hold the **PTT** key.
- Full-duplex Individual Call
  1. On the home screen, press the **Menu** key, and then go to **PhoneBook** or **Call Log** > **Dialed**, **Received**, or **Missed**.
  2. Select the individual contact, and then press .

NOTE

In TMO, if the One Key Dial feature is programmed, you can press the preprogrammed OneKeyDial key to initiate an individual call to the required contact.

6.2.2 Receiving an Individual Call

TMO

You may receive an individual call with Direct Signaling or Hook Signaling. If you receive a call with Direct Signaling, the call will be set up automatically. If you receive a call with Hook Signaling, you need to press keys to establish the call.

- Half-Duplex Individual Call
  - Call with Direct Signaling: Listen to the call without any operation.
  - Call with Hook Signaling: Press the **PTT** key.
- Full-duplex Individual Call
  - Call with Direct Signaling: Listen to the call without any operation.
  - Call with Hook Signaling: Press or the **PTT** key.

DMO

You can listen to an incoming individual call in DMO without any operation.

The terminal configured with a higher priority or pre-emptive priority can interrupt the call from the terminal with a lower priority.

6.2.3 Ending an Individual Call

An individual call ends when the calling or called party presses .

> **NOTE**
>
> In a half-duplex call in TMO, with the Virtual Channel Reservation feature enabled, you can press the PTT key to call back within the preset time after the other party hung up.

6.3 All Call

- In TMO, an all call is a call from an individual user to all other users in the network.
- In DMO, the terminal can initiate an intra-network all call or inter-network all call. An intra-network all call is a call from an individual user to all other users on the same frequency in the same network; an inter-network all call is a call from an individual user to all other users on the same frequency in different networks

An all call group is a special talkgroup.

For operations of the all call, see 6.1 Group Call.

6.4 PABX/PSTN Call (TMO Only)

A PABX/PSTN call is a call established between an individual user and a PABX or PSTN user outside the TETRA network.

6.4.1 Initiating a PABX/PSTN Call

- Through the menu
  1. On the home screen, press the **Menu** key, go to **PhoneBook**, and then select the PABX or PSTN number.
  2. Press or the **PTT** Key.
- Through the shortcut

  If the One Key Dial feature is programmed, press the preprogrammed **OneKeyDial** key.

6.4.2 Receiving a PABX/PSTN Call

To listen to an incoming PABX/PSTN call, press or the **PTT** key.

During the call, both the calling party and the called party can speak without any operation.

6.4.3 Ending a PABX/PSTN Call

A PABX/PSTN call ends when the calling or called party presses .

6.5 Broadcast Call (TMO Only)

A broadcast call is a special group call during which only the calling party can speak and be heard.

6.5.1 Initiating a Broadcast Call

- Through the menu
  1. On the home screen, press the **Menu** key, go to **Services**, and then select **Broadcast Call**.
  2. Press and hold the **PTT** key.
- Through the shortcut
  1. Press the **Broadcast** key.
  2. Press and hold the **PTT** key.

6.5.2 Receiving a Broadcast Call

You can listen to an incoming broadcast call without any operation.

6.5.3 Ending a Broadcast Call

With the permission of the trunking system, the calling party can press to end a broadcast call. The called party can press to exit a broadcast call.

Without the permission of the trunking system, the calling party can press to exit a broadcast call and the called party enters channel reservation state.

6.6 2nd PTT Call

If **SK1** or **SK2** is preprogrammed as the **Second PTT** key, you can use it to initiate a 2nd PTT call.

6.6.1 TMO

If the terminal is configured with the 2nd PTT group and the **Second PTT** key, press the key to initiate a 2nd PTT call.

If the terminal is only configured with the **Second PTT** key, do as follows:

1. On the home screen, press the **Cancel/Back** key, or press the **Menu** key and then go to **Group**.
2. Press the **OK** key, and then select the folder and group.
3. Press the **Menu** key, and then select **As 2nd PTT Group**.
4. Press the preprogrammed **Second PTT** key.

To receive or end a 2nd PTT call, see 6.1.2 Receiving a Group Call or 6.1.3 Ending a Group Call.

6.6.2 DMO

Press the preprogrammed **Second PTT** key to initiate a 2nd PTT call to the default group.

7. Message Services

You can use the following message services on the terminal.

Items	Operation
Viewing a message	● To view a newly received message on the home screen, press the OK key. ● To view a messages from the Inbox or Outbox, do as follows: 1. On the home screen, press the Menu key, and then go to Message > Inbox or Outbox. 2. Select the message.
Resending a Message	1. On the home screen, press the Menu key, and then go to Message > Outbox. 2. Select the message. 3. Press the Menu key, and then select Resend.
Forwarding a message	1. On the home screen, press the Menu key, and then go to Message > Inbox or Outbox. 2. Select the message. 3. Press the Menu key, and then select Forward. 4. Select the number type and contact.
Deleting a message or all messages	On the home screen, press the Menu key, go to Message > Inbox, Outbox, or Templates, and then do one of the following: ● To delete a message, select the message, press the Menu key, and then select Delete. ● To delete all messages in the folder, press the Menu key, and then select Delete All.
Setting the message services	On the home screen, press the Menu key, and then go to Message > Settings.

7.1 Status Message

A status message is a predefined code that transfers the message content. You can configure the frequently used messages as the status message.

- Through the menu

  1. On the home screen, press the **Menu** key, and then go to **Message** > **Status Msg**.
  2. Select the message.

3. Press the **Menu** key, and then select **Send**.
4. Select the number type and contact.

- Through the shortcut

  If the One Key Status Message feature is programmed, press the **OneKeyStatusMsg** key.

7.2 Templates

A template is a predefined text message that can be sent to the contact

7.2.1 Sending a Template

1. On the home screen, press the **Menu** key, and then go to **Message** > **Templates**.
2. Select the template.
3. Press the **Menu** key.
4. Select the number type and contact.

7.2.2 Saving as a Template

1. On the home screen, press the **Menu** key, and then go to **Message** > **Inbox** or **Outbox**.
2. Select the message.
3. Press the **Menu** key, and then select **Save as Template**.

NOTE

Only the text message shorter than 140 bytes can be saved as a template.

7.3 Flash Message

In TMO, the Flash Message feature allows you to send a message as a flash message, whose content will be displayed on the screen of the receiving terminal immediately. Once the display timer expires, the message content disappears from the screen and an unread message icon appears on the status bar.

7.3.1 Sending a Flash Message

1. On the home screen, press the **Menu** key, and then go to **Message** > **Templates**.
2. Select the message.
3. Press the **Menu** key, and then select **Send Flash**.
4. Select the number type and contact.

7.3.2 Forwarding a Flash Message

1. On the home screen, press the **Menu** key, and then go to **Message** > **Inbox** or **Outbox**.

2. Select the message.

3. Press the **Menu** key, and then select **Forward**.

4. Select the number type and contact.

8. General Features

The features supported by the terminal vary with the operation mode. For details, see the following table.

Feature	DMO	TMO
Display (Keypad Light, Brightness, Indicator, and Invert Display)	√	√
Keypad Lock	√	√
Alert Tone	√	√
Auto Mode Switch	√	√
Voice Feedback	√	√
Audio Profile	√	√
Multi Audio	√	√
VOX	√	√
Group Call	√	√
Half-duplex Call	√	√
Full-duplex Call	×	√
All Call	√	√
Broadcast Call	×	√
PABX/PSTN Call	×	√
One Key Dial	×	√
2nd PTT Call	√	√
Short Message	√	√
Status Message	√	√
Flash Message	×	√
Templates	√	√
Talkgroup	√	√
Folder	√	√
Favorite Folder	√	√
PhoneBook	√	√

Feature	DMO	TMO
Network Switch	×	√
Scan List	×	√
Virtual Channel Reservation	×	√
Call Priority	√	√
Dynamic Group Number Assignment (DGNA)	×	√
Energy Saving Mode	×	√
Work Type	√	×
Power	√	√
Group Call Detector*	×	√
BT	√	√
Positioning	√	√
Position Information	√	√
Update Time	√	√
Send Position Messages	√	√
GPS Report	√	√
Emergency Call	√	√
Emergency Cycle	√	√
Emergency Status Message	×	√
Overspeed Alarm	√	√
Delete Security Data Urgently	√	√
Temporary Disable	×	√
Enable	×	√
Permanent Disable*	×	√
TxI*	√	√
Covert Mode	√	√
Man Down	√	√

Feature	DMO	TMO
Lone Worker	√	√

Features with the asterisk icon (*) are paid features. To use these feature, apply for Licenses from your dealer.

8.1 Terminal Settings

8.1.1 Basic Settings

To configure frequently used features, on the home screen, press the **Menu** key, and then go to **Settings** > **Radio**. For details, see the following table.

Features	Description	Operation
Language	This feature allows you to set the language in which all interface information is displayed.	Go to Language, and then select the required language.
Invert Display	This feature allows the displayed text to be reversed by 180 degrees.	Go to Display > Invert Disp, and then select On or Off.
Brightness	This feature allows you to set the LCD brightness.	Go to Display > Brightness, and then press the left and right navigation keys to adjust the brightness.
Keypad Light	The feature is designed to illuminate the keypad.	Go to Display > Light, and then select On or Off.
Date & Time	This feature allows you to set parameters related to date and time.	● To adjust the date or time, go to Date & Time > Settings, select Date or Time, and then press the navigation keys. ● To set the date or time format, go to Date & Time > Format, select Date Format or Time Format, and then select the format. ● To set the time synchronization method, go to Date & Time > Time Sync, and then select Network Time, Satellite Time, or Out of sync. ● To set the time zone, go to Date & Time > Time Zone, and then press the navigation keys.

8.1.2 Favorite Functions

To switch the mode or profiles through the **Functions** menu, on the home screen, press the **OK** key.

In TMO, you can also switch the network through the **Functions** menu.

You can customize your favorite functions to the terminal.

8.2 Network setting

When the signal strength of the current network is weak or the terminal is out of the coverage of the current network, the terminal will be out of service. To continue using the terminal, you can switch to other available networks.

- Manual Switch
  - In DMO, the network of the default group is the network of the terminal. To switch the network, switch the default group.
  - In TMO, if the terminal is configured with multiple networks, go to **Network** > **MNI List**, and then select the network.
- Auto Switch

  In TMO, if the terminal is configured with multiple networks, go to **Network**, and then select **Auto Switch**. The terminal will automatically switch to another network when it is out of service.

8.3 Audio Setting

8.3.1 Audio Profile

The Audio Profile feature allows the terminal to output clear voice in various environments. This feature is only applicable to the half-duplex call established through the internal speaker and is unchangeable during the call.

The terminal supports audio profiles listed in the following table.

Audio Profile	Application
General	This profile is applicable to the low-noise environment, such as a quiet street.
Quiet	This profile is applicable to the indoor environment which is relatively quiet.
Noise	This profile is applicable to the high-noise environment, such as a road.
Silent	This profile is applicable to the extremely quiet environment. After configuration, the terminal emits no sounds.
Bright Audio	This profile is applicable to the environment with changeable noise level. The terminal automatically adjusts the audio parameters based on the environment for high quality voice.
Howling Suppression	This profile is applicable to the situation when terminal users are near to each other (within one meter).

Audio Profile	Application
Customized Audio Profile	This profile is applicable to other situations. You need to configure the audio parameters.

To set an audio profile, do one of the following:

- On the home screen, press the **Menu** key, and then go to **Settings** > **Profiles**.
- If the shortcut is configured, press the preprogrammed **Objective Profile** key.

8.3.2 Multi Audio

The terminal can be connected to the wired and wireless audio accessories simultaneously. You can select wireless (BT) or wired accessories for voice calls.

When the terminal is connected to the second audio accessory, an interface for selecting audio accessories will prompt up. You can select an audio accessory to be used. The interface automatically disappears after three seconds.

To set which audio accessory is used, on the home screen, press the **Menu** key, go to **Settings** > **Radio** > **Audio** > **Audio Output**, and then select **BT first** or **Latest first**.

- BT first

A wireless audio accessory will be used in preference. If both the BT and wired earpieces are connected, the BT earpieces will be used for calls in preference. The wired earpieces can be used only after the BT earpieces are disconnected.

- Latest first

The latest connected audio accessory will be used in preference. For example, if the BT earpieces are connected before the wired earpieces, the wired earpieces will be used for calls in preference. The BT earpieces can be used only after the wired earpieces are disconnected.

8.4 VOX

The VOX feature allows you to transmit by speaking instead of pressing and holding the **PTT** key. When the voice detected by the microphone reaches the value to trigger the transmission, the terminal will automatically transmit the voice without **PTT** pressed.

8.4.1 Enabling the VOX Feature

If the VOX feature is programmed, you can enable it as follows:

- On the home screen, press the **Menu** key, go to **Settings** > **Function** > **VOX** > **Switch**, and then select **On**.
- Press the preprogrammed **Vox** key.

8.4.2 Setting the Threshold

The microphone threshold is classified into external and internal microphone threshold. After the VOX feature is enabled, VOX will be triggered when the external or internal microphone detects that the voice volume reaches the threshold.

To set the threshold, go to **VOX** > **Mic Threshold**, select **External** or **Internal,** and then press the **Left** or **Right** key.

8.4.3 Selecting a Microphone

You can select which microphone to output voice for VOX.

- External: The voice received by the external microphone will be used as the input source for VOX.
- Ext First: When the external and internal microphones receive voice simultaneously, the voice received by the external microphone will be used in preference as the input source for VOX.

To select the microphone, go to **VOX** > **Mic Selection**, and then select **External** or **Ext First**.

8.5 Talkgroup

The talkgroup includes static group, dynamic group, default group, and home group. These groups can be arranged in the group folder, selected folder, and scan list for easy management.

8.5.1 Folder Type

Type	Description
Normal folder	● You can add static and dynamic groups to the normal folder for unified management. ● The normal folder can be set to the selected folder, but cannot be set to the scan list.
Dynamic folder	It contains dynamic groups.
Selected group folder	● It contains default groups. You can add groups to which you will initiate calls or send messages to the folder. ● Only one selected folder is allowed.
Scan list	● It contains groups to be scanned. Only static groups can be added to the folder. ● The terminal can have one or more scan lists. However, only one scan list will be active at the same time.
Dynamic scan list	It contains all dynamic groups (excluding dynamic background groups) that are involved in scanning.
Background folder	It contains background groups. The folder, which can only be configured and managed by your dealer, is invisible to terminal users.

Type	Description
Favorite folder	It is a special folder to help terminals switch between groups in different work modes.

8.5.2 Talkgroup Type

Type	Description
Static group	It is a fixed group configured by your dealer.
Dynamic group	It is temporarily created in the system or on the LDS. After accepting the dynamic group participation request, you can view the group on the terminal. After the dynamic group is dismissed, you cannot view the group on the terminal.
Temporary group	It is a special dynamic group that can last for the duration specified by the dispatcher.
Default Group	● It is the selected group. The terminal can initiate voice calls to or receive voice calls from this group, and can send messages or receive messages from this group. ● Only one default group is allowed.
Scan group	● The terminal can only receive voice calls or messages from this group when the Scan feature is enabled. ● The scan group is a talkgroup to which the terminal can attach.
Background group	● It is a special scan group. The terminal automatically attaches to the background group. ● The background group, which can only be configured and managed by your dealer, is invisible to terminal users.
Notification/Associated group	● The relationship between notification groups and associated groups must be configured. One notification group can be assigned to multiple associated groups, whereas one associated group can have only one notification group. ● When a notification group is set to the default group, all associated groups of the notification group can receive the call made to it. When an associated group is set to the default group, the notification group of the associated group can receive the call made to it.
Home group	● It is a group most frequently used by the terminal. ● You can quickly switch to the home group by pressing the preprogrammed **Return Home Group** key. Besides, after configurations, you can also enable the terminal to operate under the home group upon power-on. ● Only the talkgroup and the home group under the same mode can be switched.
2nd PTT group	It is a group that you can call by pressing the **Second PTT** key.

NOTE

Dynamic groups, scan groups, background groups, notification groups, 2nd PTT groups, dynamic folders, and scan lists are available in TMO.

8.5.3 Setting the Selected Folder

- Through the menu

  All static folders can be set to the selected folder.

  1. On the home screen, press the **Cancel/Back** key, or press the **Menu** key and then go to **Group**.
  2. Press the **OK** key, and then go to a folder.
  3. Press the **Menu** key, and then select **As Slctfolder**.

- Through the shortcut key

  - After the shortcut key is programmed, press the preprogrammed **As TMO SelGrp Folder** or **As DMO SelGrp Folder** key to set the specified folder to the selected folder.
  - Press the preprogrammed **Folder Up** or **Folder Down** key to select the previous or next selected folder.

8.5.4 Setting the Default Group

- Through the **Group Selector** knob

  Rotate the **Group Selector** knob to select a group, which will be the default group.

- Through the menu

  1. On the home screen, press the **Cancel/Back** key, or press the **Menu** key and then go to **Group**.
  2. Press the **OK** key, and then select the folder and group.
  3. Press the **Menu** key, and then select **As Default Grp**.

- Through the shortcut key

  - Press the preprogrammed **Change TMO Default Talkgroup** or **Change DMO Default Talkgroup** key to set the specified group to the default group.
  - Press the preprogrammed **Group Up** or **Group Down** key to select the previous or next default group.
  - Press the preprogrammed **Return to Previously Default Talkgroup** key to switch to the last default group.

  If the folder containing the new default group is not the selected folder, the folder will be set to the selected folder.

8.5.5 Setting the 2nd PTT Group

If the 2nd PTT feature is programmed, you can do the following to set a talkgroup to the 2nd PTT group:

1. On the home screen, press the **Cancel/Back** key, or press the **Menu** key and then go to **Group**.
2. Press the **OK** key, and then select the folder and group.
3. Press the **Menu** key, and then select **As 2nd PTT Group**.

8.5.6 Managing a Normal Folder

8.5.6.2 Creating a Folder

1. On the home screen, press the **Cancel/Back** key, or press the **Menu** key and then go to **Group**.
2. Press the **Menu** key, and then select **New Folder**.

8.5.6.3 Adding a Talkgroup/Clearing a Folder/Deleting a Folder

On the home screen, press the **Cancel/Back** key and then the **OK** key, go to a folder, and then press the **Menu** key. Then perform the following operations on the folder:

- Select **Add** to select a talkgroup to add it to the folder.
- Select **Clear**, and then confirm the operation to clear all talkgroups in the folder.
- Select **Delete**, and then confirm the operation to delete the folder.

8.5.7 Managing a Favorite Folder

8.5.7.2 Creating a Favorite Folder

1. On the home screen, press the **Cancel/Back** key, or press the **Menu** key and then go to **Group**.
2. Press the **Menu** key, and then select **New Favorite**.

8.5.7.3 Adding a Talkgroup

To add a talkgroup in TMO or DMO to a favorite folder, go to the folder, press the **Menu** key, and then select **Add TMO Group** or **Add DMO Group**.

8.5.7.4 Clearing/Deleting a Favorite Folder

To clear all talkgroups in a favorite folder or delete the folder, go to the folder, press the **Menu** key, and then select **Clear** or **Delete**.

8.5.8 Managing a Scan List

8.5.8.2 Enabling or Disabling the Scan Feature

On the home screen, press the **Cancel/Back** key, go to **Scan List**, press the **Menu** key, and then select **Scan On** or **Scan Off**. If **Scan On** is selected, the terminal will scan the talkgroups in the scan list that are allowed to be scanned. If **Scan Off** is selected, the terminal will not scan the talkgroups in the scan list.

8.5.8.3 Creating a Scan List

On the home screen, press the **Cancel/Back** key, go to **Scan List**, press the **Menu** key, and then select **New ScanList**.

8.5.8.4 Setting the Priority for a Group in the Scan List

Go to a group in the scan list, press the **Menu** key, select **Priority**, and then select **High**, **Medium**, or **Low**.

8.5.8.5 Other Operations

On the home screen, press the **Cancel/Back** key, select **Scan List** to select a list, and then press the **Menu** key. Then perform the following operations on the list:

- Select **ActiveScanList** or **InactiveScanList** to activate or deactivate the scan list.
- Select **Add** to select a talkgroup to add it to the scan list.
- Select **Clear**, and then confirm the operation to clear all scan groups in the scan list.
- Select **Delete**, and then confirm the operation to delete the scan list.

NOTE

- When the notification group is set to the default group, the scan list is invalid.
- The notification group cannot be added to the scan list.
- The scan list cannot be set to the selected folder.

8.6 DGNA

In TMO, the DGNA feature allows you to initiate a call to or receive a call from a dynamic group temporarily created by a dispatcher. You cannot use the dynamic group if it is dismissed by the dispatcher.

All dynamic groups are saved in the group menu.

For operations of initiating, receiving, or ending a DGNA call, see 6.1 Group Call.

8.7 Voice Feedback

The Voice Feedback feature allows the terminal to automatically broadcast upon group switch, feature activation, or information change, or by shortcut key, according to the pre-configured voice files.

To set the feature, on the home screen, press the **Menu** key, go to **Settings** > **Function** > **Voice Feedback** > **Switch**, and then select **On** or **Off**.

The terminal supports Voice Feedback in three languages in case that language packages are configured. If no voice files are programmed, or the terminal is in silent or emergency silent mode, the terminal will not broadcast.

8.8 Power

The Power feature is used to set the maximum transmission power of the terminal. The default maximum power is

1.8 W (32.5 dBm).

- In DMO, the maximum transmission power can be set to "1.8W(32.5dBm)", "1W(30dBm) ", "0.56W(27.5dBm) ", "0.3W(25dBm) ", or "0.18W(22.5dBm) ".
- In TMO, the maximum transmission power can be set to "1.8W(32.5dBm)", "1W(30dBm) ", or "0.56W(27.5dBm) ".

To set the maximum transmission power, on the home screen, press the **Menu** key, go to **Settings** > **Function** > **Power**, and then select a value.

8.9 Work Type

In DMO, the terminal can switch among different work types to initiate calls or send messages. The terminal has the following work types:

- MS-MS: The terminal directly communicates with another terminal.
- Repeater: The terminal can directly communicate with another terminal or communicate with another terminal through a repeater.
- Gateway: The terminal directly communicates with another terminal or communicates with another terminal through a gateway.
- GW + Rep: The terminal directly communicates with another terminal or communicates with another terminal through a gateway or repeater.

To select a work type, on the home screen, press the **Menu** key, go to **Settings** > **Work Type**, and then select a work type. After the settings, you can also further select **Automatic** or **Specific** (except MS-MS) to decide a random or specific device that the terminal will detect.

8.10 Energy Saving Mode

In TMO, the Energy Saving Mode feature allows the terminal to receive data from the BS periodically instead of continuously when the terminal is not transmitting or receiving. In this case, traffic on the control channel is reduced, which saves energy.

The receiving interval is subject to the energy saving level. A higher level indicates a longer interval.

To set the energy saving level, on the home screen, press the **Menu** key, go to **Settings** > **Function** > **Energy Saving Mode**, and then press the **Left** or **Right** key to adjust the level.

NOTE

- Before entering the energy saving mode, the terminal needs to send a request to the BS. If the BS supports energy saving and accepts the request, the terminal can enter the mode.
- If receiving the energy saving level from the BS, the terminal will adjust its energy saving level to that of the BS.

8.11 Group Call Detector

In TMO, the Group Call Detector feature allows the terminal to automatically reply a specified status message sent from the LDS after joining the group call initiated by the LDS. The feature helps the LDS to determine the number of the terminals in the group call through the status message.

This feature is authorized by your dealer. When the LDS makes a group call, the feature is triggered. When the LDS ends the group call, the terminal exits the feature.

8.12 Positioning

The Positioning feature allows you to collect position information of the terminal by using satellites. With the position information, you can view terminals' position, update time, and send position messages.

NOTE

This feature only applies to models with BDS, GPS, or GLONASS.

8.12.1 Viewing Position

8.12.1.2 Viewing the Terminal's Position

You can view the terminal's position, including longitude, latitude, and date and time. To view the position, on the home screen, press the **Menu** key, and then go to **Accessory** > **Positioning** > **Info**.

8.12.1.3 Viewing the Calling Party's Position

In TMO, if both parties in a call receive valid GPS data, the called party can view the position of the calling party. Do as follows:

1. On the home screen, press the **Menu** key, and then go to **Accessory** > **Positioning** > **Info**.
2. Press the **Menu** key, and then select **Caller**.

8.12.2 Updating Time

You can update time according to the position of the terminal. Do as follows:

1. On the home screen, press the **Menu** key, and then go to **Accessory** > **Positioning** > **Info**.

2. Press the **Menu** key, and then select **Update Time**.

8.12.3 Sending Position Messages

After receiving the valid GPS data, you can send a message containing the position information to a contact. Do as follows:

1. On the home screen, press the **Menu** key, and then go to **Accessory** > **Positioning** > **Info**.
2. Press the **Menu** key, and then select **Send Pos Msg**.
3. Press the **Menu** key, and then select **Send** or **Send Flash**.
4. Select a contact, and then press the **OK** key.

8.12.4 Setting the Positioning Feature

On the home screen, press the **Menu** key, go to **Accessory** > **Positioning** > **Settings**, and then perform the following operations:

Options	Description	Operation
System	This parameter decides which positioning system will be adopted by the terminal.	Select **System**, and then select required positioning systems. GPS, GPS+GLONASS, and GPS+BDS are supported.
Service	This parameter determines whether to enable the positioning service.	Select **Service**, and then select **On**, **Off**, or **Auto**.

8.12.5 Uploading Position Data

The terminal can upload its position data to the LDS or specified terminal.

Position data can be uploaded based on time, distance, power-on, power-off, transmission restriction mode enabling/disabling, or work type switch.

8.13 BT

CAUTION

- To derive optimal communication quality, it is recommended to use the BT devices specified by the Company.
- If other company's BT earpieces are used, you must use them with the wireless ring PTT of the Company. Otherwise, transmission is unavailable via the earpieces.

BT is a wireless technology that supports short-distance communications and data exchange between devices. With

the built-in BT module, you can connect the terminal to a BT device.

NOTE

The BT feature only applies to terminals with BT.

8.13.1 Enabling the BT Feature

You can enable the BT feature as follows:

- On the home screen, press the **Menu** key, go to **Accessory** > **BT** > **On/Off**, and then select **On**.
- Press the preprogrammed shortcut key for BT.

8.13.2 Connecting to a BT Device

1. Turn on the BT device and enter the pairing status. For detailed operations, refer to the corresponding accessory manual.
2. On the home screen, press the **Menu** key, and then go to **Accessory** > **BT** > **Pairing** to search for BT devices.

NOTE

The BT PTT and BT earpiece must be searched and connected separately. The operations are the same.

3. Select the required BT device in the device list, and then accept the connection request.

8.13.3 Setting Visibility

CAUTION

More power will be consumed with the Visibility feature enabled than with the feature disabled.

After the BT feature is enabled, the terminal waits for connection. When waiting time expires, the terminal enters the standby state to save power and ensure the security of BT connection. In this case, the terminal is invisible to other BT devices.

To respond to the BT connection request any time, you can set the terminal to be always visible after being turned on. To set visibility, on the home screen, press the **Menu** key, go to **Accessory** > **BT** > **Visibility**, and then select **On**.

8.14 Emergency Call

An emergency call is a call initiated by an individual user to the predefined contact for summoning help in emergency situations. With the highest priority, the emergency call can interrupt any calls with lower priorities.

In TMO, the emergency call mode includes regular mode and silent mode. In DMO, only regular mode is included.

- Regular mode: When initiating an emergency call, the terminal gives visual and audio indications.

- Silent mode: When initiating an emergency call, the terminal gives no visual or audio indications.

8.14.1 Initiating an Emergency Call

TMO

You can initiate an emergency call to an individual contact, a group contact, the default group, or a PABX/PSTN user, which can be configured. Press the **Emergency** key to initiate an emergency call.

DMO

Press the **Emergency** key to initiate an emergency call to the default group.

8.14.2 Answering an Emergency Call

For operations on how to receive an emergency call from an individual contact, a group contact, or a PABX/PSTN user, see 6.1.2 Receiving a Group Call, 6.2.2 Receiving an Individual Call, or 6.4 PABX/PSTN Call (TMO Only).

8.14.3 Ending an Emergency Call

TMO

- Regular mode
  - The calling party presses .
  - With the configuration, the calling party long presses the **Cancel/Back** key.
- Silent mode

  The calling party presses the **OK** key + **P3** key.

DMO

- The calling party presses .
- With the configuration, the calling party long presses the **Cancel/Back** key.

8.14.4 Emergency Call Type in DMO

In DMO, you can initiate an emergency call directly (default type) or switch to TMO to initiate an emergency call.

If you turn on the feature of switching from DMO to TMO for emergency call, the terminal will automatically switch to TMO when triggering an emergency call in DMO. Then, the terminal will initiate an emergency call after a successful registration. After the call ends, the terminal remains in TMO.

In this case, the called party is the pre-configured emergency contact in TMO by default. The called party can also be configured to a specified group.

8.14.5 Emergency Cycle

In an emergency call, the called party can only apply for the talk right after the calling party releases it by pressing the **PTT** key. The Emergency Cycle feature allows the calling party and the called party to automatically gain the

talk right in turn.

In an emergency call, after the transmitting duration of one party reaches the duration limit set for Emergency Cycle, the party automatically enters into the receiving status. In this case, the other party can press the **PTT** key to speak. The situation repeats until the cycle times expire.

NOTE

In Emergency Cycle, the calling party can also press the PTT key in the receiving status to gain the talk right. After the talk right is gained, Emergency Cycle ends.

8.14.6 Emergency Status Message

In TMO, the Emergency Status Message feature allows the terminal to send an emergency status code to an individual contact, a group contact, and the default group.

8.15 Security

8.15.1 Overspeed Alarm

The Overspeed Alarm feature allows the terminal to give audio or visual indications when it moves at a speed faster than the preset threshold. When the terminal moves at a speed lower than the preset threshold, the terminal exits the overspeed alarm.

This feature is configured by your dealer. To use the feature, the terminal needs to receive valid position data. When the feature is triggered, the terminal also reports the alarm to the preset contact or the LDS.

8.15.2 TxI

The TxI feature prevents the terminal from transmitting voice and data. It applies to places with RF exposure limits or potential security risks, such as in hospitals or on airplanes.

If the TxI feature is programmed, you can enable or disable it as follows:

- On the home screen, press the **Menu** key, and then go to **Settings** > **Function** > **TxI**.
- Press the preprogrammed shortcut key for TxI.

8.15.3 Covert Mode

The Covert Mode feature allows you to totally mute the terminal in some special situations. With the feature enabled, the terminal disables all visible and audible indications, and the screen is black. However, the keys are still available.

If an audio accessory is connected, voice will be output through the accessory.

8.15.3.2 Enabling the Covert Mode Feature

- On the home screen, press the **Menu** key, go to **Settings** > **Function** > **VOX** > **Switch**, and then select **On**.

- Press the preprogrammed shortcut key for Covert Mode.
- If configured, the terminal will automatically enter the covert mode upon power-on.

8.15.3.3 Exiting the Covert Mode Feature

- Press the preprogrammed shortcut key for Covert Mode.
- On the home screen, press the **OK** key + **P2** key.

8.15.4 Man Down

The Man Down feature allows the terminal to automatically enter the emergency mode when it is inclined by an angle greater than the preset angle, or keeps motionless or moves at a constant speed longer than the preset time. You can place the terminal or move it to exit the emergency alarm mode.

If the Man Down feature is programmed, you can enable or disable it as follows:

- On the home screen, press the **Menu** key, and then go to **Accessory** > **Man Down**.
- Press the preprogrammed shortcut key for Man Down.

8.15.5 Lone Worker

The Lone Worker feature allows your terminal to automatically send an emergency alarm to your companion or the control center if you do not operate your terminal or your terminal does not transmit voice within the preset time period. The terminal can exit the alarm if you press a key, rotate a knob, or make the terminal transmit.

After the Lone Worker feature is programmed, you can enable or disable it as follows:

- On the home screen, press the **Menu** key, and then go to **Settings** > **Function** > **Lone Worker**.
- Press the preprogrammed shortcut key for Lone Worker.

8.15.6 Temporary Disable, Permanent Disable, and Enable

In TMO, when the terminal is temporarily or permanently disabled by the LDS or trunking system, the screen becomes black, the terminal enters into the pseudo power-off status, and all functions except power-on and power-off will be locked out.

The temporarily-disabled terminal can be enabled by the LDS or trunking system. After the terminal is enabled, the screen wakes up. The terminal enters the standby status and resumes normal use.

To reuse a permanently-disabled terminal, send it back to the Company.

8.15.7 Delete Security Data Urgently

The Delete Security Data Urgently feature allows the terminal to erase encryption data in case of emergency, so as to prevent the data from unauthorized access. When erasing data, the terminal stops voice and data services and returns to the home screen.

If the Delete Security Data Urgently feature is programmed, you can press the **Menu** key, the **P2** key, the **P1** key, the **P2** key, and **Menu** key in order, and then press the **OK** key to confirm data deletion.

9. Troubleshooting

Phenomena	Analysis	Solution
The terminal cannot be turned on.	The battery may be improperly installed.	Remove the battery, and then reattach it.
	The battery power may run out.	Recharge or replace the battery.
	The battery may be poorly connected due to dirtied or damaged battery contacts.	Clean the battery contacts.
Network registration fails or no network is found.	The terminal may operate in DMO.	Switch to TMO.
	The terminal may be out of the network coverage.	Check the signal strength. Make sure that the terminal is within the network coverage.
	The terminal may not be granted network access.	Contact the network operator for authorization.
Calls cannot be initiated.	The terminal or the called party may be out of the network coverage.	Check the signal strength. Make sure that the terminals are within the network coverage.
	The terminal may operate in an improper mode.	Check the operation mode. Make sure that the terminal works in the proper mode.
A group call cannot be initiated or received.	The terminal may not be a member of the target group.	Check whether the terminal is a member of the group. If not, contact your dealer to add the terminal to the group.
	The terminal may not be authorized to access the target group.	Contact the network operator for the terminal authorization.
Calls are always interrupted.	The current channel may be assigned to calls with a higher priority, such as an emergency call, or the call may time out.	● Wait until the channel becomes available and try again. ● End the call within the preset time period.

Phenomena	Analysis	Solution
A half-duplex call cannot be established.	The predefined time period for establishing a call may expire.	Make sure that the call is established within the predefined time period.
	The channel may be occupied by another terminal with a higher call priority.	Wait until the channel becomes available and try again.
	The channel resources may be allocated to other services due to overloaded network.	Wait until the channel becomes available and try again.
Abnormal disconnection occurs during a call.	The terminal may be out of the network coverage (in TMO).	Check the signal strength. Make sure that the terminal is within the network coverage.
	The terminal may operate in an unfavorable position where communication signals may be blocked by high buildings or by being in the underground area (in DMO).	Move to an open and flat area, and restart the terminal.
The content of the status message for the receiving and transmitting parties is different.	The status message IDs may be different.	Make sure that the status message IDs for the receiving and transmitting parties are the same.

If the above solutions cannot fix your problems, or you may have some other queries, please contact us or your local dealer for more technical support.

10. Product Cleaning

To guarantee optimal performance as well as a long service life of the product, please follow these tips.

10.1 Product Care

- Do not pierce or scrape the product.
- Keep the product away from substances that can corrode the circuitry.
- Do not hold the product by its antenna or earpiece cable.
- Attach the accessory connector cover when no accessory is in use.

10.2 Product Cleaning

NOTE

Turn off the product and remove the battery before cleaning.

- Clean up the dust and fine particles on the product surface and charging piece with a clean and dry lintfree cloth or a brush regularly.
- Use neutral cleanser and a non-woven fabric to clean the keys, control knobs and front case. Do not use chemical preparations such as stain removers, alcohol, sprays or oil preparations, so as to avoid surface case damage.
- Make sure the product is completely dry before use

11. Optional Accessories

NOTE

Use the accessories specified by the Company only. Otherwise, we will not be liable for any loss or damage arising out of use of unauthorized accessories.

Contact your local dealer for the optional accessories used with the product.

12. Abbreviations

Abbreviation	Full Name
DMO	Direct Mode Operation
GLONASS	Global Navigation Satellite System
GPS	Global Positioning System
GSDM	Graceful Service Degradation Mode
LED	Light-Emitting Diode
OLED	Organic Light-Emitting Diode
PABX	Private Automatic Branch Exchange
PSTN	Public Switched Telephone Network
PTT	Push-To-Talk
SK	Side Key
TMO	Trunked Mode Operation