Preface

Welcome to the world of Hytera and thank you for purchasing this product. This manual includes a description of the functions and step-by-step procedures for use. To avoid bodily injury or property loss caused by incorrect operation, please carefully read the *Safety Information Booklet* before use.

This manual is applicable to Multi-mode Advanced Radio.

Copyright Information

Hytera is the trademark or registered trademark of Hytera Communications Corporation Limited (the Company) in the People's Republic of China (PRC) and/or other countries or areas. The Company retains the ownership of its trademarks and product names. All other trademarks and/or product names that may be used in this manual are properties of their respective owners.

The product described in this manual may include the Company's computer programs stored in memory or other media. Laws in PRC and/or other countries or areas protect the exclusive rights of the Company with respect to its computer programs. The purchase of this product shall not be deemed to grant, either directly or by implication, any rights to the purchaser regarding the Company's computer programs. The Company's computer programs may not be copied, modified, distributed, decompiled, or reverse-engineered in any manner without the prior written consent of the Company.

Disclaimer

The Company endeavors to achieve the accuracy and completeness of this manual, but no warranty of accuracy or reliability is given. All the specifications and designs are subject to change without notice due to continuous technological development. No part of this manual may be copied, modified, translated, or distributed in any manner without the prior written consent of the Company.

We do not guarantee, for any particular purpose, the accuracy, validity, timeliness, legitimacy or completeness of the third-party products and contents involved in this manual.

If you have any suggestions or would like to receive more information, please visit our website at: http://www.hytera.com.

FCC Statement

This equipment has been tested and found to comply with the limits for a Class B digital device, pursuant to part 15 of FCC Rules. These limits are designed to provide reasonable protection against harmful interference in a residential installation. This equipment generates and can radiate radio frequency energy. If not installed and used in accordance with the instructions, it may cause harmful interference to radio communications. However, there is no guarantee that interference will not occur in a particular installation. Verification of harmful interference by this equipment to radio or television reception can be determined by turning it off and then on. The user is encouraged to try to correct the interference by one or more of the following measures:

- Reorient or relocate the receiving antenna. Increase the separation between the equipment and receiver.
- Connect the equipment into an outlet on a different circuit to that of the receiver's outlet.
- Consult the dealer or an experienced radio/TV technician for help.

Operation is subject to the following two conditions:

- This device may not cause harmful interference.
- This device must accept any interference received, including interference that may cause undesired operation.

Note: Changes or modifications to this unit not expressly approved by the party responsible for compliance could void the user's authority to operate the equipment.

RF Energy Exposure Awareness and Control Information and Operational Instructions for Occupational Use

NOTICE: This radio is intended for use in occupational/controlled conditions where users have full knowledge of their exposure and can exercise control over their exposure to meet the occupational limits in FCC and International standards. This radio device is NOT authorized for general population consumer use.

This radio uses electromagnetic energy in the radio frequency (RF) spectrum to provide communications between two or more users over a distance. It uses radio frequency (RF) energy or radio waves to send and receive calls. RF energy is one form of electromagnetic energy. Other forms include, but are not limited to, sunlight and x-rays. RF energy, however, should not be confused with these other forms of electromagnetic energy, which when used improperly, can cause biological damage. Very high levels of x-rays, for example, can damage tissues and genetic material.

Experts in science, engineering, medicine, health, and industry work with organizations to develop standards for safe exposure to RF energy. These standards provide recommended levels of RF exposure for both workers and the general public. These recommended RF exposure levels include substantial margins of protection.

All Hytera radios are designed, manufactured, and tested to ensure they meet government-established RF exposure levels. In addition, manufacturers also recommend specific operating instructions to users of radios. These instructions are important because they inform users about RF energy exposure and provide simple procedures on how to control it.

Please refer to the following websites for more information on what RF energy exposure is and how to control your exposure to assure compliance with established RF exposure limits:

http://www.fcc.gov/oet/rfsafety/rf-faqs.html

Compliance with RF Exposure Standards

Hytera's radio complies with the following RF energy exposure standards and guidelines:

- United States Federal Communications Commission, Code of Federal Regulations; 47 CFR § 1.1307, 1.1310 and 2.1093
  - American National Standards Institute (ANSI) / Institute of Electrical and Electronic Engineers (IEEE) C95. 1:2005; Canada RSS102 Issue 5 March 2015
- Institute of Electrical and Electronic Engineers (IEEE) C95.1:2005 Edition

RF Exposure Compliance and Control Guidelines and Operating Instructions

To control your exposure and ensure compliance with the occupational/controlled environmental exposure limits, always adhere to the following procedures.

Guidelines:

- Do not remove the RF Exposure Label from the device.
- User awareness instructions should accompany device when transferred to other users.
- Do not use this device if the operational requirements described herein are not met.

Operating Instructions:

- Transmit no more than the rated duty factor of 50% of the time. To transmit (talk), push the Push-To-Talk (PTT) key. To receive calls, release the PTT key. Transmitting 50% of the time, or less, is important because the radio generates measurable RF energy only when transmitting (in terms of measuring for standards compliance).
- Keep the radio unit at least 2.5 cm away from the face. Keeping the radio at the proper distance is important as RF exposure decreases with distance from the antenna. The antenna should be kept away from the face and eyes.
- When worn on the body, always place the radio in a Hytera-approved holder, holster, case, or body harness or by use of the correct clip for this product. Use of non-approved accessories may result in exposure levels which exceed the FCC's occupational/controlled environmental RF exposure limits.
- Use of non-approved antennas, batteries, and accessories causes the radio to exceed the FCC RF exposure guidelines.
- Contact your local dealer for the optional accessories of the product.

ISED Statement

The device has been tested and complies with SAR limits, users can obtain Canadian information on RF exposure and compliance

Après examen de ce matériel aux conformité aux limites DAS et/ou aux limites d’intensité de champ RF, les utilisateurs peuvent sur l’exposition aux radiofréquences et la conformité and compliance d’acquérir les informations correspondantes

This device complies with Innovation, Science and Economic Development Canada Compliance license-exempt RSS standard(s). Operation is subject to the following two conditions:

- This device may not cause harmful interference.
- This device must accept any interference received, including interference that may cause undesired operation.

Le présent appareil est conforme aux CNR d'Industrie Canada applicables aux appareils radio exempts de licence. L'exploitation est autorisée aux deux conditions suivantes: (1) l'appareil ne doit pas produire de brouillage, et (2) l'utilisateur de l'appareil doit accepter tout brouillage radioélectrique subi, même si le brouillage est susceptible d'en compromettre le fonctionnement

EU Regulatory Conformance

As certified by the qualified laboratory, the product is in compliance with the essential requirements and other relevant provisions of the following directives: 1999/5/EC or 2014/53/EU, 2006/66/EC, 2011/65/EU, and 2012/19/EU.

Please note that the above information is applicable to EU countries only.

Contents

1. Product Overview 3
1.1 Product Controls 3
1.2 Key Description 4
1.3 Radio Screens 5
2. Before Use 7
2.1 Charging the Battery 7
2.2 Installing the SIM Card and Micro-SD Card 8
2.3 Attaching the Battery 9
2.4 Attaching the Antenna 9
2.5 Attaching the Belt Clip 10
2.6 Attaching the Accessory 10
3. Basic Operations 11
3.1 Turning the Radio On or Off 11
3.2 Adjusting the Volume 12
3.3 Selecting a Channel or Contact 12
3.4 Operating the Main Screen 13
3.5 Locking and Unlocking the Main Screen 15
3.6 Switching the Operation Mode 16
4. Status Indications 17
4.1 LCD Icons 17
4.2 LED Indications 19
5. Call Services 20
5.1 Group Calls 20
5.2 Private Calls 20
5.3 Broadcast Calls (Trunking Only) 21
5.4 All Calls 22
5.5 Calls on Analog Channels (Conventional Only) 22
5.6 Phone Calls 22
6. Message Services 24
6.1 Viewing Messages 24
6.2 Sending Messages 24
6.3 Forwarding Messages 24
6.4 Deleting Messages 25
7. Supplementary Features 26
7.1 Basic Settings 26

7.2 Contact Management.....27
7.3 Wireless and Network.....28
7.4 APPs.....29
7.5 Power Level.....35
7.6 Radio over IP (RoIP).....35
7.7 Scan.....36
7.8 Roam.....37
7.9 Position.....37
7.10 Analog Services.....37
7.11 Encryption.....38
7.12 Stun.....38
7.13 Kill.....38
8. Troubleshooting.....39
9. Care and Cleaning.....41
10. Optional Accessories.....42
11. Specifications.....43

Documentation Information

Icon Conventions

Icon	Description
Note	Indicates references that can further describe the related topics.
Caution	Indicates situations that could cause data loss or equipment damage.

Notation Conventions

Item	Description	Example
Boldface	Denotes menus, tabs, parameter names, window names, dialogue names, and hardware buttons.	To save the configuration, click **Apply**.
		The **Log Level Settings** dialogue appears.
		Press the **PTT** key.
" "	Denotes messages, directories, file names, folder names, and parameter values.	The screen displays "Invalid Battery!".
		Open "PDT_PSS.exe".
		Go to "D:/opt/local".
		In the **Port** text box, enter "22".
>	Directs you to access a multi-level menu.	Go to **File** > **New**.
Italic	Denotes document titles.	For details about using the DWS, refer to *Dispatch Workstation User Guide*.
`Courier New`	Denotes commands and their execution results.	To set the IP address, run the following command: `vos-cmd - m name IP`

Key Operations

Operation	Description
Short press	Press and release rapidly.
Long press	Press and hold for the preset duration (2s by default).
Double press	Press twice continuously and quickly.
Press and hold	Keep the key pressed.

Touch Screen Operations

Operation	Description	Example
Tap	Touch items once with your finger tip.	Tap to launch the Camera app.
Touch and hold	Touch items with your finger and maintain contact.	Touch and hold until it jiggles.
Swipe	Swipe your finger across the screen.	Swipe down from the top edge of any screen to access the notification panel.
Drag	Touch and hold an item, and then move it to a new position.	Touch and hold until it jiggles, and then drag it to the proper position.
Pinch	Move two fingers together on the screen.	Pinch the screen to zoom out.
Spread	Move two fingers apart on the screen.	Spread the screen to zoom in.

1. Product Overview

1.1 Product Controls

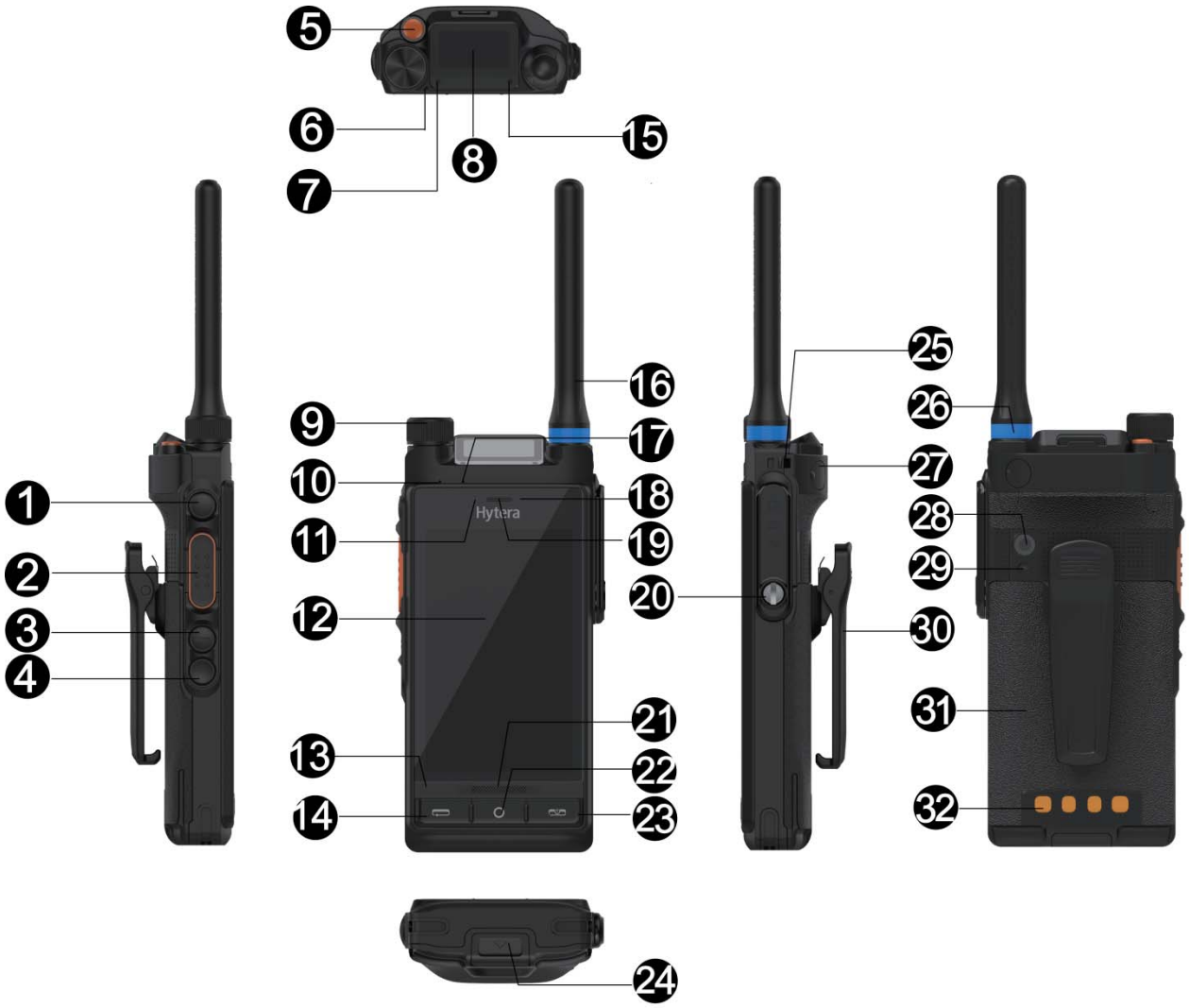

No.	Part Name	No.	Part Name
1	Smart Key	17	Pressure Sensor
2	Push-to-Talk (PTT) Key	18	Front-facing Camera
3	Side Key 2 (SK2)	19	Speaker
4	Side Key 3 (SK3)	20	Accessory Connector
5	Top Key (TK)	21	Speaker
6	Microphone 3	22	Home Key

No.	Part Name	No.	Part Name
7	LED Indicator 1	23	Power/End Call Key
8	Top Screen	24	Battery Latch
9	Smart Knob	25	Strap Hole
10	Microphone 2	26	Colored Ring
11	Light Sensor	27	CARKIT RF Connector
12	Main Screen	28	Rear-facing Camera
13	Microphone 1	29	Flash
14	Back/Answer Call Key	30	Belt Clip
15	LED Indicator 2	31	Battery
16	Antenna	32	Charging Piece

1.2 Key Description

The following table describes functions of the radio's keys.

Key	Description
PTT key	● Press the key to initiate or answer calls. ● Press and hold the key to speak during half-duplex calls.
Smart Key	● When the main screen is on, long press the key to turn it off. ● When you view a list or page, press the key to flip. ● When the main screen is off, press the key to turn it on, or long press the key to launch the camera.
SK2/SK3	Programmable keys. You can set the keys as shortcuts to radio features. Then you can press, long press, or double press the keys to trigger the assigned features.
TK	Programmable key. You can set this key as shortcuts to the following two radio features: Emergency call and Cancel emergency call. Then you can press or long press the key to initiate or end an emergency call.
Back/Answer key	Press the key to return to the upper-level menu or answer calls.

Key	Description
Home key	● When the main screen is off, press the key to turn it on. ● When the main screen is on, press the key to return to the home screen, or double press the key to view running apps.
On-Off/End key	● Press the key to end ongoing calls. ● Long press the key to turn the radio on or off.
Key combination	Press **SK2**+**SK3** to take a screenshot.

1.3 Radio Screens

The radio provides two screens: top screen and main screen.

1.3.1 Top Screen

The top screen shows information about narrow band (NB) services. It includes the following three areas:

- Status bar: Shows status icons.
- Content bar: Mainly shows the selected channel or contact and icons related to ongoing calls.
- Information bar: Shows icons indicating unread messages and missed calls, time information, and current operation mode.

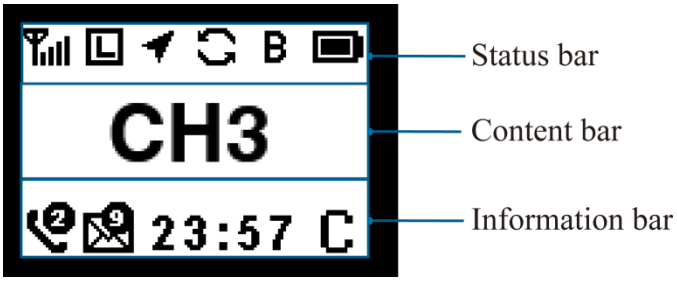

1.3.2 Main Screen

The main screen is a touch screen with Android Platform (AP) for managing widgets, apps, information, and radio settings. The home screen contains the status bar, NB widget, and broadband (BB) widgets.

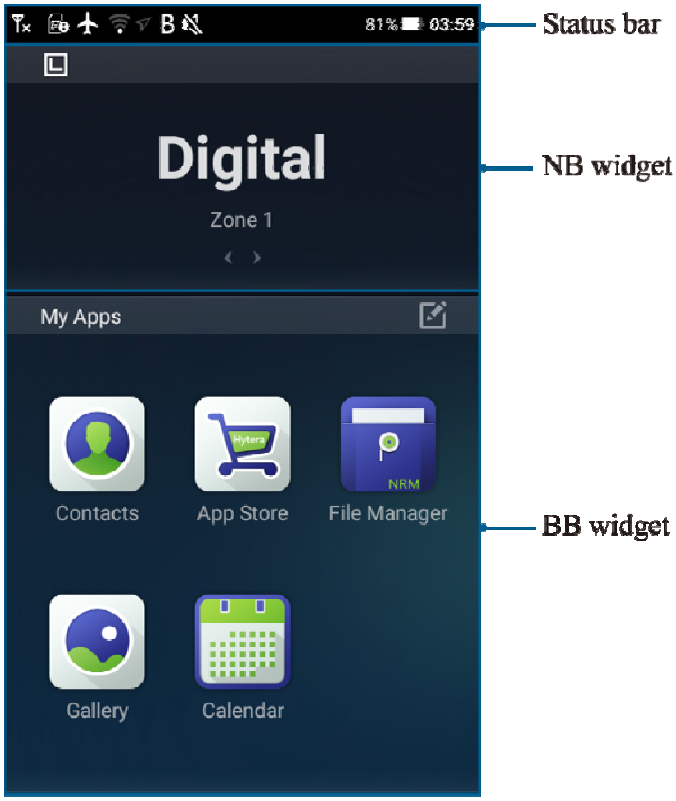

On the main screen, you can also access the notification panel, quick setting panel, and application (app) list. For detailed operations, see 3.4 Operating the Main Screen.

2. Before Use

2.1 Charging the Battery

Caution

- Use the approved charger to charge the battery.
- Read the *Safety Information Booklet* before charging.

Before initial use, fully charge the battery to ensure optimum performance.

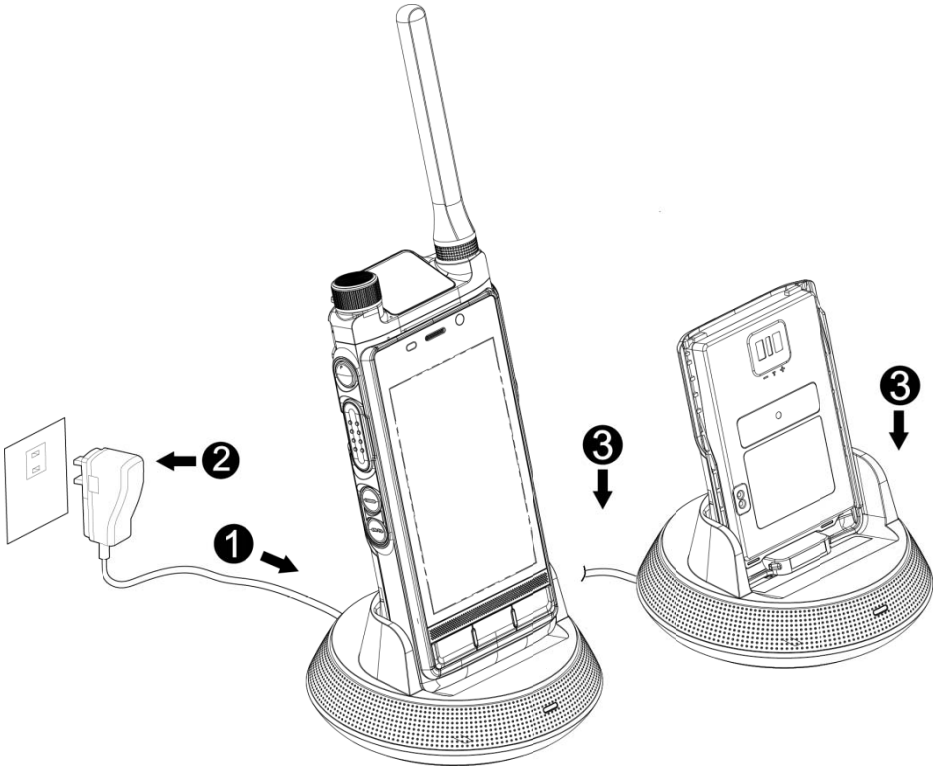

To determine the charging status, check the LED indicator on the charger according to the following table:

LED Indicator on Charger	Charging Status
Flashes orange slowly	The charger is being activated.
Flashes red slowly	The battery fails to make proper contact with the charger.
Glows red	The battery is charging.
Glows green	The battery is fully charged.
Flashes red rapidly	The battery fails to be charged.

If the LED indicator flashes red slowly, take the battery out of the charger, and then place it into the charger for proper contact.

If the LED indicator flashes red rapidly, please contact your dealer to check whether the battery or power adapter is damaged.

2.2 Installing the SIM Card and Micro-SD Card

If you are provided with an SIM card and a micro-SD card, install them as follows:

1. Open the card slot cover on the top of the battery compartment.
2. Pull the SIM card tray out of the slot, and place the SIM card with the gold contacts facing up on the tray.
3. Insert the card tray with the SIM card back into the slot.
4. Insert the micro-SD card into the corresponding slot.
5. Put the card slot cover back in place.

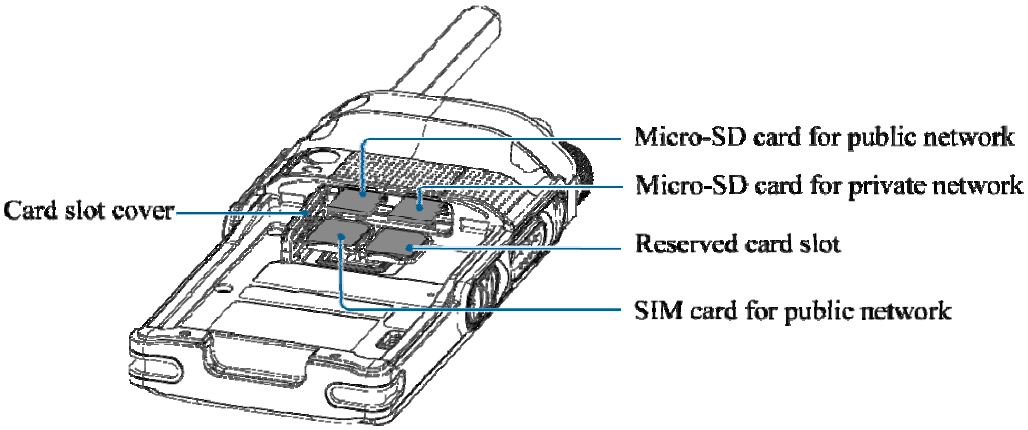

2.3 Attaching the Battery

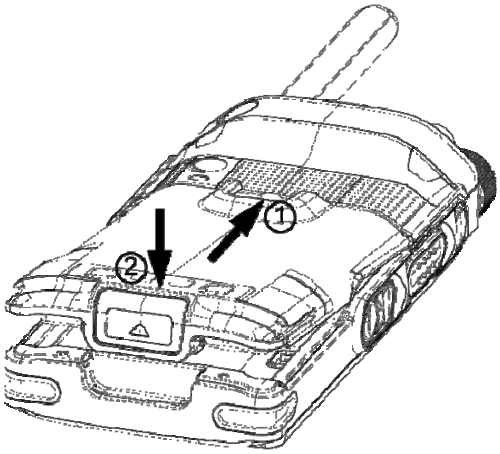

2.4 Attaching the Antenna

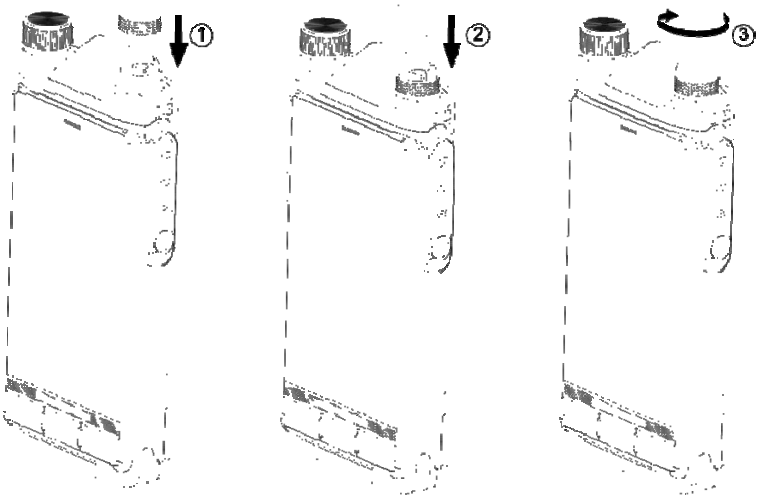

Caution

Do not hold the radio by the antenna, as it may reduce the radio performance and life span of the antenna.

2.5 Attaching the Belt Clip

1. Align the rails on the belt clip with the grooves on the battery.
2. Press the belt clip downwards into place.

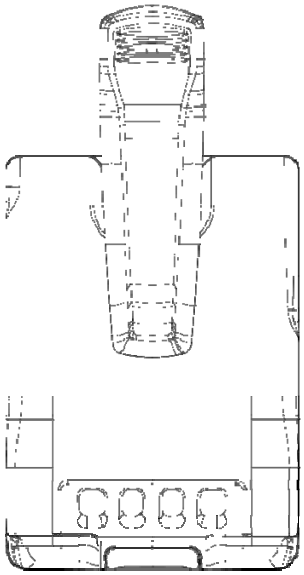

2.6 Attaching the Accessory

Note

For optimal waterproof and dustproof performance, close the accessory connector cover and fasten the screw when no accessory is attached.

1. Turn the screw on the accessory connector cover counterclockwise, and open the cover.
2. Insert the accessory plug into the top of the accessory connector.
3. Turn the screw on the accessory plug clockwise until hand tight.

3. Basic Operations

3.1 Turning the Radio On or Off

To turn the radio on, press and hold the **Power** key until the splash screen appears.

To turn the radio off, do as follows:

1. Press and hold the **Power** key until the power-off selection screen appears.
2. Tap **Device Power Off**, and then tap **SURE**.

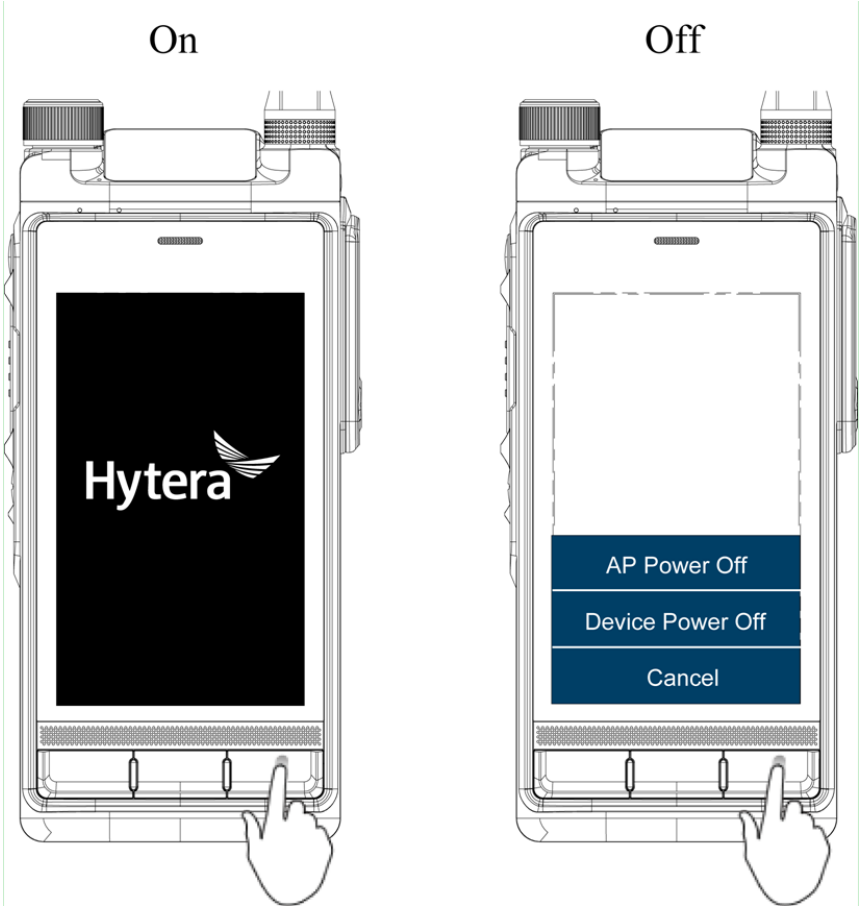

3.2 Adjusting the Volume

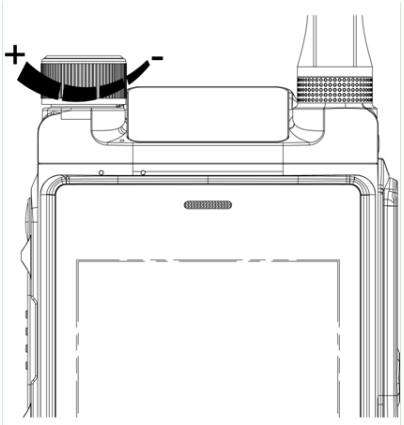

3.3 Selecting a Channel or Contact

1. Press the **Smart Knob**.
2. After the top screen displays , rotate the knob.

If you do not operate the knob within 10s, it automatically returns to the volume control state.

3.4 Operating the Main Screen

3.4.1 Accessing and Managing Widgets

On the home screen, you can access, add, delete, or reposition widgets.

Note

You cannot remove or reposition the NB widget.

Accessing Widgets

To access widgets on the home screen, swipe up or down to the target widget, and then tap it.

Adding Widgets

1. Touch and hold the widget below which you want to add a new widget, until the widget is highlighted.
2. Tap **ADD**, and then tap the required widget.
3. Tap **OK**.

Deleting Widgets

1. Touch and hold the widget to be deleted until it is highlighted.
2. Tap on the upper right corner of the widget, and then tap **OK**.

Repositioning Widgets

1. Touch and hold the widget to be repositioned.
2. After the widget is highlighted, drag it up or down to the desired position.
3. Press the **Home** key.

3.4.2 Accessing and Managing Apps

From the home screen, you can access the app list, and then reposition or delete apps.

Accessing Apps

1. Swipe left or right from the right or left edge of the home screen.
2. Swipe up or down to view the apps, and then tap the target app.

Note

To set whether you can access the app list from the left or right edge of the home screen, tap the **Settings** icon in the app list, go to **General** > **Device** > **Personalization** > **Side_fence**, and then tap **Left**, **Right**, or

Both.

Repositioning Apps

1. Touch and hold the app icon to be repositioned until it jiggles.
2. Drag the app icon to the desired position.
3. Press the **Home** key.

Deleting Apps

1. Touch and hold the app icon to be deleted until it jiggles.
2. Tap ⊗ on the upper right corner of the app icon.
3. Tap **OK**.

You cannot delete built-in apps.

3.4.3 Viewing and Managing Notifications

You can access the notification panel to view and clear notifications.

Viewing Notifications

1. Swipe down from the top edge of any screen to view notifications.
2. Tap a notification to view the details.

Clearing Notifications

To clear a notification, swipe the notification left or right.

To clear all notifications, tap **Clear** at the bottom of the notification panel.

3.4.4 Searching for Apps, Messages, and Contacts

1. Swipe down from the top edge of any screen.
2. Tap the search bar on the top.
3. Use the on-screen keypad to enter the keyword.

3.4.5 Performing Quick Settings

The quick setting panel provides instant access to Settings, Camera, Flashlight, Calculator, and other handy features. You can also adjust the brightness, and turn on or off the airplane mode, Wi-Fi, NB network, Bluetooth, and so on.

- To access the quick setting panel, swipe up from the bottom edge of any screen. You can swipe left to view additional items.
- To reposition an item, touch and hold the item, and drag it to the desired position after it is highlighted.

3.4.6 Managing Running Apps

You can access and close running apps.

Accessing Running Apps

1. Double-press the **Home** key from any screen.
2. Swipe up or down to the target app, and then tap it.

Closing Running Apps

To close a running app, swipe it left or right.

To close all running apps, tap .

3.5 Locking and Unlocking the Main Screen

When the main screen is not in use, it is recommended that you turn it off to save the battery and avoid unintended operations.

- To turn off the screen, long press the **Smart Key**.
- To allow the main screen to be turned off automatically, go to **Settings** > **General** > **Device** > **Display** > **Main Screen** > **Sleep**, and then tap the required interval.
- To turn on the screen, press the **Smart Key** or **Home** key.

In addition, it is recommended that you secure your radio using a screen lock. The screen lock is triggered after the main screen is turned off.

To set the screen lock, do as follows:

1. Go to **Settings** > **General** > **Privacy & Security** > **Screen Lock**.
2. Tap **Unlock Pattern**, and then tap one of the following:
   - **None**: The screen will never be locked.
   - **Swipe**: Swipe up to unlock.
   - **Password**: Create a password for unlocking the screen.
   - **Pattern**: Create a pattern that you draw on the screen to unlock it.

3.6 Switching the Operation Mode

The radio can operate in NB mode or NB & broadband (BB) mode. The NB mode further includes the following two types:

- Conventional mode: supports half-duplex operation and allows radios to communicate directly, without using the network.
- Trunking mode: supports half-duplex operation and allows radios to communicate over the network. The radio must register with the network and then operate within the network coverage.

To switch the specific NB mode, go to **Settings** > **Private** > **Mode**, and then tap the required mode.

Upon power-on, the radio operates in NB & BB mode. To allow the radio to operate only in NB mode, do as follows:

1. Press and hold the **Power** key until the power-off selection screen appears.
2. Tap **AP Power Off**, and then tap **SURE**.

4. Status Indications

4.1 LCD Icons

Status Icons

Screen	Icon	Radio Status
Top screen & main screen		This icon shows the battery level.
		The battery power is low.
		The radio is charging.
		The NB network is turned off.
		There is no signal from the NB network.
		The number of bars indicates the signal strength of the NB network.
		The number of bars indicates the signal strength when the radio operates in trunking mode under a single BS.
		The radio is set at low power.
		The radio is set at high power.
		An accessory is connected.
	B	The Bluetooth feature is enabled.
	B	A Bluetooth device is connected.
		The Position feature is enabled, and the radio receives positioning data.
		The Position feature is enabled, but the radio receives no positioning data.
		The radio is roaming.
		The Encryption feature is enabled.
		The radio is scanning.
		The Squelch Off feature is enabled.
		The Monitor feature is enabled.
		The radio operates in silent mode.

Main screen		The number of bars indicates the signal strength of the BB network.
	3G	A 3G network is available.
	4G	A 4G network is available.
	E	An EDGE network is available.
		No SIM card is detected.
		The radio operates in Do Not Disturb mode.
		The radio is downloading.
		The radio is connected to the Internet over a Wi-Fi network.
		The radio provides a personal hotspot.
		The radio operates in Airplane mode.
		The Voice Recorder feature is enabled.
		The Alarm feature is enabled.

Call and Data Icons

Icon	Radio Status
	The digit indicates the number of missed calls.
	The digit indicates the number of unread short messages.
	An emergency call is in progress.
	The radio is transmitting on an analog channel.
/ /	A private/group/all call is in progress on the NB network.
/ /	An encrypted private/group/all call is in progress on the NB network.
/ /	A private/group/all call is in progress on a Radio over IP (RoIP) network.
	A broadcast call is in progress.

4.2 LED Indications

LED Indicator 1

LED Indicator	Radio Status
Flashes blue	A Bluetooth device is connected.
Flashes red	There is/are unread short messages/notifications or missed calls.

LED Indicator 2

LED Indicator	Radio Status
Flashes green	Being turned on.
Flashes green slowly	Standby in trunking mode.
Glows green	Receiving.
Glows red	● During a call: Transmitting. ● Standby: The battery runs low. Please recharge or replace the battery.
Flashes red	Establishing a call in trunking mode. This indication is applicable to the calling radio.
Flashes orange slowly	● Conventional mode: scanning or roaming ● Trunking mode: registering
Flashes orange rapidly	● Conventional mode: working in emergency mode. ● Trunking mode: Establishing a Full Off Air Call Set-Up (FOACSU) call. This indication is applicable to the called radio.
Glows orange	Call hang time: No voice is being transmitted or received during a call. Within such a period, you can press and hold the **PTT** key and speak.

5. Call Services

You can initiate various types of calls in different ways. When initiating an NB call by entering the target number, make sure that the number complies with the dial rule. For the detailed dial rule, please consult your dealer.

5.1 Group Calls

A group call is a half-duplex NB call from an individual user in a group to all the other members in the group.

5.1.1 Initiating Group Calls

To initiate a call to a group contact saved in **Contacts**, do as follows:

1. Select the target group contact in one of the following ways:
   - Press the **Smart Knob**, and then rotate it to the position associated with the target group contact.
   - Tap > **Favorites**/**Group**, and then tap the target group.
2. Press and hold the **PTT** key.

To initiate a call to a group contact not saved in **Contacts**, do as follows:

1. Tap , and then enter the target number.
2. Tap **PMR Group Call**, and then press and hold the **PTT** key.

5.1.2 Receiving Group Calls

You can listen to a received group call without any operation.

5.1.3 Ending or Exiting Group Calls

A group call ends automatically when the call hang time expires.

In trunking mode, you can also press the **End** key to end an outgoing group call or exit an incoming group call.

5.2 Private Calls

A private call is a half-duplex NB call initiated by one individual user to another.

5.2.1 Initiating Private Calls

To initiate a call to a private contact saved in **Contacts**, do as follows:

1. Select the target private contact in one of the following ways:
   - Press the **Smart Knob**, and then rotate it to the position associated with the target private contact.

- Tap > **Favorites**/**Private**, and then tap the target private contact.

2. Press and hold the **PTT** key.

To initiate a call to a private contact not saved in **Contacts**, do as follows:

3. Tap , and then enter the target number.

4. Tap **PMR Private Call**, and then press and hold the **PTT** key.

5.2.2 Receiving Private Calls

In conventional mode, you can listen to a received private call without any operation.

In trunking mode, the operation varies with the setup mode of the received private call:

- FOACSU

  Press the **PTT** key to answer the call.

- Off Air Call Set-Up (OACSU)

  The call is established automatically. You can listen to it without any operation.

5.2.3 Ending Private Calls

A private call ends automatically when the call hang time expires.

In trunking mode, you can also press the **End** key to end the call.

5.3 Broadcast Calls (Trunking Only)

A broadcast call is a special group call. In a broadcast call, only the calling party can speak. Your radio must be authorized by your dealer for you to initiate a broadcast call.

5.3.1 Initiating Broadcast Calls

To initiate a broadcast call, do as follows:

1. Tap > **Favorites/Group**.
2. Tap the target group contact, and then tap .

5.3.2 Receiving Broadcast Calls

You can listen to a received broadcast call without any operation.

5.3.3 Ending or Exiting Broadcast Calls

Press the **End** key to end an outgoing broadcast call or exit an incoming broadcast call.

5.4 All Calls

In conventional mode, an all call is a call from an individual user to all the other users on the current channel.

In turnking mode, an all call is a call from an individual user to all the other users in a specific base station, area, or system.

Your radio must be authorized by your dealer for you to initiate an all call.

5.4.1 Initiating All Calls

To initiate an all call, do as follows:

1. Tap > **Group** and select the all call contact, or tap and enter the all call number.
2. Press and hold the **PTT** key.

5.4.2 Receiving All Calls

You can listen to an incoming all call without any operation.

5.4.3 Ending or Exiting All Calls

In conventional mode, an all call ends after the calling party release the **PTT** key.

In trunking mode, you can press the **End** key to end an outgoing all call or exit an incoming all call.

5.5 Calls on Analog Channels (Conventional Only)

On analog channels, you can initiate calls to all the other users on the channels. To initiate such a call, do as follows:

1. Press the **Smart Knob**, and then rotate it to select the required channel.
2. Press and hold the **PTT** key, and speak into the microphone.

5.6 Emergency Calls

An emergency call is a call initiated to ask for help in case of emergency. The radio must be authorized by your dealer for you to initiate an emergency call.

5.6.1 Initiating an Emergency Call

To initiate an emergency call, press the **Emergency On** key.

5.6.2 Receiving an Emergency Call

You can listen to a received emergency call without any operation.

5.6.3 Ending or Exiting an Emergency Call

As the calling party, you can press the **Emergency Off** key or turn off the radio to end an emergency call.

As the called party, you can press the **End** key or tap to exit an emergency call.

5.7 Phone Calls

If you insert an SIM card, you can initiate a call to a phone number.

5.7.1 Initiating Phone Calls

To initiate a call to a phone number saved in **Contacts**, do as follows:

1. Tap > **Favorites/Private**.
2. Tap the target contact, and then tap .

To initiate a call to a phone number not saved in **Contacts**, do as follows:

3. Tap , and then enter the target number.
4. Tap .

5.7.2 Receiving Phone Calls

To answer a received phone call, tap .

5.7.3 Ending Phone calls

To end a phone call, tap .

6. Message Services

The Message feature allows you to send and receive messages.

6.1 Viewing Messages

To view a message, tap , and then tap the target message.

6.2 Sending Messages

You can create a message or send a predefined quick text message.

6.2.1 Creating and Sending Messages

1. Tap , and then tap .
2. Enter the target number in the **To** text box, or tap + to select a contact.
3. Tap the **Type message** text box, and enter the text.

   You can also tap + to add the required attachment.
4. Tap → to send the message.

Note

If you do not tap → , the created message will be saved as a draft.

6.2.2 Sending Quick Text Messages

To send a quick text message, do as follows:

1. Tap , and then tap in the lower right corner.
2. Enter the target number in the **To** text box, or tap + to select a contact.
3. Tap + in the front of the **Type message** text box.
4. Slide right to access the predefined message list.
5. Tap the required message, and then tap → .

6.3 Forwarding Messages

1. Tap , and then tap the conversation containing the message to be forwarded.
2. Touch and hold the target message to select it, and then tap **Forward**.
3. Enter the target number in the **To** text box, or tap + to select a contact.

4. Tap → .

6.4 Deleting Messages

To delete a conversation, do as follows:

1. Tap .
2. Touch and hold the target conversation to select it.
3. Tap **Delete** > **DELETE**.

To delete a single message in a conversation, do as follows:

1. Tap , and then tap the conversation.
2. Touch and hold the target message to select it.
3. Tap **Delete** > **DELETE**.

7. Supplementary Features

7.1 Basic Settings

You can tap **Settings** > **General** and then do the following operations:

If you want to...	Then...
Set **SK2**, **SK3**, and **TK** as shortcuts to radio features	Go to **Device** > **Programmable keys** > **SK2/SK3/TK** > **Short press** / **Long press** / **Double-click**, and then tap the required feature.
Set the language	Go to **System** > **Language & input** > **Language**, and then tap the required language.
Set the wallpaper	1. Go to **Device** > **Personalization** > **Wallpaper**. 3. Tap the required picture, and then tap **CONFIRM**.
Adjust the brightness of backlight	Go to **Device** > **Display** > **Main screen** / **Top screen**, and then drag the brightness slider.
Turn vibration on or off	Go to **Device** > **Sounds**, and then tap **Vibrate on ring** or **Vibrate on silent**.
Set the profile	Go to **Device** > **Sounds** > **Profiles**, and then tap **Ring** or **Mute**.
Set the ring, media, alarm, and call volume	Go to **Device** > **Sounds** > **Volume**, and then drag the corresponding slider.
Select ringtones	1. Go to **Device** > **Sounds** > **Sounds and vibrations**. 2. Tap the corresponding tone, and then set tap the required ringtone.
Clear cached data	Go to **Device** > **Storage** > **Cached data**, and then tap **OK**.
Set whether the main screen displays battery percentage in the status bar	Go to **Device** > **Battery**, and then tap **Battery percentage**.
Turn the gloves mode on or off	Go to **Device** > **Assistance**, and then tap **gloves mode**.
Set the date and time	Go to **System** > **Date & time**.

7.2 Contact Management

The Contact feature allows you to view and manage private and group contacts.

7.2.1 Adding Private Contacts

To add a private contact, do as follows:

1. Tap > **Private** > .
2. Tap and assign a picture to the contact by choosing one the following options:
   - **Take Photo**: use the camera to take a photo.
   - **Choose Photo**: choose a photo from the Gallery.
3. Tap the **Name** text box, and enter the contact name.
4. Tap the **Add PMR Number** text box, and enter the Private Mobile Radio (PMR) number of the contact.
5. Tap , and then tap the required type of phone number.
6. Tap the **Add Phone Number** text box and enter the phone number.
7. (Optional) Tap **Add Number** to add another phone number.
8. Tap the **Email**, **Address**, and **Note** text boxes and enter the related information.
9. Tap **Save** in the upper right corner.

7.2.2 Adding Contacts to Favorites

To add frequently used contacts to the **Favorites** list, do as follows:

1. Tap > **Favorites** > .
2. Tap the required contacts, and then tap **OK**.

7.2.3 Deleting Private Contacts

1. Tap , and then tap **Private**.
2. Tap the contact to be deleted, and then tap .
3. Swipe up to the bottom, and then tap **Delete**.
4. Tap **OK**.

7.3 Wireless and Network

7.3.1 Wi-Fi

The Wi-Fi feature provides free Internet access.

To connect to a Wi-Fi network, do as follows:

1. Go to **Settings** > **General** > **Wireless & networks** > **Wi-Fi**.
2. Check whether Wi-Fi is on. If yes, go to the next step. If no, tap **Off** to turn on it.

   When Wi-Fi is turned on, the radio automatically scans for available networks and displays them.
3. Tap the network you want to connect to.

   When you select an open network, the radio automatically connects to it. Otherwise, enter a password to connect.

7.3.2 Bluetooth

The Bluetooth feature allows a wireless connection with another Bluetooth device for short-range communication.

To pair the radio with another Bluetooth device, do as follows:

1. Go to **Settings** > **General** > **Wireless & networks** > **Wi-Fi**.
2. Check whether Bluetooth is on. If yes, go to the next step. If no, tap **Off** to turn on it.
3. Tap the name of the target device.

7.3.3 Personal Hotspot

The Personal Hotspot feature allows you to share the radio's Internet connection with other devices.

To set up a hotspot, do as follows:

1. Go to **Settings** > **General** > **Wireless & networks** > **Personal Hotpot** > **Set up Wi-Fi hotspot**.
2. Enter the related information, and then tap **Save**.

To turn on or off the Bluetooth tethering feature, tap **Bluetooth tethering** under **Personal Hotspot**.

7.3.4 NFC

The Near Field Communication (NFC) feature allows data exchange when you touch the radio with another compatible device.

To turn on or off NFC, go to **Settings** > **General** > **Wireless & networks** > **More**, and then tap **NFC**.

7.4 APPs

On the AP, you can use embedded apps as you do on your mobile phone. To launch an app, tap the related app icon.

7.4.1 Camera

The Camera app allows you to take photos and record videos. It includes tabs for recording a video, taking an ordinary photo, or taking a panorama photo.

Taking Photos

To take a photo, do as follows:

1. Launch the Camera app.
2. Swipe left or right to the tab with .
3. Tap to do the following basic settings:
   - : Turn on or off the flash.
   - HDR: High Dynamic Range, helps you get a brighter and richer photo.
   - : Take time-delayed photos
   - : Switch between the front-facing camera and rear-facing camera.
4. Tap in the upper right corner to do other settings, such as resolution, watermark, and face detection.
5. Aim the camera at the subject, and pinch the screen to zoom out or spread the screen to zoom in if required.
6. Tap .

Recording Videos

To record a radio, do as follows:

1. Launch the Camera app.
2. Swipe left or right to the tab with .
3. Tap to do the following basic settings:
   - : Turn on or off the flash.
   - : Switch between the front-facing camera and rear-facing camera.
4. Tap in the upper right corner to do other settings, such as resolution and watermark.
5. Aim the camera at the subject, and pinch the screen to zoom out or spread the screen to zoom in if required.

6. Tap to start recording.

7. (Optional) Tap to pause, and then tap to continue.

8. Tap to stop recording.

Taking Panorama Photos

To take a panorama photo, do as follows:

1. Launch the Camera app.

2. Swipe left or right to the tab for taking a panorama photo.

3. Tap the panorama camera icon.

4. Pan slowly in the required direction.

7.4.2 Gallery

The Gallery app allows you to view and manage pictures and videos.

Viewing Pictures and Videos

To view a picture or video, do as follows:

1. Launch the Gallery app.

2. Tap , and then tap one of the following options to select the view mode:

   - **All**: View pictures and videos organized by date.
   - **Albums**: View pictures and videos organized by album.

3. Depending on the view mode, either tap a picture or video to view it, or first tap an album or folder and then tap a picture or video.

4. (Optional) Swipe left or right to view the next or previous picture or video.

While viewing a picture, you can tap the screen, and then tap **More** to do the following operations:

- **Move to Folder**: Move the picture into an existing or a new folder.
- **Edit**: View and use the editing tools.
- **Set picture as**: Set the picture as a contact avatar or the wallpaper.
- **Slideshow**: Start a slideshow with the pictures and videos in the current folder.
- **Details**: View information about the picture, including the title, time, and properties.

Zooming In and Out

To zoom in or out a picture, do one of the following:

- Double-tap anywhere on the screen.
- Spread two fingers apart on any place to zoom in, and pinch the screen to zoom out.

Deleting Pictures and Videos

To delete an image or a video, tap **Delete** while viewing it.

To delete all pictures and videos in a folder, do as follows:

1. Tap , and then tap **Albums**.
2. Touch and hold the folder to be deleted until it is selected.
3. Tap **Delete**, and then tap **OK**.

7.4.3 Clock

The Clock app allows you to access alarms, view the world clock, set a stopwatch, and use a timer.

Using the Alarm

The Alarm feature allows you to set an alarm to ring at a specific time.

To create an alarm, do as follows:

1. Launch the Clock app, and then tap .
2. Tap , and then drag the pointer to set the time for the alarm to sound.
3. Tap **OK**, and then tap the following items to set the alarm:
   - **Repeat**: Tap the days on which you want the alarm to ring.
   - : Set the alarm tone.
   - **Vibrate**: Enable or disable alarm vibration.
   - **Label**: Add a label for the alarm.
4. Tap > **Settings** to set the following options:
   - **Silence after**: Set the period after which the alarm stops ringing.
   - **Snooze length**: Set a duration for the alarm while snoozing.
   - **Volume buttons**: Set the function of the **Smart Knob** when the alarm sounds. The following three options are available: **Snooze**, **Dismiss**, and **Do nothing**.

- **Start week on**: Set the beginning day of the week. The following three options are available: **Saturday**, **Sunday**, and **Monday**.

When the alarm sounds, swipe left to snooze or swipe right to dismiss the alarm.

To delete an alarm, tap , and then tap . If you want to cancel the deletion, tap **UNDO** instead.

Using the World Clock

The World Clock feature allows you to keep track of the current time in multiple cities around the world.

- To access the world clock, launch the Clock app, and then tap .
- To list a city on the world clock screen, tap , and then tap the city to select it.
- To remove a city from the list, tap , and then tap the city to deselect it.

Using the Timer

The Timer feature allows you to count down to an event based on a preset period.

To use a timer, do as follows:

1. Launch the Clock app, and then tap .
2. Tap the digits on the screen to set the length.
3. Tap to start the timer.

After the timer starts, you can do the following operations:

- Tap to pause the timer.
- Tap to delete the timer.
- Tap the icon in the lower right corner to add another timer.

If you create more than one timers, swipe up or down to view the timers.

Using the Stopwatch

The stopwatch feature allows you to measure intervals of time.

To use the stopwatch, do as follows:

1. Launch the Clock app, and then tap .
2. Tap to begin timing.
3. (Optional) Tap the icon in the lower left corner to measure another interval of time.
4. Tap to stop timing.

5. View the timing result on the screen, or tap to share the result.

6. Click to reset the stopwatch.

7.4.4 Calendar

The Calendar app allows you to consult the calendar by day, week, or month, create events, and set an alarm to act as a reminder.

Viewing the Calendar

To set the calendar view, do as follows:

1. Launch the Calendar app.

2. Tap the date in the upper left corner of the screen to display the following view options:

   - **Day**: Display the day view.
   - **Week**: Display the week view.
   - **Month**: Display the month view.
   - **Agenda**: Display the agenda view.

Setting the Calendar

To set the calendar, do as follows:

1. Tap > **Settings** > **General settings**.

2. Set the related options.

Creating an Event

To create an event on the calendar, do as follows:

1. Tap > **New event**.

2. Set the parameters as required.

3. Tap **DONE** in the upper right corner.

Deleting an Event

To delete an event from the calendar, do as follows:

1. Tap > **Delete events**.

2. Tap the event to be deleted.

3. Tap , and then tap **OK**.

7.4.5 Browser

The Browser app allows you to access a web site.

- To set the browser, tap > **Settings**, and set the parameters following on-screen instructions.
- To access a web site, tap the address bar, enter the web address, and then tap **Go** on the on-screen keypad.
- To open a new tab, tap > , and enter the new web address.
- To close a tab, tap , swipe up or down to view the tab, and then tap .
- To bookmark the current web page, tap > **Save to bookmarks**.
- To view bookmarks, tap > **Bookmarks**.

7.4.6 Calculator

The Calculator app facilitates basic and advanced arithmetic operations.

To perform basic arithmetic operations, do as follows:

1. Launch the Calculator app.
2. Enter the first number using the on-screen numeric keypad.
3. Tap the appropriate arithmetic function key.
4. Enter the next number.
5. Tap the equal sign to view the result.

To perform advanced arithmetic operations, swipe left from the edge of the calculator screen.

7.4.7 Compass

The Compass app allows you to find a direction and see your latitude, longitude, and altitude.

To use the compass, do as follows:

1. Launch the Compass app.
2. Hold the radio flat in your palm.
3. Follow the on-screen instructions when prompted to calibrate.
4. View the information on the compass screen.

7.4.8 Sound Recorder

The Sound Recorder app allows you to record an audio file and share it.

To record an audio file, do as follows:

1. Launch the Sound Recorder app.
2. Tap **Record**, and then speak into the microphone.
3. Tap **Done** to stop recording.

To share an audio file, tap **File**, tap the audio file, and then tap **Share**.

7.4.9 App Store

The App Store allows you to download apps to your radio.

- To view app messages, tap **Messages**.
- To view apps, tap **App Store**, tap **Cat** in the upper left corner, and then tap **All**, **Top charts**, and **Latest** as required.
- To search an app, tap App Store > , and enter the keyword.
- To manage downloaded apps, tap **Management**.

7.5 Power Level

The radio can operates at one of the following power levels:

- **High Power**: Enables communication with distant radios but consumes more battery power.
- **Low Power**: Enables communication with close radios and saves battery power.

To set the power level in trunking mode, go to **Settings** > **General** > **Private** > **Power Level**, and then tap **High** or **Low**.

To set the power level for a channel in conventional mode, go to **Contacts** > **Manage**, tap the channel, and then tap **Transmission Power** > **Low Power** / **High Power**.

7.6 Radio over IP (RoIP)

When the radio operating in trunking mode is out of the trunking network coverage, the RoIP feature allows you to enjoy smooth trunking services over an RoIP network.

To turn on or off this feature, go to **Settings** > **Private** > **RoIP**, and then tap **RoIP**.

To set the RoIP network, go to **Settings** > **Private** > **RoIP Settings**. For details, please consult your dealer.

7.7 Scan

7.7.1 Scan in Conventional Mode

In conventional mode, the Scan feature allows you to listen to activities on other channels, keeping a track of your team members. With this feature enabled, the radio searches the scan list preset for the current channel and stay on a channel with activities.

To turn the Scan feature on or off, go to **Settings** > **Private**, and then tap **Scan**.

To select a scan list for a channel, do as follows:

1. Go to **Contacts** > **Manage**, and then tap the target channel.
2. Tap **Scan List**, and then tap the required scan list.
3. Tap **OK**.

7.7.2 Scan in Trunking Mode

In trunking mode, the radio must register with a base station (BS) for normal operation. The Scan feature allows the radio to:

- Hunt through the Trunked Station Control Channels (TSCCs) for an available BS for registration.
- Always work under a BS with a higher RSSI value after registration, ensuring smooth communication.

Turning the Background Hunt Feature On or Off

The Background Hunt feature allows the radio in standby mode to keep detecting the signal strength of the current BS. If the signal strength goes below the preset threshold, the radio switches to another BS with higher signal strength.

To turn this feature on or off, go to **Settings** > **Private** > **Scan** > **Handover**, and then tap **Background Hunt**.

Turning the Handover Feature On or Off

The Handover feature prevents call drops or discontinuous voice caused by low signal strength. With this feature enabled, if the signal strength of the current BS goes below the preset threshold during a call, the radio automatically switches another BS with higher signal strength.

To turn this feature on or off, go to **Settings** > **Private** > **Scan** > **Handover**, and then tap **HandOver**.

7.8 Roam

The Roam feature allows you to enjoy seamless communication across sites or networks.

In conventional mode, you can turn this feature on or off as follows: go to **Settings** > **Private**, and then tap **Roaming**.

In trunking mode, this feature needs to be turned on or off by your dealer.

7.9 Position

The Position feature provides location information.

To turn this feature on or off, go to **Settings** > **General** > **Privacy & Security** > **Security** > **Location**, and then tap **GPS**.

To view your location information, go to **Settings** > **General** > **Privacy & Security** > **Security** > **Location** > **Location Service**.

7.10 Analog Services

The following features are available only on analog channels in conventional mode.

7.10.1 Turning the Monitor Feature On or Off

The Monitor feature allows the radio to receive weak signals in case of low signal strength.

To turn this feature on or off, press the preset **Monitor** key.

7.10.2 Turning the Squelch On Feature On or Off

The Squelch On feature allows the radio's speaker to keep turned on no matter whether the squelch condition is satisfied.

To turn this feature on or off, press the preset **Squelch On** key.

7.10.3 Setting the Squelch Level

The squelch level refers to the squelch threshold required for the radio's speaker to be turned on.

To set the squelch level for a channel, do as follows:

1. Go to **Contacts** > **Manage**, and then tap the target channel.
2. Tap **Squelch Level**, and then tap **Open**, **Normal**, or **Tight** (from low to high) as required.

Generally, a higher squelch level requires a higher RSSI value. If the squelch level is set to **Open**, the speaker will

always keep turned on.

7.11 Encryption

The Encryption feature prevents eavesdropping on calls and interception of data.

To turn this feature on or off, go to **Settings** > **PMR**, and then tap **Encryption**.

7.12 Stun

When being stunned, the radio displays . In this case, you can only turn the radio on or off.

To restore normal operation, contact your dealer.

7.13 Kill

When being killed, the radio displays . In this case, the radio is restored to factory settings, and you can only turn the radio on or off.

To restore normal operation, contact your dealer.

8. Troubleshooting

Phenomena	Analysis	Solution
The radio cannot be turned on.	The battery may be installed improperly.	Remove and reattach the battery.
	The battery power may run out.	Recharge or replace the battery.
	The battery may suffer from poor contact caused by dirtied or damaged battery contacts.	Clean the battery contacts or replace the battery.
The radio cannot register.	The radio may not detect signals from the BS.	Make sure the radio is within the coverage of the BS.
	The radio may not be authorised.	Contact the BS manager to check if the radio is authorised in the network management system.
The radio registers repeatedly.	The signal may be intermittent.	Make sure the radio is within the coverage of the BS.
The radio cannot establish a call.	The signal may be weak.	Make sure the radio is within the coverage of the BS.
The called party disconnects repeatedly during communication.	The signal may be intermittent or weak.	Make sure the radio is within the coverage of the BS.
The voice is unclear.	The signal may be weak.	Make sure call participants are within the communication range.
During receiving, the voice is weak, discontinuous or totally inactive.	The battery voltage may be low.	Recharge or replace the battery.
	The volume level may be low.	Increase the volume.
	The antenna may be loose or may be installed incorrectly.	Turn off the radio, and then remove and reattach the antenna.
	The speaker may be blocked.	Clean the surface of the speaker.
You cannot communicate	The frequency or signaling type may be	Verify your TX/RX frequency and

Phenomena	Analysis	Solution
with other group members.	inconsistent with that of other members.	signaling type are correct.
	The channel type (digital or analog) may be set incorrectly.	Verify you are on the correct digital or analog channel.
	You may be too far away from other members.	Move towards other members.
You hear unknown voices or noise.	You may be interrupted by radios using the same frequency.	Change the frequency, or adjust the squelch level.
	The radio in analog mode may be set with no signaling.	Set signaling for all radios operating at the same frequency to avoid interference.
You are unable to hear anyone because of too much noise and hiss.	You may be too far away from other members.	Move towards other members.
	You may be located in an unfavorable position. For example, your communication may be blocked by high buildings or blocked in an underground area.	Move to an open and flat area, restart the radio, and try contacting again.
	It could be the result of external disturbance (such as electromagnetic interference).	Stay away from equipment that may cause interference.
The GPS cannot locate your position.	GPS signals may not be received due to unfavorable position.	Move to an open and flat area, and try again.
You cannot use the keys.	The keypad may fail to function temporarily.	Restart the radio.
The LCD does not display any information.	The LCD may fail to function temporarily.	Restart the radio.

If the above solutions cannot fix your problems, or you may have some other queries, please contact your local dealer for more technical support.

9. Care and Cleaning

To guarantee optimal performance as well as a long service life of the product, please follow these tips.

Product Care

- Do not pierce or scrape the product.
- Keep the product far away from substances that can corrode the circuitry.
- Do not hold the product by the antenna or earpiece cable.
- Close the accessory connector cover when no accessory is in use.

Product Cleaning

Caution

Turn off the product and remove the battery before cleaning.

- Clean up the dust and fine particles on the product surface and charging piece with a clean and dry lint-free cloth or a brush regularly.
- Use neutral cleanser and a non-woven fabric to clean the keys, knobs, and front case after long-time use. Do not use chemical preparations such as stain removers, alcohol, sprays or oil preparations, so as to avoid surface case damage.
- If the radio is used in a harsh environment (such as sea and salt frog), periodically clean and dry the radio.
- Make sure the product is completely dry before use.

10. Optional Accessories

Contact your local dealer for the optional accessories used with the product.

Caution

Use the approved accessories only. We will not be liable for any loss or damage arising out of the use of any unauthorised accessories.

11. Specifications

General	
Dimensions (H x W x D) (with battery and without antenna)	150.1 mm x 68 mm x 25.3 mm
Weight (with battery and antenna)	≤ 380 g
Battery	2900 mAh Li-ion battery
Operating Voltage	DC 7.4±1 V
Operating Temperature	–20°C to +50°C
Storage Temperature	–40°C to +85°C
Humidity	95% RH
United States Military Standard	MIL-STD-810 C/D/E/F/G
Electrostatic Discharge (ESD)	IEC 61000 Level 3
Water & Dust Protection	IP67
Embedded Storage	32 MB Nor Flash
TF External Storage/Encryption Card	16 GB (Max), third-party encryption supported
SIM Encryption Card	Third-party encryption supported
Audio Output Power	2 W@8 Ω (rated), 3 W (Max)
Audio Distortion	≤ 1% (Rated), ≤ 5% (Max)
Microphone	Number: 3, multi-mic noise reduction
BB	
Processor Operating Frequency	2.0 GHz
Touch Screen Size	4.0 inch
Touch Screen Resolution	800 x 480
RAM	3 GB
Embedded Storage	32 GB

TF External Storage Card	64 GB (Max)
Front-facing/Rear-facing Camera	13MP
Wireless Module	
Wi-Fi	802.11 b/g/n, 2.4 GHz
Bluetooth	Bluetooth 4.0 EDR
RFID	13.56 MHz
Positioning System	GPS/GLONASS/BDNSS/Galileo
Positioning Accuracy	< 5 m
Time to First Fix (TTFF)	Cold start: < 1 minute, hot start: < 10s
RF	
PDT	350-527MHz
2G	GSM 850/900/1800/1900 CDMA 1×RTT BC0
4G	TDD-LTE B38/B41 FDD-LTE B2 /B4/ B5/B7/B26