Preface

Thanks for your favor in our product. This manual is helpful for you to quickly know how to use the product. To avoid body injury or property loss caused by misoperation, please read the *Safety Information Booklet* carefully before use.

This manual is applicable to the following product:

PD46X Digital Mobile Radio (X may represent 0, 2, 5, 6 or 8)

Icon Conventions

- : Indicates functions that are available on digital channel only.
- : Indicates functions that are available on analog channel only.

Functions marked with no icon are available on both analog and digital channels.

Disclaimer

Hytera Communications Corporation Limited (the Company) endeavors to achieve the accuracy and completeness of this manual, but no warranty of accuracy or reliability is given. All the specifications and designs are subject to change without notice due to continuous technology development. No part of this manual may be copied, modified, translated, or distributed in any manner without the express written permission of us.

We do not guarantee, for any particular purpose, the accuracy, validity, timeliness, legitimacy or completeness of the Third Party products and contents involved in this manual.

If you have any suggestions or would like to learn more details, please visit our website at: http://www.hytera.com.

FCC Statement

This equipment has been tested and found to comply with the limits for a Class B digital device, pursuant to part 15 of FCC Rules. These limits are designed to provide reasonable protection against harmful interference in a residential installation. This equipment generates and can radiate radio frequency energy and, if not installed and used in accordance with the instructions, may cause harmful interference to radio communications. However, there is no guarantee that interference will not occur in a particular installation. If this equipment does cause harmful interference to radio or television reception, which can be determined by turning the equipment off and on, the user is encouraged to try to correct.

The interference by one or more of the following measures:

- Reorient or relocate the receiving antenna. Increase the separation between the equipment and receiver.
- Connect the equipment into an outlet on a circuit different from that to which the receiver is connected.

● Consult the dealer or an experienced radio/TV technician for help

Operation is subject to the following two conditions: 1. This device may not cause harmful interference, and 2. This device must accept any interference received, including interference that may cause undesired operation.

Note:" Changes or modifications to this unit not expressly approved by the party responsible for compliance could void the user's authority to operate the equipment."

Compliance with RF Exposure Standards

Hytera's 2-way radio complies with the following RF energy exposure standards and guidelines:

· United States Federal Communications Commission, Code of Federal Regulations; 47 CFR §§ 1.1307, 1.1310 and 2.1093

• American National Standards Institute (ANSI) / Institute of Electrical and Electronic Engineers (IEEE) C95. 1-1992

• Institute of Electrical and Electronic Engineers (IEEE) C95.1-1999 Edition

RF Exposure Compliance and Control Guidelines and Operating Instructions

To control your exposure and ensure compliance with the occupational/controlled environment exposure limits always adhere to the following procedures.

Guidelines:

· Do not remove the RF Exposure Label from the device.

• User awareness instructions should accompany device when transferred to other users.

• Do not use this device if the operational requirements described herein are not met.

Operating Instructions:

• Transmit no more than the rated duty factor of 50% of the time. To transmit (talk), push the Push-To-Talk (PTT) button. To receive calls, release the PTT button. Transmitting 50 % of the time, or less, is important because this radio generates measurable RF energy exposure only when transmitting (in terms of measuring for standards compliance).

• Hold the radio in a vertical position in front of face with the microphone (and the other

parts of the radio, including the antenna) at least one inch (2.5 cm) away from the nose. Keeping the radio at the proper distance is important because RF exposures decrease with distance from the antenna. Antenna should be kept away from eyes.

• When worn on the body, always place the radio in a Hytera's approved clip, holder, holster, case, or body harness for this product. Using approved body-worn accessories is important because the use of Hytera's or other manufacturer's non-approved accessories may result in exposure levels, which exceed the FCC's occupational/controlled environment RF exposure limits.

· If you are not using a body-worn accessory and are not using the radio in the intended use position in front of the face, then ensure the antenna and the radio are kept at least 2.5 cm (one inch) from the body when transmitting. Keeping the radio at the proper distance is important because RF exposures decrease with increasing distance from the antenna.

• Use only manufacturer's name approved supplied or replacement antennas, batteries, and accessories. Use of non-manufacturer-name approved antennas, batteries, and accessories may exceed the FCC RF exposure guidelines.

•For a list of Hytera's approved accessories (see the user manual), or (visit the following website which lists approved accessories: www.hytera.cn)

• For a list of Hytera's approved accessories (see the user manual), or (visit the following website which lists approved accessories: www.hytera.cn

EU Regulatory Conformance

As certified by the qualified laboratory, the product is in compliance with the essential requirements and other relevant provisions of the Directive 1999/5/EC. Please note that the above information is applicable to EU countries only.

CE1313

Contents

1. Items in the Package **1**
2. Product Overview **3**
2.1 Product Controls 3
2.2 Programmable Keys 4
3. Before Use **5**
3.1 Attaching the Battery 5
3.2 Attaching the Antenna 5
3.3 Attaching the Belt Clip 5
3.4 Attaching the Accessories 6
3.5 Charging the Battery 7
4. Status Indications **9**
4.1 LCD Icon 9
4.2 LED Indicator 10
5. Menu Navigation **11**
6. Basic Operations **12**
6.1 Turning the Radio On/Off 12
6.2 Adjusting the Volume 12
6.3 Selecting a Zone 12
6.4 Selecting a Channel 12
6.5 Locking and Unlocking the Keypad 12
7. Call Services **14**
7.1 Call on Digital Channel 14
7.2 Call on Analog Channel 15
8. Features and Operations **16**
8.1 Home Screen 16
8.2 Managing the Contact 16
8.3 Message 16
8.4 Call Log 17
8.5 Scan 18
8.6 Setting the Radio 19
8.7 Device Information 21
8.8 One Touch Call 21
8.9 Time-out Timer (TOT) 22
8.10 Busy Channel Lockout 22
8.11 Monitor 22

8.12 CTCSS/ CDCSS 23
8.13 Squelch Off 23
8.14 TDMA Direct Mode 23
8.15 VOX 23
9. Troubleshooting 25
10. Care and Cleaning 27
11. Optional Accessories 28

1. Items in the Package

Please unpack carefully and check if all items listed below are received. If any item is missing or damaged, please contact your dealer.

	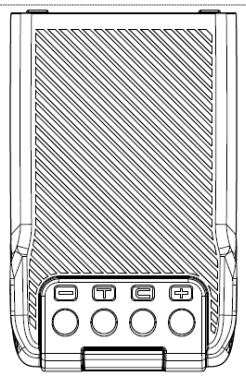	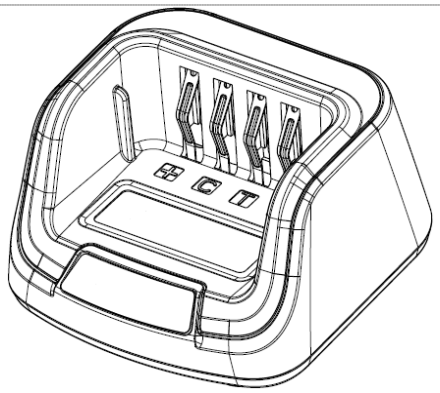
Radio	**Battery**	**Charger**
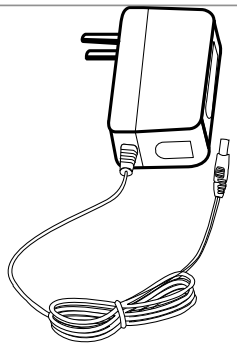		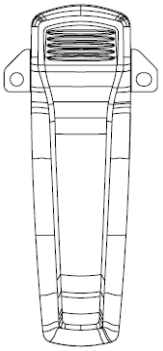
Power Adapter	**Antenna**	**Belt Clip**
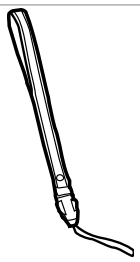	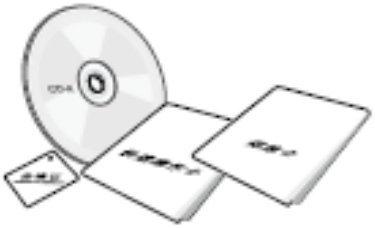	
Strap	**Documentation Kit**	

Note

The frequency band is marked on the label of antenna; if not, please refer to the label on the radio for frequency band information.

1. Product Overview

1.1 Product Controls

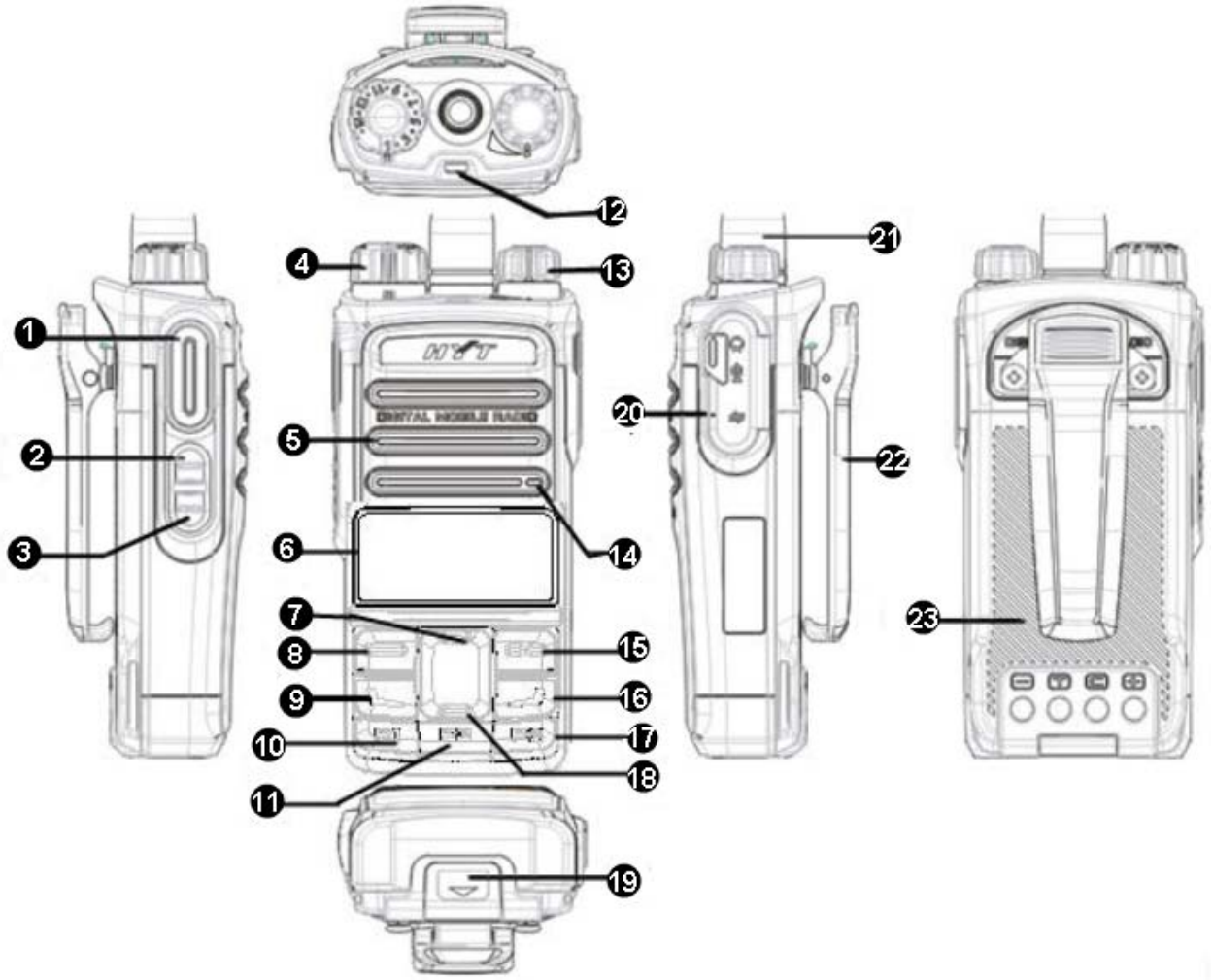

No.	Part Name	No.	Part Name
①	PTT (Push-to-Talk) Key	⑬	Power On/Off/Volume Control Knob
②	SK1 (Side Key 1)	⑭	Microphone
③	SK2 (Side Key 2)	⑮	Cancel/Return Key
④	Channel Selector Knob	⑯	Call End Key
⑤	Speaker	⑰	P3 Key
⑥	LCD Display	⑱	Down Key
⑦	Up Key	⑲	Battery Latch
⑧	OK/Menu Key	⑳	Accessory Connector
⑨	Call Key	㉑	Antenna

No.	Part Name	No.	Part Name
⑩	P1 Key	㉒	Belt Clip
⑪	P2 Key	㉓	Battery
⑫	LED Indicator	/	/

1.2 Programmable Keys

For enhanced convenience, you may request your dealer to program the **SK1**, **SK2**, **P1**, **P2** and **P3** keys as shortcuts to certain feature.

2. Before Use

2.1 Attaching the Battery

To attach the battery, do as follows.

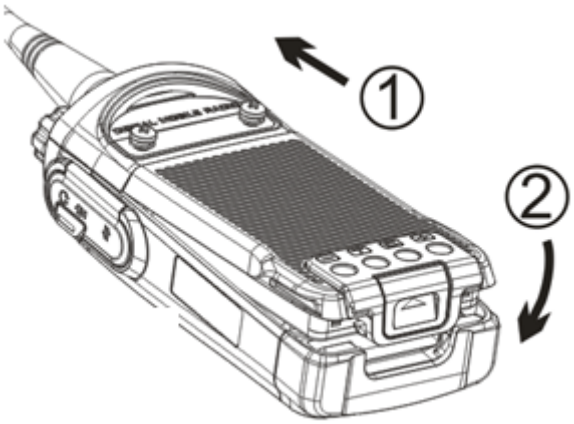

Note

To remove the battery, please turn off the radio first. Then slide the battery latch upwards to unlock the battery.

2.2 Attaching the Antenna

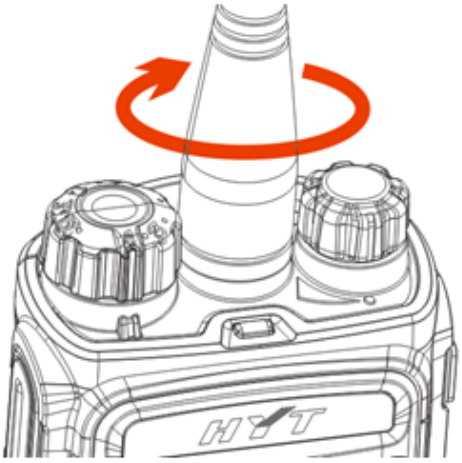

Caution

Do not hold the radio by its antenna, otherwise the performance and lifespan of the antenna will be reduced.

2.3 Attaching the Belt Clip

To attach the belt clip, do as follows.

Step 1 Remove the screws.

Step 2 Align the screw holes on the belt clip with those on the radio's back, and then tighten the screws.

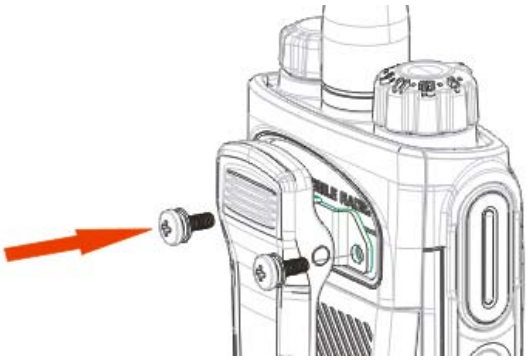

2.4 Attaching the Accessories

Step 1 Open the accessory connector cover as shown below.

Step 2 Align the accessory (such as an audio accessory, or a programming cable) plug with the accessory connector.

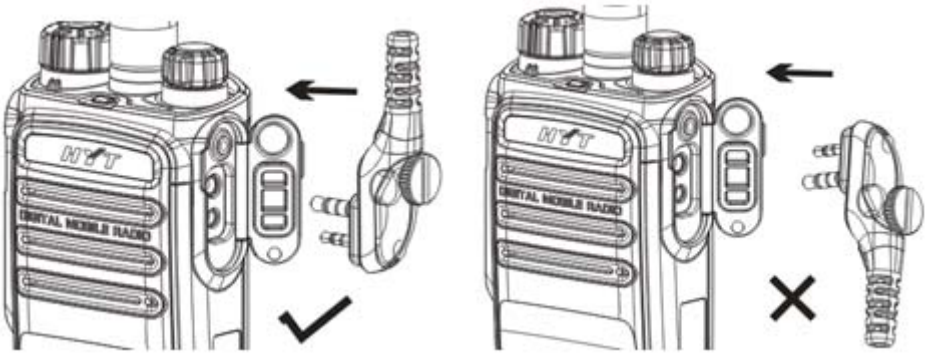

Step 3 Tighten the screw on the plug.

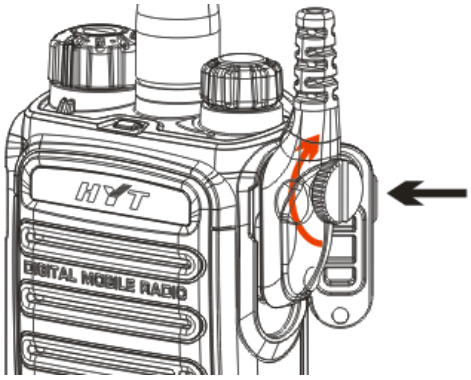

2.5 Charging the Battery

Caution

- Make sure the radio is powered off before charging. Read the *Safety Information Booklet* in advance to get necessary safety information.
- Charge a new battery for at least 5 hours before initial use for best performance.

Please use the charger specified by the Company to charge the battery. Charging Diagram is listed below.

Charging the radio (with battery attached) **Charging the battery**

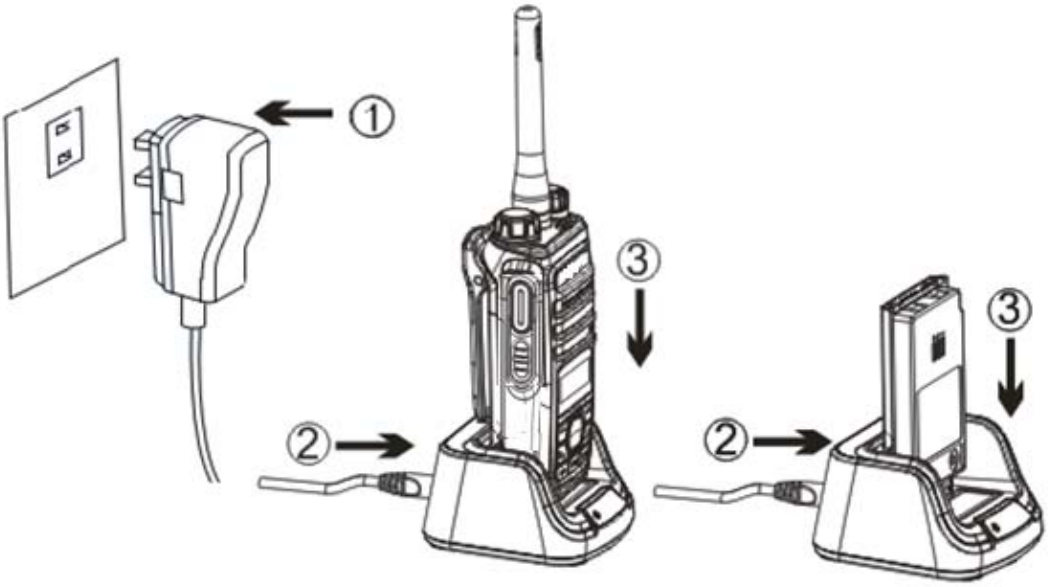

Charging Status Indication (on charger):

LED Indication	Charging Status
The LED Indicator flashes red slowly.	Standby (no load)
The LED Indicator	Charging

LED Indication	Charging Status
glows red.	
The LED Indicator glows orange.	90% charged
The LED Indicator glows green.	Fully charged
The LED Indicator flashes red rapidly.	Charging failure

3. Status Indications

3.1 LCD Icon

Name	Icon	Radio Status
Battery Power Icon		More bars indicate more battery power.
TX Power Icon		Low TX power for the current channel.
		High TX power for the current channel.
Accessory Icon		An accessory is connected.
Operation Mode Icon	DM	Direct Mode: Under this mode, the radio can communicate with each other directly.
	RM	Repeater Mode: Under this mode, the radio can communicate with each other via a repeater.
	TD MA	TDMA Direct Mode: Under this mode, two individual calls can be supported simultaneously in the 12.5 kHz channel.
Monitor Icon		The Monitor feature is active.
Hunt Icon		The radio is scanning.
		The radio stays on a non-priority channel.
		The radio stays on priority channel 1.
		The radio stays on priority channel 2.
Missed Call Icon		Missed call(s).
Message Icon		New message/unread message.
		Inbox is full.
RSSI Icon		No signal.
		More bars indicate stronger signal strength.
Speaker Icon		The speaker is unmuted.
Call/Contact Icon		● Indicates a private call in progress. ● Indicates a private contact in the contact list.

Name	Icon	Radio Status
		● Indicates a group call in progress. ● Indicates a group contact in the contact list.
		● Indicates an all call in progress. ● Indicates an all call contact in the contact list.

3.2 LED Indicator

LED Indication	Radio Status
The LED indicator flashes green.	Powering on
The LED indicator glows green.	Receiving
The LED indicator glows red.	Transmitting
The LED indicator flashes orange slowly.	Scanning
The LED indicator glows orange.	Call hang period. No voice is being transmitted or received on the traffic channel during a call. Within such period, you can hold down the **PTT** key to talk to the other party.

4. Menu Navigation

The following diagram outlines the menu structure of the radio. You can personalize menu option displayed in the radio via your dealer.

To select and confirm the options shown in the menu, press the **OK/Menu** key and then press the **Up** or **Down** key to select your needed option, finally press the **OK/Menu** key. This manual only describes the paths to the menus in terms of menu operations, for example, to access the contact list, go to “Contact -> Contact List”.

The radio supports menu reset function. If you do not operate the menu for a predefined time period set by the dealer, the radio will automatically return to the home screen. You may request your dealer to configure the auto reset time or disable the feature.

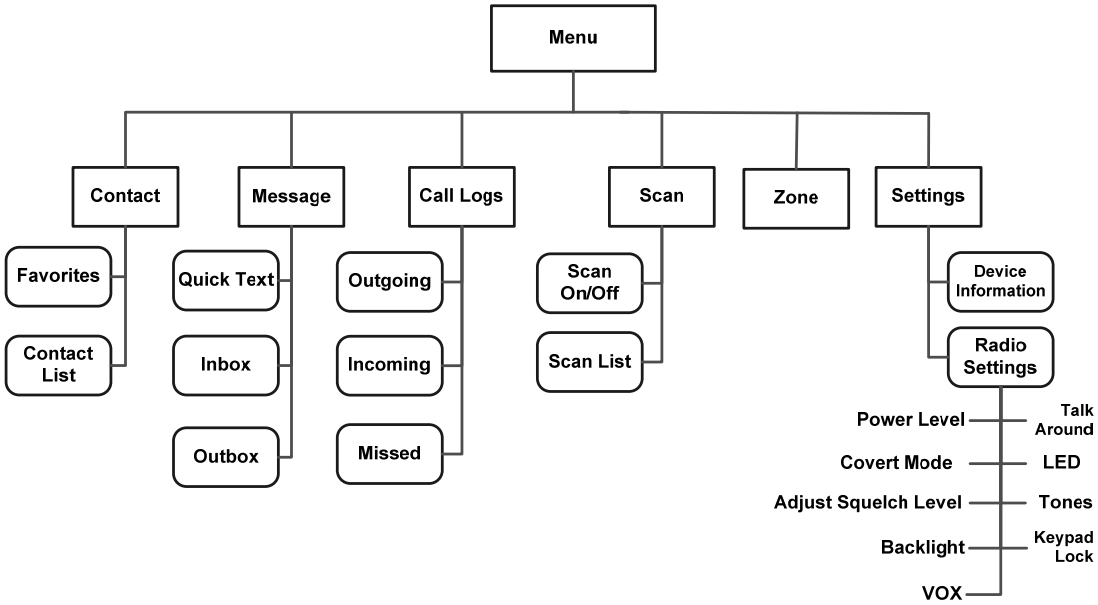

5. Basic Operations

5.1 Turning the Radio On/Off

To turn on the radio, rotate the **Power On/Off/Volume Control** knob clockwise until you hear a click. To turn off the radio, rotate the knob counter-clockwise until you hear a click.

If the Channel Notify upon Power-on feature is enabled by your dealer, the radio will announce the channel number upon power-on.

5.2 Adjusting the Volume

After the radio is powered on, you can rotate the **Power On/Off/Volume Control** knob clockwise to increase the voice volume, and rotate the knob counter-clockwise to decease it.

5.3 Selecting a Zone

A zone is a group of channels with the same property, which can facilitate convenient management over the channels. The radio supports 16 zones, each of which consists of up to 16 channels. You can select a zone through any of the following ways:

- Menu Operation: Go to “Menu -> Zone”, press the **Up** or **Down** key to select an appropriate zone, and then press the **OK/Menu** key to confirm it.
- Shortcut key: You can toggle to the appropriate zone by pressing the programmed **Zone Up** or **Zone Down** key preset by your dealer.

If the Zone Notify feature is enabled by your dealer, the radio will announce the zone number when selecting zone.

5.4 Selecting a Channel

After the radio is powered on, you can rotate the **Channel Selector Knob** to select an appropriate channel.

If the Channel Notify feature is enabled by your dealer, the radio will announce the channel number upon channel switching.

5.5 Locking and Unlocking the Keypad

When the keypad is not in use, you can lock the keypad to prevent accidental keypad operation. The following methods are available for you to lock or unlock the keypad:

- Key Combination: press the **OK/Menu** key and **P1** to lock the keypad; press Any Key and **P1** to unlock it.

Note

Any Key cannot be **PTT**, **SK1**, **Volume Up**/**Left**, **Volume Down**/**Right** and **Power On/Off/Esc** key.

- Shortcut key: Press the programmed **Keypad Lock** key to lock or unlock the keypad.
- Menu: Go to “Menu -> Settings -> Radio Set -> Keypad Lock” and then select “Enable” or “Disable”.
  - Enable: The keypad will be locked automatically if no operation is made within the preset time period. However, you can unlock the keypad via the key combination or the programmed **Keypad Lock** key mentioned above.
  - Disable: The keypad will not be locked automatically. However, you can lock or unlock the keypad via the key combination or **Keypad Lock** key mentioned above.

6. Call Services

After the radio is powered on, you can make and receive calls. To ensure optimal volume of the receiving radio, keep the microphone about 2.5 to 5 centimeters away from your mouth when transmitting.

- Private call: It is a voice call between one individual user and another individual user.
- Group call: It is a voice call between one individual user and a predefined group of users. All parties in the group can communicate with each other.
- All call: It is a one-way voice call from any user to all users on a channel.

6.1 Call on Digital Channel

You can initiate a private call, group call or all call (programmed by your dealer) through the same operations on digital channel. When calling back, the radio will make a call to the calling party in private call; but in group call, the radio will make a call to all parties involved when calling back. And you cannot call back in an all call.

Here takes the private call between Radio A and Radio B for example:

- Preset contact

Step 1 Radio A and B select the same digital channel.

You may preset a regular private call/group call/all call contact for each digital channel via your dealer.

Step 2 Radio A holds down the **PTT** key to initiate a call.

Step 3 By holding down the **PTT** key, Radio A can talk to the microphone when the LED indicator glows red and the radio displays the icon .

Step 4 Radio B can receive the call without any operation. When receiving, the LED indicator glows green and the radio displays the icon .

Step 5 Radio B can hold down the **PTT** key to talk when the LED indicator glows orange and the radio displays the icon .

If you do not respond to it, the radio will provide appropriate indications.

Step 6 Radio A can receive the call without any operation. When receiving, the LED indicator glows green and the radio displays the icon .

Step 7 Radio A can hold down the **PTT** key to talk when the LED indicator glows orange and the radio displays the icon .

- Contact List or Call Log

Step 1 Radio A and B select the same digital channel.

Step 2 Radio A accesses the contact list via menu “Contact -> Contact List”, “Contact -> Favorites” or “Call Log -> Outgoing/Incoming/Missed”.

Step 3 Radio A presses the **Up** or **Down** key to select Radio B.

Step 4 Radio A holds down the **PTT** key to initiate a call.

Step 5 By holding down the **PTT** key, Radio A can talk to the microphone when the LED indicator glows red and the radio displays the icon .

Step 6 Radio B can receive the call without any operation. When receiving, the LED indicator glows green and the radio displays the icon .

Step 7 Radio B can hold down the **PTT** key to talk when the LED indicator glows orange and the radio displays the icon .

If you do not respond to it, the radio will provide appropriate indications.

Step 8 Radio A can receive the call without any operation. When receiving, the LED indicator glows green and the radio displays the icon .

Step 9 Radio A can hold down the **PTT** key to talk when the LED indicator glows orange and the radio displays the icon .

Note

The Call Hang Time (the duration of LED indicator glowing orange) is preset by your dealer. If neither party talk before this duration expires, the call will end.

6.2 Call on Analog Channel

The calling operations on the analog channel are the same as that on the digital channel. The difference is that the called parties are all the users on the channel, rather than the preset contact for the channel.

7. Features and Operations

7.1 Home Screen

Description

This feature allows the radio to return to the home screen directly.

Operation

To return to the home screen directly, press .

7.2 Managing the Contact

Contact allows you to manage your contacts via the menu, for example, viewing contact's information, adding new contacts, setting the most-used contacts and deleting contacts.

7.2.1 Contact List

Description

The Contact List is used to save Private Call/Group Call/All Call contacts information which is preset by the dealer.

Operation

- Go to "Menu -> Contact -> Contact List" to access the contact list.
- Press the programmed **Contact List** key to access the contact list.
- Press to access the contact list.

Under this sub-menu, you can view the contact details, edit or delete the private contacts.

7.2.2 Favorites

Description

Favorites allows you to add the frequently used contacts from Contact List.

Operation

- Go to "Menu -> Contact -> Favorites" to access the favorite contact list.
- Press the programmed **Favorite Contact List** key to access the favorite contact list.

In the "Favorites" menu, you can check the contact information, edit or delete the contacts.

7.3 Message

You can send the Quick Text message directly. In the inbox, you can reply, forward or delete the text message, and in the outbox you can also resend, forward or delete the message.

Go to "Menu -> Message" to configure the corresponding features.

Caution

Chinese messages are supported only between TD5 series radios.

7.3.1 Quick Text

Description

The radio supports a maximum of 10 Quick Text messages programmed by your dealer.

Operation

Go to “Menu -> Message -> Quick Text” and you can send the quick text directly.

7.3.2 Inbox

Description

The radio saves the received messages into the Inbox and gives every message a corresponding icon to indicate its status.

- : Read message.
- : Unread message.

The inbox can save up to 10 received messages. When the Inbox is full, the icon will appear on the LCD, and the earliest message will be overwritten by the latest one automatically.

Operation

Go to “Menu -> Message -> InBox” to enter the relevant screen.

7.3.3 Outbox

Description

The radio saves the sent messages into the Outbox.

The outbox can save up to 10 sent messages. When the OutBox is full, the earliest message will be overwritten by the latest one automatically.

Operation

Go to “Menu -> Message -> OutBox” to enter the relevant screen.

7.4 Call Log

Description

The radio keeps track of all recent outgoing, incoming and missed private calls only.

The radio can save up to 10 call entries in the Outgoing/Incoming/Missed list respectively. When any list is full, the earliest entry in the list will be overwritten by the latest one automatically.

Operation

Go to “Call Log -> Outgoing/Incoming/Missed” to enter the relevant screen.

You can select a call log and hold down the **PTT** key to make a call or delete it.

7.5 Scan

Scan allows you to search for channels with ongoing activities and listen to communication activities on other channels so that you can keep a close track of your team members.

7.5.1 Activating the Scan feature

Description

With the Scan feature enabled, the radio will scan all the channels in the scan list set for the current channel.

Operation

- Go to “Menu -> Scan -> Scan On” to enable the Scan feature.
- In the home screen, you can press the programmed **Scan** key to enable the Scan feature, or switch to a channel on which the Auto Scan feature is enabled via the CPS to enable the Scan feature.

After the feature is enabled, the radio will scan all the channels in the scan list set for the channel on which scanning starts. The scanning process is as follows:

Step 1 During scanning, the radio displays the icon , and the LED indicator flashes orange slowly.

Step 2 When activities are detected on a channel, the radio will stay on the channel to receive current activities, and the LED indicator will glow green.

If the radio stays on a non-priority channel, the radio will display the icon . If the radio stays on Priority Channel 1 or Priority Channel 2, it will display the icon or respectively.

Step 3 If you want to continue listening to the activities on the channel, press the programmed **Monitor** or **Squelch Off Momentary** key during scan stay.

Note

The radio cannot scan analog channel and digital channel at the same time.

7.5.2 Deactivating the Scan feature

Description

With the Scan feature disabled, the radio will stop scanning all the channels in the scan list set for the current channel.

Operation

- Go to “Menu -> Scan -> Scan Off” to disable the Scan feature.
- Press the programmed **Scan** key during scanning.

7.5.3 Setting the Scan List

Description

Scan List allows you to add channels, set priority channels and delete channels.

Operation

Go to “Menu -> Scan -> Scan List” to access the relevant screen.

The radio can support up to 16 scan lists. You can perform the following scan list settings:

- Add a channel

  Add a new channel into the active scan list.

- Set priority channel

  Set the selected channel as a priority channel or non-priority channel. If you are interested in activities on a channel, you can set it as a priority channel, which will be scanned more frequently than a non-priority channel.

  Each scan list can contain two priority channels at most. indicates Priority Channel 1, and indicates Priority Channel 2.

- Delete a channel

  Remove a channel from the active scan list. However, the first channel in the list cannot be deleted.

7.6 Setting the Radio

You can optimize performance of your radio via the following configuration according to your actual needs and preferences.

Go to “Settings -> Radio Settings” to configure the corresponding features.

7.6.1 Talk Around

Description

You can continue to communicate in DMO by pressing the programmed **Talk Around** key when the repeater malfunctions, or when the radio is out of the repeater’s coverage but still within the coverage of the other radio.

Operation

- Go to “Menu -> Setting -> Radio Set -> Talk Around” to switch to direct mode.
- Press the programmed **Talk Around** key to enable the feature; press this key again to disable the feature.

7.6.2 Power Level

Description

-Power Level allows you to set the TX power level. High power can extend the signal coverage, enabling

you to communicate with farther radios. Generally, we recommend you to adopt low power for battery saving.

Operation

- Go to “Menu -> Setting -> Radio Set -> Power Level -> High/Low” to toggle the TX power level between high and low.
- Press the programmed **Adjust Power Level** key in the home screen to toggle the power level between high and low.
  - Audible alert:
    When you switch to high power, a high-pitched tone sounds;
    When you switch to low power, a low-pitched tone follows.
  - Visible alert:
    High power is indicated by H and low power is indicated by L.

7.6.3 Squelch Level Adjustment

Description

Squelch Level Adjustment allows you to adjust the squelch threshold required for the radio to be unmuted.

Generally, the higher squelch level requires stronger signal. If the squelch level is set to “Open” (squelch level: 0), the speaker will keep unmuted irrespective of the decoding conditions.

Operation

- Go to “Menu -> Setting -> Radio Set -> Squelch Level” to select “Open”, “Normal” or “Tight”.
- Press the programmed **Adjust Squelch Level** key to switch the level among “Tight”, “Normal” and “Open”.

When switching from “Tight” to “Open”, a low-pitched tone sounds followed by the background noise; from “Open” to “Normal”, a high-pitched tone sounds with the background noise fading; from “Normal” to “Tight”, a high-pitched tone sounds.

7.6.4 Backlight

Description

Backlight allows you to set the backlight on and off. Activating the backlight can illuminate the LCD and the keypad, so as to facilitate your operation under dim light conditions.

Operation

Go to “Settings -> Radio Set -> Backlight” to enable or disable this feature. There are three options:

- Off: The backlight will remain off.
- On: The backlight will remain on.

- Timed: The backlight will go out automatically if no operation is made or no signal is received within the time preset by your dealer.

7.6.5 LED

Description

This feature allows you to set whether to activate the LED indicator. You can set the LED indication for specific features such as TX, RX, Scan, Low Battery, and the like.

Operation

Go to “Settings -> Radio Set -> LED” to enable or disable this feature.

7.6.6 Tone

Description

This feature allows you to turn the tone on and off. If it is set to Silent, the radio will give no tones at all.

Operation

Go to “Menu -> Setting -> Radio Set -> Tone” to enable or disable this feature.

7.6.7 Covert Mode

Description

When Covert Mode is enabled, the radio will disable any visible or audible indications set by your dealer, such as the LED indicator, vibration and tone. This feature is mainly used in special missions.

Note

If an audio accessory is connected to the radio, the radio will output the voice and alert tones via the audio accessory when the Covert Mode is enabled.

Operation

- Go to “Menu -> Setting -> Radio Set -> Covert Mode” to enable or disable this feature.
- Press the programmed **Covert Mode** key to enable or disable this feature.

7.7 Device Information

Description

You can view basic information of the radio, including Radio ID, Radio Alias, Serial Number, Model Name, Frequency Range, Firmware Version, Radio Data Version, Boot Loader Version, etc.

Operation

Go to “Menu -> Setting -> Device Info.” to view the device information.

7.8 One Touch Call

Description

One Touch Call/ Menu allows you to make corresponding services by pressing the programmed **One**

Touch Call key preset by your dealer. The services are listed below:

- To initiate group calls or send text messages to the group contact.
- To initiate private calls or send messages to the private contact.

Operation

Service	Operation
To initiate private calls or group calls on the digital channel.	Press the **One Touch Call** key and then hold down the **PTT** key.
To send text messages	Press the programmed **One Touch Call** key.

7.9 Time-out Timer (TOT)

Description

Time-out Timer (TOT) allows you to set whether the radio will automatically terminate transmission and keep beeping when the TX time (60 seconds by default, and it is programmable via CPS) expires. To stop beeping, please release the **PTT** key. You must wait for a certain time period (preset by your dealer) before you can hold down the **PTT** key to transmit again. This feature is to prevent any user from occupying a channel for an extended period and to avoid radio damages due to overheat.

Operation

This feature needs to be programmed via CPS by your dealer.

7.10 Busy Channel Lockout

Description

Busy Channel Lockout can prevent radio user from interfering other transmitting radio users on the same channel. When the channel is busy, the radio will beep when you hold down the PTT key to transmit, indicating the channel is busy. You can hold down the **PTT** key to transmit when the channel is free.

Operation

This feature needs to be programmed via CPS by your dealer.

7.11 Monitor

Description

Monitor allows you to set whether the radio can receive the weak signals in order to monitor the radio.

Operation

Press the programmed **Monitor** key to enable the feature, then the radio displays the icon ; press this key again to disable the feature.

7.12 CTCSS/ CDCSS

Description

CTCSS/CDCSS allows the radio to add signaling with a frequency lower than that of the audio to the carrier. The speaker can be unmuted only when the CTCSS/CDCSS received by the receiving party is matched with that transmitted by the transmitting party.

Operation

Enable or disable this feature via CPS by your dealer.

7.13 Squelch Off

Description

With the Squelch Off Momentary feature enabled, your radio's speaker will keep unmuted no matter whether carrier is present.

Operation

Hold down the programmed **Squelch Off Momentary** key to enable the feature, then the radio displays the icon and sounds background noise. And release the key to disable the feature.

7.14 TDMA Direct Mode

Description

TDMA (Time Division Multiple Access) Direct Mode allows the radio to divide the 12.5 kHz channel into two alternative slots in direct mode. If the radio operates on a channel with this feature enabled and one time slot is already occupied, it can transmit and receive in the other free time slot.

Operation

Enable or disable this feature via CPS by your dealer. With this feature enabled, you can manually switch to a digital channel in TDMA Direct Mode or enter the TDMA Direct Mode by powering on the radio on a digital channel in TDMA Direct Mode. Under TDMA Direct Mode, the radio will display the icon TD MA.

7.15 VOX

Description

VOX allows you to trigger the voice transmission by speaking directly without holding down the **PTT** key. When the voice detected by the microphone (either external or internal microphone) reaches the volume to trigger the transmission, it will be transmitted automatically.

Caution

Follow the instructions below when using the VOX feature:

- To use the VOX feature with an external microphone, make sure the PTT/VOX switch is switched to “VOX” before the radio is powered on and the VOX feature is enabled.
- The VOX feature will be enabled for all the channels.
- The VOX feature settings will not remain unchanged when the radio is powered on and off.
- After the VOX feature is enabled, switching the PTT/VOX switch to “PTT” will disable the feature. In such case, switching the PTT/VOX switch to “VOX” will keep the radio transmitting. To make the radio function properly, reattach the earpiece to enable the feature again.

Operation

Activating or deactivating the VOX feature

- Go to “Menu -> Setting -> Radio Set -> VOX” to enable or disable this feature.
- Press the programmed **VOX** key.

Adjusting the VOX Gain Level

Go to “Menu -> Settings -> Radio Set -> VOX -> Gain Level” to adjust the transmission sensitivity.

Higher gain level can bring lower sensitivity and thus larger voice volume.

Note

Please adjust the VOX Gain Level properly to avoid unexpected VOX triggering due to high sensitivity or triggering failure due to low sensitivity.

8. Troubleshooting

Phenomena	Analysis	Solution
The radio cannot be powered on.	The battery may be improperly installed.	Remove the battery and reattach it.
	The battery power may run out.	Recharge or replace the battery.
	The battery may suffer from poor contact caused by dirtied or damaged battery contacts.	Clean the battery contacts. If the problem cannot be solved, contact your dealer or authorized service center for inspection and repair.
During receiving, the voice is weak, discontinuous or totally inactive.	The battery voltage may be low.	Recharge or replace the battery.
	The volume level may be low.	Increase the volume by pressing the **Volume Up/Right** key.
	The speaker may be blocked or damaged.	Clean the surface of the speaker. If the problem cannot be solved, contact your dealer or authorized service center for inspection and repair.
You cannot communicate with other members.	The frequency or signaling may be inconsistent with that of other members.	Set your TX/RX frequency and signaling to the same as that of other members.
	The channel type (digital and analog) may be set inconsistently.	Make sure all members are on the same digital/analog channel.
	You may be too far away from the group members.	Move towards other members.
Irrelevant communication or noise is heard on the channel.	You may be interrupted by radios using the same frequency.	Change the frequency, or adjust the squelch level.
	The radio may be set without signaling.	Set signaling for all member radios to avoid interference at the same frequency.

Phenomena	Analysis	Solution
The noise is too loud.	You may be too far away from other members.	Move towards other members.
	You may locate in an unfavorable position. For example, your communication may be blocked by high buildings or frustrated in the underground areas.	Move to an open and flat area, and restart the radio.
	You may suffer from external disturbance (such as electromagnetic interference).	Stay away from equipment that may cause interference.

If the above solutions cannot fix your problems, or you may have some other queries, please contact us or your local dealer for more technical support.

9. Care and Cleaning

To guarantee optimal performance as well as a long service life of the product, please follow the tips below.

Product Care

- Do not pierce or scrape the product.
- Keep the product far away from substances that can corrode the circuit.
- Do not hold the product by its antenna or earpiece cable directly.
- Attach the accessory connector cover when the accessory is not in use.

Product Cleaning

Caution

Turn off the product and remove the battery before cleaning.

- Clean up the dust and fine particles on the product surface and charging piece with a clean and dry lint-free cloth or a brush regularly.
- Use neutral cleanser and a non-woven fabric to clean the keys and front case after long-time use. Do not use chemical preparations such as stain removers, alcohol, sprays or oil preparations, so as to avoid surface case damage.
- Make sure the product is completely dry before use.

10. Optional Accessories

The following items are the main optional accessories for the product, and please consult your local dealer for more other accessories.

Caution

Use the accessories specified by the Company only. If not, the Company shall not be liable for any losses or damages arising out of use of unauthorized accessories.

- Power Supply: MCA08 MCU Multi-unit Rapid-rate Charger (for Li-Ion/Ni-MH batteries), CH10A06 Dual-Pocket MCU Charger Kit (for Li-Ion/Ni-MH battery, including Dual-Pocket Charger and Switching Power), PS7501 AC/DC Adaptor, MCA05 Battery Optimizing System, BL2010 2000mAh Li-Ion battery
- Audio: EAM13 2-wire Surveillance Earpiece with VOX & Transparent Acoustic Tube (Black), ESM14 Remote Earbud, EAM17 Remote Earpiece with Transparent Acoustic Tube, EHM20 Remote Swivel Earset, EHM19 Remote C-Earset, SM26M1 Remote Speaker Microphone, SM13M1 Remote Speaker Microphone (IP55)
- Cable: PC76 Programming & Download Cable
- Carrying Accessories: NCN011 Nylon Carrying Case (Half-folded)(Non-swivel)(Black), LCBN13 Universal Chest Pack (Nylon)(Black)