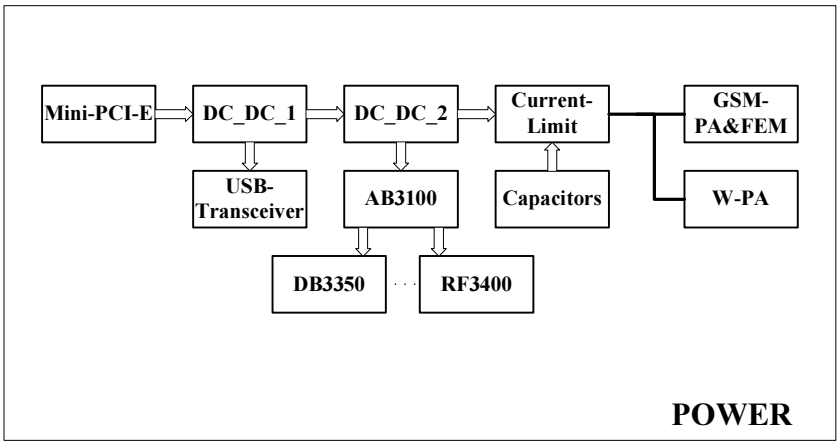
Mini-PCI-E
DC_DC_1
DC_DC_2
Current-Limit
GSM-PA&FEM
USB-Transceiver
AB3100
Capacitors
W-PA
DB3350
RF3400
POWER

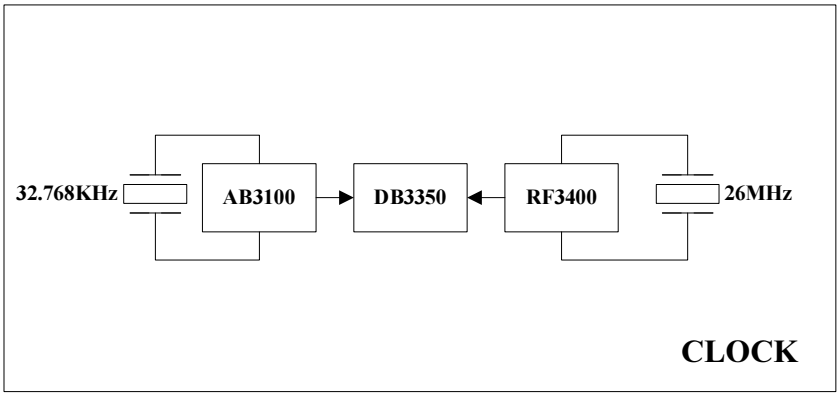
32.768KHz
AB3100
DB3350
RF3400
26MHz
CLOCK

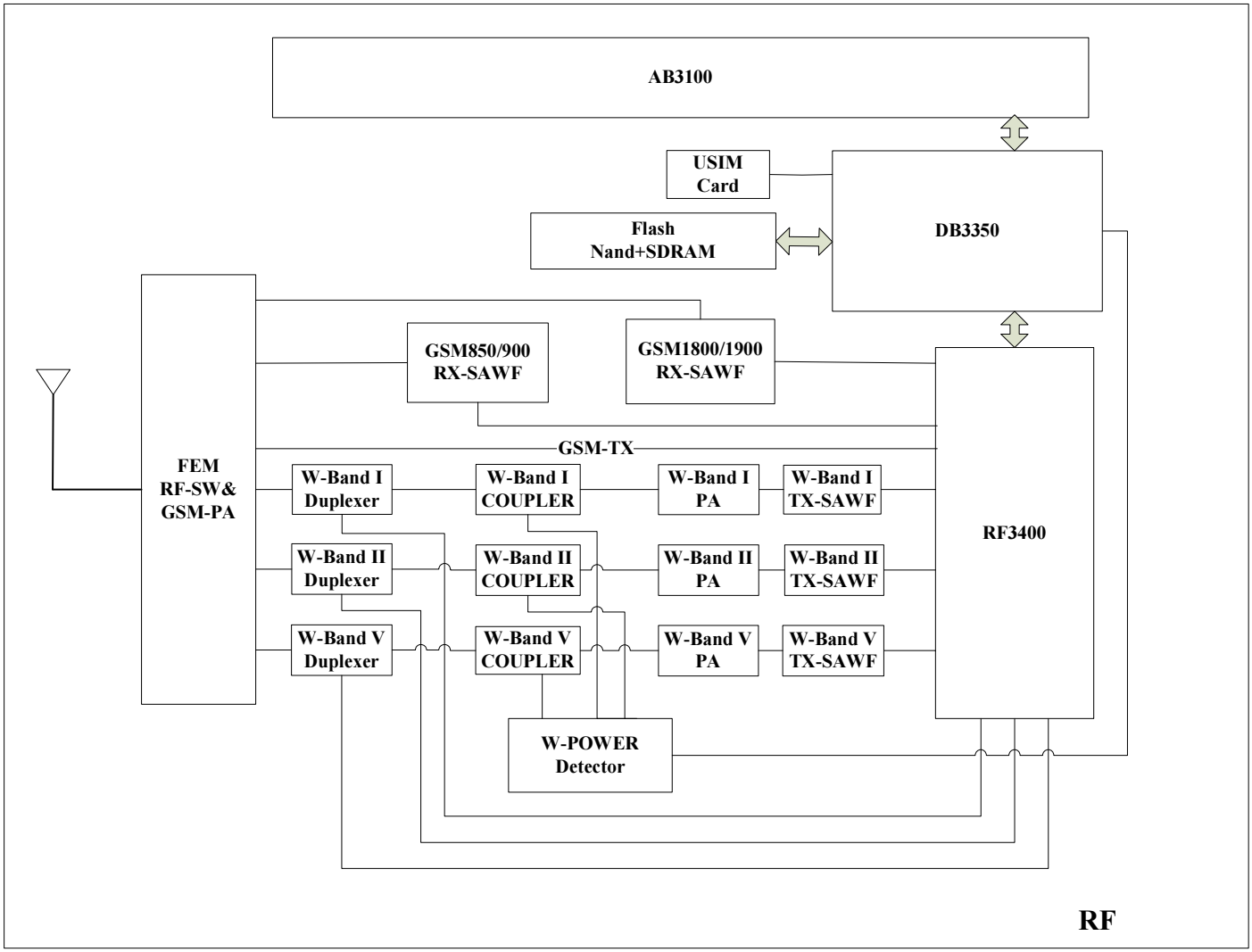
AB3100
USIM Card
Flash Nand+SDRAM
DB3350
GSM850/900 RX-SAWF
GSM1800/1900 RX-SAWF
GSM-TX
FEM RF-SW& GSM-PA
W-Band I Duplexer
W-Band I COUPLER
W-Band I PA
W-Band I TX-SAWF
W-Band II Duplexer
W-Band II COUPLER
W-Band II PA
W-Band II TX-SAWF
W-Band V Duplexer
W-Band V COUPLER
W-Band V PA
W-Band V TX-SAWF
RF3400
W-POWER Detector
RF