S T S L A B

FCC Part 15B TEST REPORT

Report No: STS1807043E01

Issued for

Canon Electronic Business Machines (H.K.) Co., Ltd.

17/F, Tower One, Ever Gain Plaza, 82-100 Container Port Road, Kwai Chung, New Territories, Hong Kong

Product Name:	Wireless Receiver
Brand Name:	Canon
Model Name:	D20D
Series Model:	N/A
FCC ID:	Y7J-D20D
Test Standard:	FCC Part 15B

Any reproduction of this document must be done in full. No single part of this document may be reproduced without permission from STS, All Test Data Presented in this report is only applicable to presented Test sample.

Shenzhen STS Test Services Co., Ltd.
1/F., Building B, Zhuoke Science Park, No.190, Chongqing Road,
Fuyong Street, Bao'an District, Shenzhen, Guangdong, China
TEL: +86-755 3688 6288 FAX: +86-755 3688 6277 E-mail:sts@stsapp.com

TEST RESULT CERTIFICATION

Applicant's name.....: Canon Electronic Business Machines (H.K.) Co., Ltd.

Address.....: 17/F, Tower One, Ever Gain Plaza, 82-100 Container Port Road, Kwai Chung, New Territories, Hong Kong

Manufacture's Name .....: Canon Electronic Business Machines (H.K.) Co., Ltd.

Address.....: 17/F, Tower One, Ever Gain Plaza, 82-100 Container Port Road, Kwai Chung, New Territories, Hong Kong

Product description

Product name.....: Wireless Receiver

Brand name.....: Canon

Model Name .....: D20D

Series Model ..... N/A

Standards.....: FCC Part 15B

Test procedure ..... ANSI C63.4-2014

This device described above has been tested by STS, and the test results show that the equipment under test (EUT) is in compliance with the FCC requirements. And it is applicable only to the tested sample identified in the report.

This report shall not be reproduced except in full, without the written approval of STS, this document may be altered or revised by STS, personal only, and shall be noted in the revision of the document.

Date of Test.....

Date of performance of tests ..... 04 July. 2018~10 July. 2018

Date of Issue..... 11 July. 2018

Test Result ..... **Pass**

Testing Engineer : Barry Li

(Barry Li)

Technical Manager : Chopin. Xiao

(Chopin Xiao)

Authorized Signatory : Vita Li

(Vita Li)

TESTING CONSULTING SOLUTION CERTIFICATION STS APPROVAL

Table of Contents

1. SUMMARY OF TEST RESULTS **5**
1.1 TEST FACTORY 5
1.2 MEASUREMENT UNCERTAINTY 5
2. GENERAL INFORMATION **6**
2.1 GENERAL DESCRIPTION OF EUT 6
2.2 DESCRIPTION OF TEST MODES 7
2.3 BLOCK DIGRAM SHOWING THE CONFIGURATION OF SYSTEM TESTED 8
2.4 DESCRIPTION OF SUPPORT UNITS 9
2.5 EQUIPMENTS LIST FOR ALL TEST ITEMS 10
3. EMC EMISSION TEST **11**
3.1 CONDUCTED EMISSION MEASUREMENT 11
3.2 RADIATED EMISSION MEASUREMENT 15

Revision History

Rev.	Issue Date	Report NO.	Effect Page	Contents
00	11 July. 2018	STS1807043E01	ALL	Initial Issue

1. SUMMARY OF TEST RESULTS

Test procedures according to the technical standards:

EMISSION			
Standard	Item	Result	Remarks
FCC 47 CFR Part 15 Subpart B	Conducted Emission	PASS	Meet Class B limit
	Radiated Emission	PASS	Meet Class B limit

NOTE:

(1) ” N/A” denotes test is not applicable in this Test Report

1.1 TEST FACTORY

Company Name:	Shenzhen STS Test Services Co. Ltd.
Address:	1/F., Building B, Zhuoke Science Park, No.190, Chongqing Road, Fuyong Street, Bao’an District, Shenzhen, Guangdong, China
Telephone:	+86-755 3688 6288
Fax:	+86-755 3688 6277
Registration No.:	CNAS Registration No.: L7649; FCC Registration No.: 625569
	IC Registration No.: 12108A; A2LA Certificate No.: 4338.01;

1.2 MEASUREMENT UNCERTAINTY

The reported uncertainty of measurement y ± U，where expended uncertainty U is based on a standard uncertainty multiplied by a coverage factor of k=2，providing a level of confidence of approximately 95 %。

No.	Item	Uncertainty
1	Conducted Emission (9KHz-150KHz)	±2.88dB
2	Conducted Emission (150KHz-30MHz)	±2.67dB
3	All emissions,radiated(<30M) (9KHz-30MHz)	±2.45dB
4	All emissions,radiated(<1G) 30MHz-200MHz	±3.73dB
5	All emissions,radiated(<1G) 200MHz-1000MHz	±3.92dB
6	All emissions,radiated(>1G)	±3.31dB

2. GENERAL INFORMATION

2.1 GENERAL DESCRIPTION OF EUT

Product Name	Wireless Receiver	
Brand Name	Canon	
Model Name	D20D	
Series Model	N/A	
Model Difference	N/A	
Test sample number	180704008	
Frequency Bands	2.4GHz	2405, 2410, 2415, 2420, 2425, 2430, 2435, 2440, 2445, 2460 MHz
Modulation Mode	2.4GHz	GFSK
Hardware version number	R000	
Software version number	V02	

Note: For a more detailed features description, please refer to the manufacturer's specifications or the User's Manual.

2.2 DESCRIPTION OF TEST MODES

To investigate the maximum EMI emission characteristics generates from EUT, the test system was pre-scanning tested base on the consideration of following EUT operation mode or test configuration mode which possible have effect on EMI emission level. Each of these EUT operation mode(s) or test configuration mode(s) mentioned above was evaluated respectively.

Pretest Mode	Description
Mode 1	USB port communication with PC

For Conducted Test	
Final Test Mode	Description
Mode 1	USB port communication with PC

For Radiated Test	
Final Test Mode	Description
Mode 1	USB port communication with PC

NOTE: The test modes were carried out for all operation modes. Only worst case will be show in this report..

2.3 BLOCK DIGRAM SHOWING THE CONFIGURATION OF SYSTEM TESTED

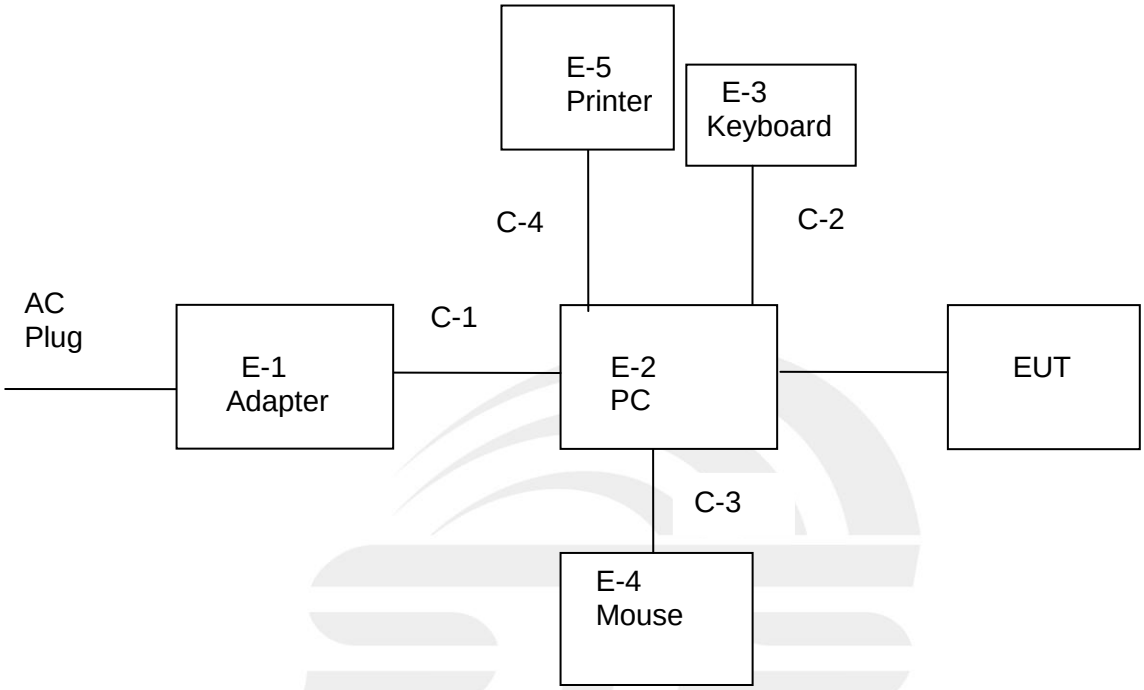

2.4 DESCRIPTION OF SUPPORT UNITS

The EUT has been tested as an independent unit together with other necessary accessories or support units. The following support units or accessories were used to form a representative test configuration during the tests.

Item	Equipment	Mfr/Brand	Model/Type No.
E-1	Adapter	HP	HSTNN-CA15
E-2	PC	HP	500-320cx
E-3	Keyboard	HP	PR1101U
E-4	Mouse	MOTOSPEED	F66
E-5	Printer	HP	HP1020

Item	Shielded Type	Ferrite Core	Length
C-1	Unshielded	NO	120cm
C-2	USB Cable (FTP)	NO	100cm
C-3	USB Cable (FTP)	NO	105cm
C-4	USB Cable (FTP)	NO	110cm

Note:

(1) The support equipment was authorized by Declaration of Confirmation.

(2) For detachable type I/O cable should be specified the length in cm in 『Length』 column.

(3) “YES” is means “shielded” “with core”; “NO” is means “unshielded” “without core”.

(4) PC is the FCC DOC is approved.

2.5 EQUIPMENTS LIST FOR ALL TEST ITEMS

The EUT has been tested as an independent unit together with other necessary accessories or support units. The following support units or accessories were used to form a representative test configuration during the tests.

Radiation Test equipment

Kind of Equipment	Manufacturer	Type No.	Serial No.	Last Calibration	Calibrated Until
EMI Test Receiver	R&S	ESCI	102086	2017.10.15	2018.10.14
Bilog Antenna	TESEQ	CBL6111D	34678	2017.11.02	2018.11.01
Horn Antenna	SCHWARZBECK	BBHA 9120D	1343	2017.10.27	2018.10.26
Spectrum Analyzer	Agilent	E4407B	MY50140340	2018.03.08	2019.03.07
Pre-mplifier(1G-18G)	Agilent	8449B	60538	2017.10.27	2018.10.26
Spectrum Analyzer	Agilent	N9020A	MY49100060	2018.03.08	2019.03.07
Pre-mplifier(0.1M-3GHz)	EM	EM330	--	2018.03.11	2019.03.10

Conduction Test equipment

Kind of Equipment	Manufacturer	Type No.	Serial No.	Last Calibration	Calibrated Until
EMI Test Receiver	R&S	ESPI	102086	2017.10.15	2018.10.14
LISN	R&S	ENV216	101242	2017.10.15	2018.10.14
LISN	EMCO	3810/2NM	23625	2017.10.15	2018.10.14
Absorbing clamp	R&S	MDS-21	100668	2017.10.19	2018.10.18

3. EMC EMISSION TEST

3.1 CONDUCTED EMISSION MEASUREMENT

3.1.1 POWER LINE CONDUCTED EMISSION Limits

FREQUENCY (MHz)	Conducted Emission Limits (dBuV)			
	Class A		Class B	
	Quasi-peak	Average	Quasi-peak	Average
0.15 -0.5	79.00	66.00	66 - 56 *	56 - 46 *
0.50 -5.0	73.00	60.00	56.00	46.00
5.0 -30.0	73.00	60.00	60.00	50.00

Note:

(1) The tighter limit applies at the band edges.

(2) The limit of " * " marked band means the limitation decreases linearly with the logarithm of the frequency in the range.

The following table is the setting of the receiver

Receiver Parameters	Setting
Attenuation	10 dB
Start Frequency	0.15 MHz
Stop Frequency	30 MHz
IF Bandwidth	9 kHz

3.1.2 TEST PROCEDURE

a. The EUT was 0.8 meters from the horizontal ground plane and 0.4 meters from the vertical ground plane with EUT being connected to the power mains through a line impedance stabilization network (LISN). All other support equipments powered from additional LISN(s). The LISN provide 50 Ohm/ 50uH of coupling impedance for the measuring instrument.
b. Interconnecting cables that hang closer than 40 cm to the ground plane shall be folded back and forth in the center forming a bundle 30 to 40 cm long.
c. I/O cables that are not connected to a peripheral shall be bundled in the center. The end of the cable may be terminated, if required, using the correct terminating impedance. The overall length shall not exceed 1 m.
d. LISN at least 80 cm from nearest part of EUT chassis.
e. For the actual test configuration, please refer to the related Item –EUT Test Photos.

3.1.3 DEVIATION FROM TEST STANDARD

No deviation

3.1.4 TEST SETUP

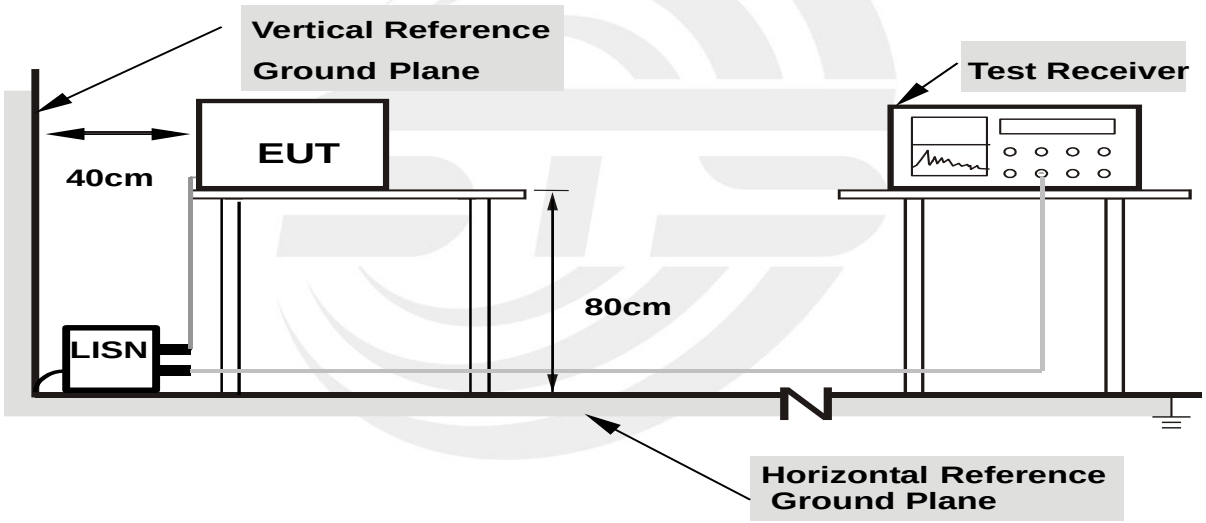

Note: 1.Support units were connected to second LISN.
2.Both of LISNs (AMN) are 80 cm from EUT and at least 80 from other units and other metal planes

3.1.5 EUT OPERATING CONDITIONS

The EUT was configured for testing in a typical fashion (as a customer would normally use it). The EUT has been programmed to continuously transmit during test. This operating condition was tested and used to collect the included data.

3.1.6 TEST RESULTS

Temperature:	24 ℃	Relative Humidity:	62.5%
Phase:	L	Test Mode:	Mode 1
Test Voltage:	DC 5V From PC		

No.	Frequency (MHz)	Reading (dBuV)	Correct Factor (dB)	Result (dBuV)	Limit (dBuV)	Margin (dB)	Detector
1	0.1500	45.27	9.79	55.06	66.00	-10.94	QP
2	0.1500	34.31	9.79	44.10	56.00	-11.90	AVG
3	0.1620	44.21	9.79	54.00	65.36	-11.36	QP
4	0.1620	30.72	9.79	40.51	55.36	-14.85	AVG
5	0.2060	37.24	9.81	47.05	63.37	-16.32	QP
6	0.2060	21.75	9.81	31.56	53.37	-21.81	AVG
7	0.5180	24.12	10.01	34.13	56.00	-21.87	QP
8	0.5180	12.82	10.01	22.83	46.00	-23.17	AVG
9	3.2820	22.40	9.82	32.22	56.00	-23.78	QP
10	3.2820	5.62	9.82	15.44	46.00	-30.56	AVG
11	9.0900	26.07	10.11	36.18	60.00	-23.82	QP
12	9.0900	15.74	10.11	25.85	50.00	-24.15	AVG

Remark:
1. All readings are Quasi-Peak and Average values.
2. Margin = Result (Result =Reading + Factor)–Limit
3. Factor= Cable Loss +Antenna Factor-Amplifier Gain

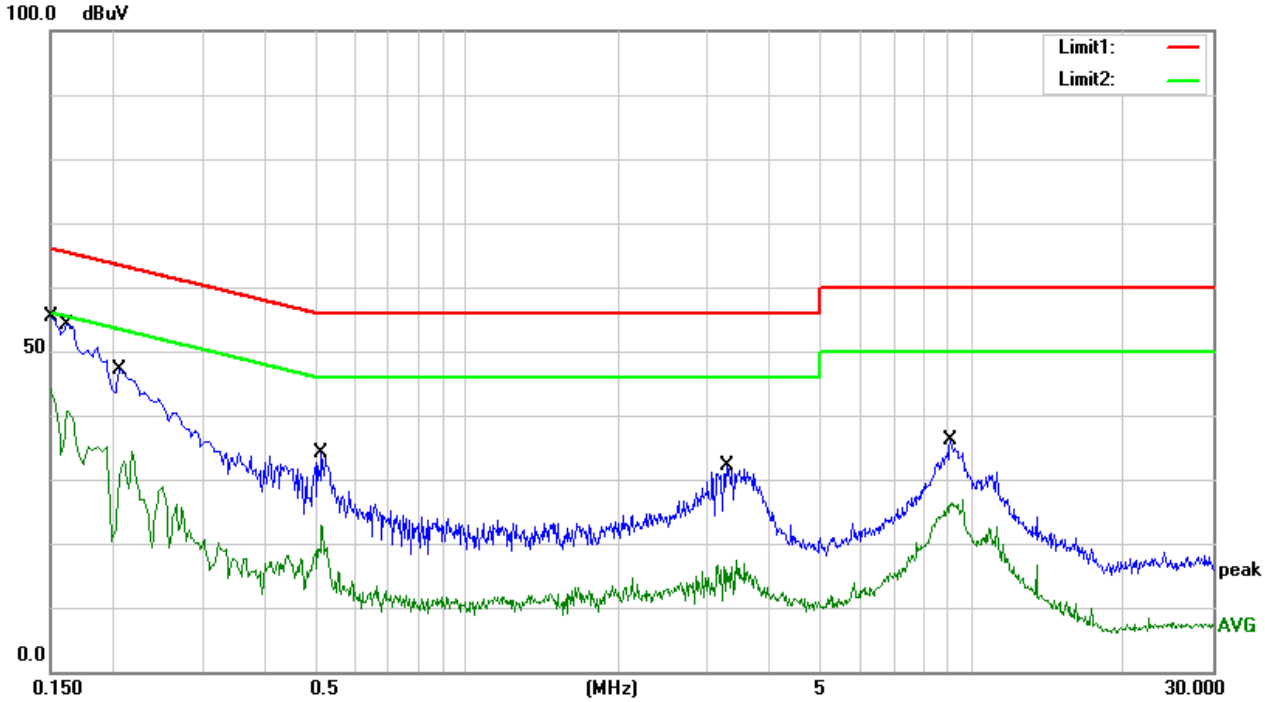

Temperature:	24 ℃	Relative Humidity:	62.5%
Phase:	N	Test Mode:	Mode 1
Test Voltage:	DC 5V From PC		

No.	Frequency (MHz)	Reading (dBuV)	Correct Factor (dB)	Result (dBuV)	Limit (dBuV)	Margin (dB)	Detector
1	0.1540	46.29	9.79	56.08	65.78	-9.70	QP
2	0.1540	28.44	9.79	38.23	55.78	-17.55	AVG
3	0.1860	42.78	9.78	52.56	64.21	-11.65	QP
4	0.1860	23.10	9.78	32.88	54.21	-21.33	AVG
5	0.2460	38.33	9.99	48.32	61.89	-13.57	QP
6	0.2460	19.11	9.99	29.10	51.89	-22.79	AVG
7	0.5300	23.34	10.00	33.34	56.00	-22.66	QP
8	0.5300	9.18	10.00	19.18	46.00	-26.82	AVG
9	3.7540	23.10	9.83	32.93	56.00	-23.07	QP
10	3.7540	8.77	9.83	18.60	46.00	-27.40	AVG
11	10.3220	29.26	10.21	39.47	60.00	-20.53	QP
12	10.3220	18.94	10.21	29.15	50.00	-20.85	AVG

Remark:
1. All readings are Quasi-Peak and Average values.
2. Margin = Result (Result =Reading + Factor)–Limit
3. Factor= Cable Loss +Antenna Factor-Amplifier Gain

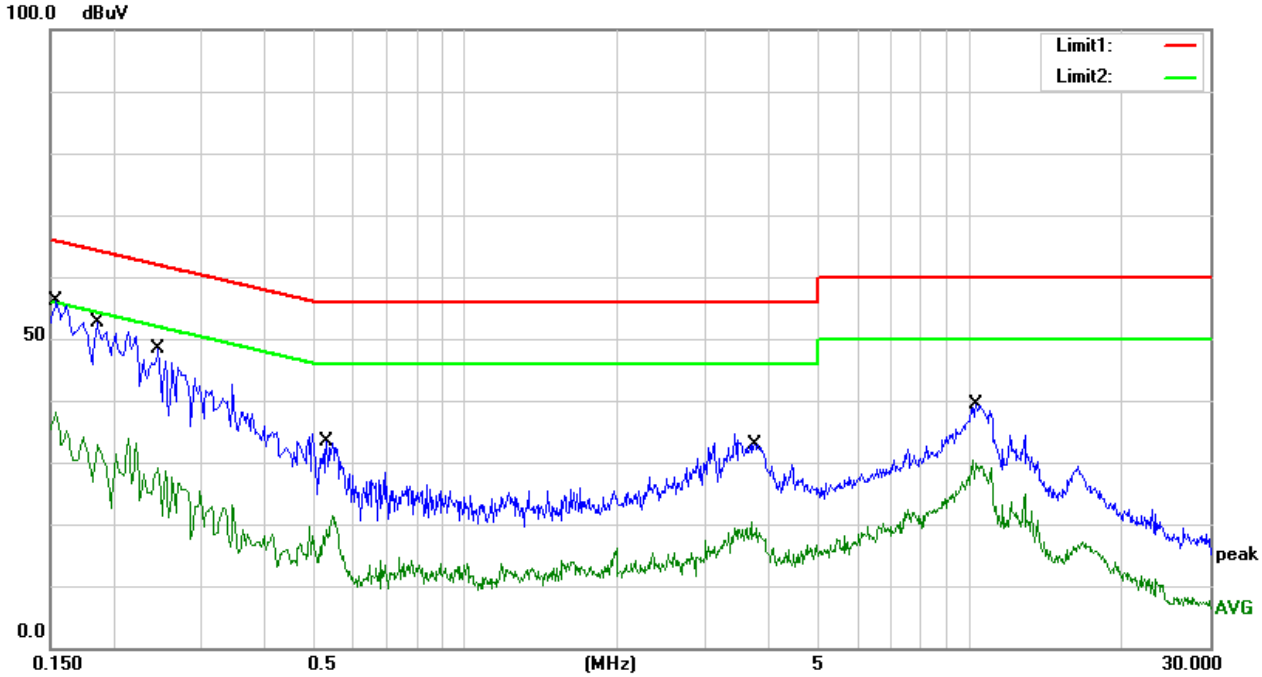

Note: The test voltage is 100-240V, both of which have assessment tests, and the worst test data is in the report.

3.2 RADIATED EMISSION MEASUREMENT

3.2.1 Radiated Emission Limits

In case the emission fall within the restricted band specified on 15.105(a)&109(a) limit in the table below has to be followed.

Frequencies (MHz)	Field Strength (micorvolts/meter)	Measurement Distance (meters)
30~88	100	3
88~216	150	3
216~960	200	3
Above 960	500	3

LIMITS OF RADIATED EMISSION MEASUREMENT

FREQUENCY (MHz)	Class A (dBuV/m) (at 3M)		Class B (dBuV/m) (at 3M)	
	PEAK	AVERAGE	PEAK	AVERAGE
Above 1000	80	60	74	54

Note:

(1) The limit for radiated test was performed according to FCC PART 15B.

(2) The tighter limit applies at the band edges.

(3) Emission level (dBuV/m)=20log Emission level (uV/m).

FREQUENCY RANGE OF RADIATED MEASUREMENT (For unintentional radiators)

Highest frequency generated or Upper frequency of measurement used in the device or on which the device operates or tunes (MHz)	Range (MHz)
Below 1.705	30
1.705 – 108	1000
108 – 500	2000
500 – 1000	5000
Above 1000	5th harmonic of the highest frequency or 40 GHz, whichever is lower

Spectrum Parameter	Setting
Attenuation	Auto
Detector	Peak
Start Frequency	1000 MHz(Peak/AV)
Stop Frequency	5th harmonic (Peak/AV)
RB / VB (emission in restricted band)	30MHz to 1000MHz: 100 KHz / 300 KHz Above 1000MHz: 1 MHz / 3 MHz

Receiver Parameter	Setting
Attenuation	Auto
Start ~ Stop Frequency	30MHz to 1000MHz: 100 KHz / 300 KHz Above 1000MHz: 1 MHz / 3 MHz

3.2.2 TEST PROCEDURE

a. The measuring distance of at 3 m shall be used for measurements at frequency up to 1GHz and above 1GHz.
b. The EUT was placed on the top of a rotating table 0.8 meters above the ground at a 3 meter anechoic chamber. The table was rotated 360 degrees to determine the position of the highest radiation.
c. the height of the antenna shall vary between 1m to 4 m. Both horizontal and vertical polarizations of the antenna are set to make the measurement.
d. The initial step in collecting conducted emission data is a spectrum analyzer peak detector mode pre-scanning the measurement frequency range. Significant peaks are then marked and then Quasi Peak detector mode re-measured.
e. If the Peak Mode measured value compliance with and lower than Quasi Peak Mode Limit, the EUT shall be deemed to meet QP Limits and then no additional QP Mode measurement performed.
f. For the actual test configuration, please refer to the related Item –EUT Test Photos.

Note: Both horizontal and vertical antenna polarities were tested and performed pretest to three orthogonal axis. The worst case emissions were reported

3.2.3 DEVIATION FROM TEST STANDARD

No deviation

3.2.4 TEST SETUP

（A）Radiated Emission Test-Up Frequency 30MHz~1GHz

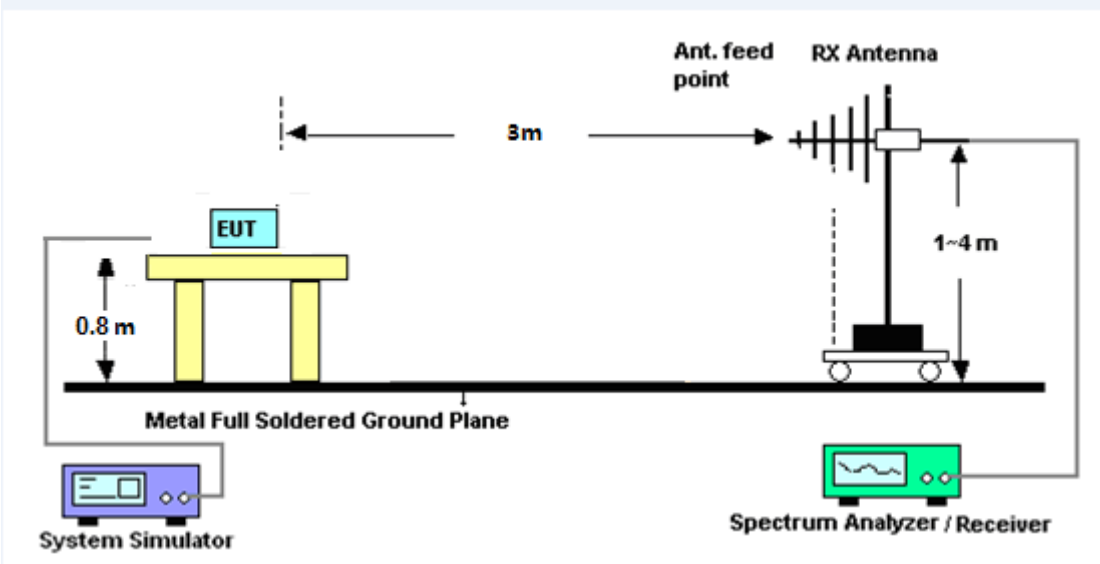

（B）Radiated Emission Test-Up Frequency Above 1GHz

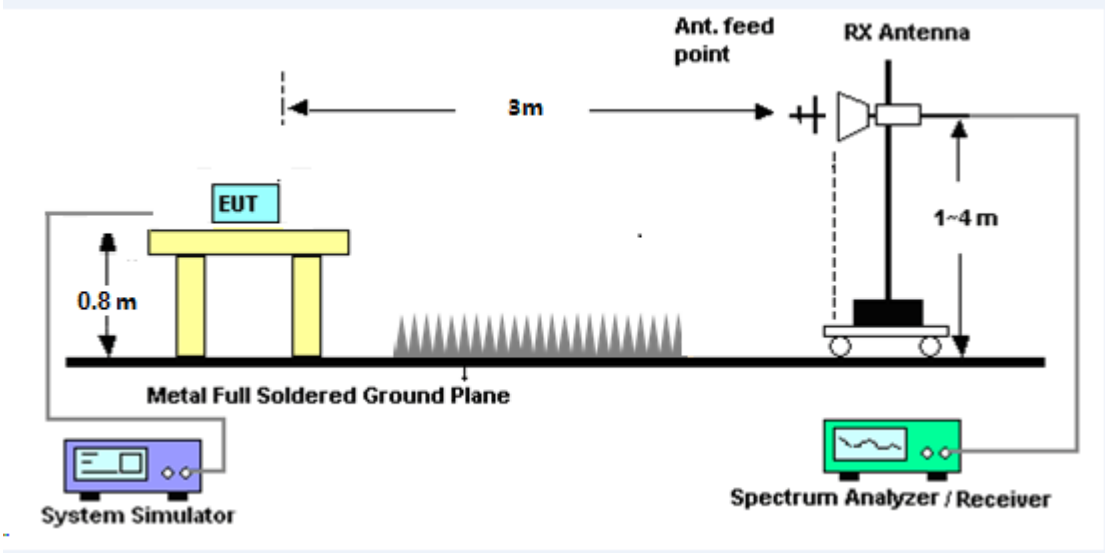

3.2.5 EUT OPERATING CONDITIONS

The EUT tested system was configured as the statements of 2.4 Unless otherwise a special operating condition is specified in the follows during the testing.

3.2.6 TEST RESULTS

30MHz -1000MHz

Temperature:	27.1 ℃	Relative Humidity:	59%
Phase:	Horizontal	Test Mode:	Mode 1
Test Voltage:	DC 5V From PC		

No.	Frequency (MHz)	Reading (dBuV)	Correct Factor (dB)	Results (dBuV/m)	Limit (dBuV/m)	Margin (dB)	Detector
1	47.1600	42.95	-20.01	22.94	40.00	-17.06	QP
2	133.1511	45.35	-17.54	27.81	43.50	-15.69	QP
3	166.6514	52.85	-19.05	33.80	43.50	-9.70	QP
4	266.6090	41.81	-15.33	26.48	46.00	-19.52	QP
5	533.8321	38.67	-7.58	31.09	46.00	-14.91	QP
6	903.3094	39.97	-2.14	37.83	46.00	-8.17	QP

Remark:

1. Margin = Result (Result =Reading + Factor)–Limit
2. Factor= Cable Loss +Antenna Factor-Amplifier Gain

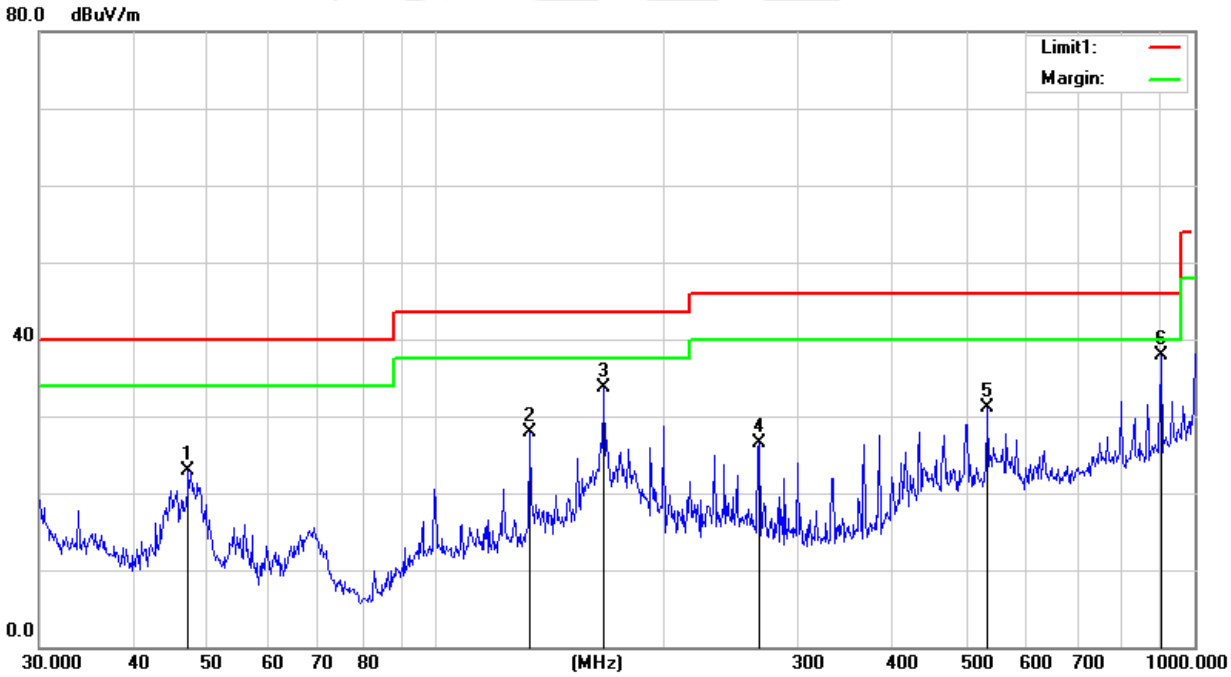

Temperature:	27.1 ℃	Relative Humidity:	59%
Phase:	Vertical	Test Mode:	Mode 1
Test Voltage:	DC 5V From PC		

No.	Frequency (MHz)	Reading (dBuV)	Correct Factor (dB)	Results (dBuV/m)	Limit (dBuV/m)	Margin (dB)	Detector
1	49.0145	37.52	-20.97	16.55	40.00	-23.45	QP
2	86.5030	48.66	-21.07	27.59	40.00	-12.41	QP
3	166.6514	49.13	-19.05	30.08	43.50	-13.42	QP
4	265.6757	42.13	-15.29	26.84	46.00	-19.16	QP
5	399.0302	45.25	-11.28	33.97	46.00	-12.03	QP
6	501.1790	42.59	-8.90	33.69	46.00	-12.31	QP

Remark:

1. Margin = Result (Result =Reading + Factor)–Limit
2. Factor= Cable Loss +Antenna Factor-Amplifier Gain

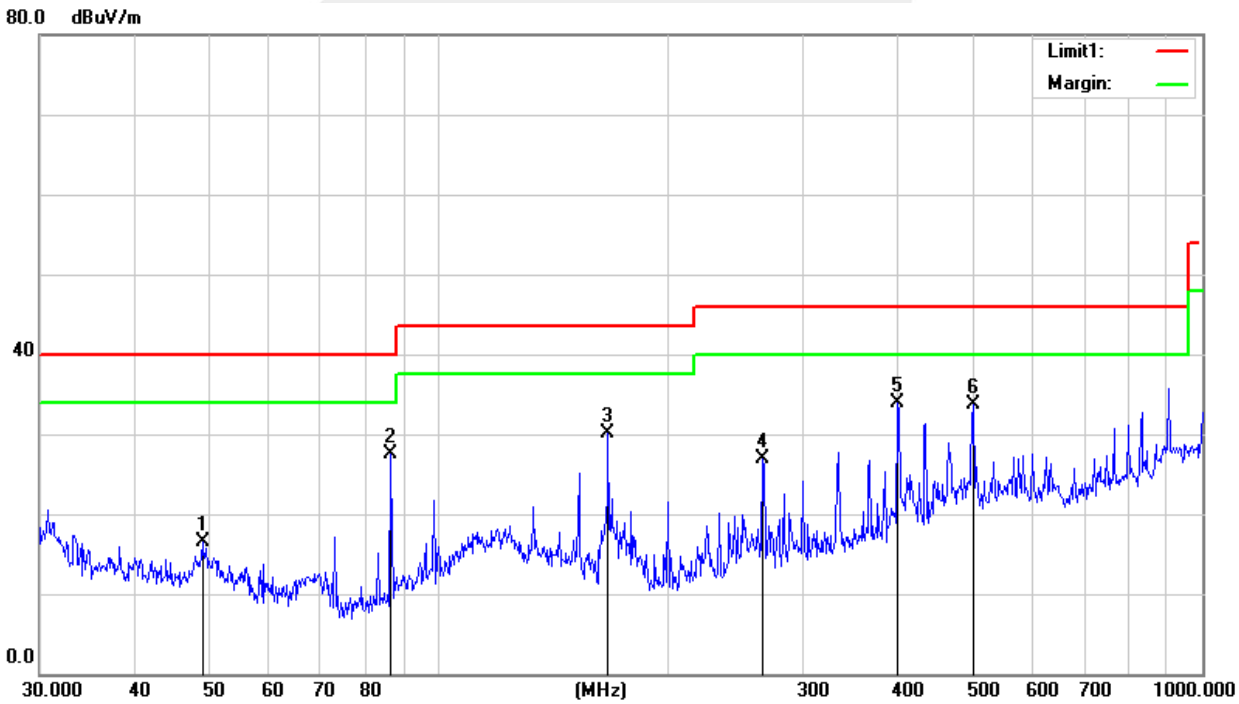

(1 GHz to 25GHz.)

Temperature:	26 ℃	Relative Humidity:	54%
Phase:	Vertical/Horizontal	Test Mode:	Mode 1
Test Voltage:	DC 5V From PC		

PK

Freq.	Ant. Pol	Peak	Amplifier	Loss	Antenna Factor	Orrected Factor	Actual Fs	Peak	Peak
(MHz)	H/V	Reading (dBuV)	（dB）	（dB）	（dB/m）	（dB）	Peak (dBuV/m)	Limit (dBuV/m)	margin (dB)
2412.33	H	54.12	43.80	5.40	25.90	-12.50	66.62	74.00	-7.38
2312.54	H	47.21	44.40	6.00	27.60	-10.80	58.01	74.00	-15.99
3145.66	H	53.20	44.70	6.70	28.20	-9.80	63.00	74.00	-11.00
4512.67	H	46.28	44.30	8.42	30.40	-5.48	51.76	74.00	-22.24
2412.33	V	57.65	43.80	5.40	25.90	-12.50	70.15	74.00	-3.85
2312.54	V	47.12	44.40	6.00	27.60	-10.80	57.92	74.00	-16.08
3145.66	V	56.33	44.70	6.70	28.20	-9.80	66.13	74.00	-7.87
4512.67	V	46.54	44.30	8.42	30.40	-5.48	52.02	74.00	-21.98
5645.22	V	40.12	44.20	9.70	32.00	-2.50	42.62	74.00	-31.38

AV

Freq.	Ant. Pol	AV	Amplifier	Loss	Antenna Factor	Orrected Factor		AV	AV
(MHz)	H/V	Reading (dBuV)	（dB）	（dB）	（dB/m）	（dB）	AV (dBuV/m)	Limit (dBuV/m)	margin (dB)
2412.33	H	37.01	43.80	5.40	25.90	-12.50	49.51	54.00	-4.49
2312.54	H	28.52	44.40	6.00	27.60	-10.80	39.32	54.00	-14.68
3145.66	H	36.33	44.70	6.70	28.20	-9.80	46.13	54.00	-7.87
4512.67	H	27.14	44.30	8.42	30.40	-5.48	32.62	54.00	-21.38
2412.33	V	35.62	43.80	5.40	25.90	-12.50	48.12	54.00	-5.88
2312.54	V	26.51	44.40	6.00	27.60	-10.80	37.31	54.00	-16.69
3145.66	V	34.10	44.70	6.70	28.20	-9.80	43.90	54.00	-10.10
4512.67	V	25.64	44.30	8.42	30.40	-5.48	31.12	54.00	-22.88
5645.22	V	20.18	44.20	9.70	32.00	-2.50	22.68	54.00	-31.32

Notes:

1. Measuring frequencies from 1 GHz to 25GHz.

2. Radiated emissions measured in frequency above 1000MHz were made with an instrument using Peak detector mode of the emission shown in Actual FS column.

3. The frequency that above 5.6GHz is mainly from the environment noise.

※※※※※END OF THE REPORT※※※※※

1/F., Building B, Zhuoke Science Park, No.190, Chongqing Road, Fuyong Street, Bao'an District, Shenzhen, Guangdong, China
Tel: +86-755 3688 6288 Fax:+86-755 3688 6277 Http://www.stsapp.com E-mail: sts@stsapp.com