Revision 改图 Record 记录	V1	2010-06-29	V2	2010-10-23	V3		V4	
	New Design 新图 First Release 首次发行		Conponent Optimization 元件参数优化					

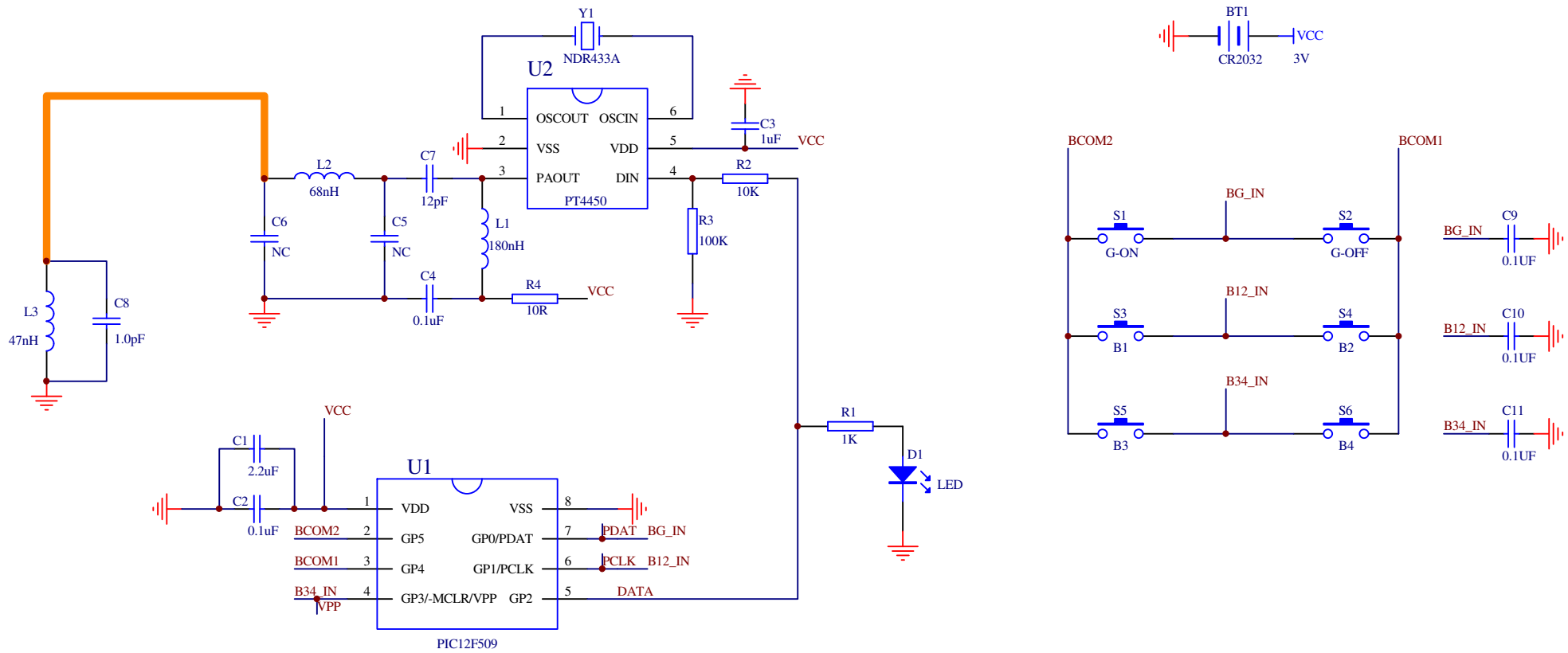

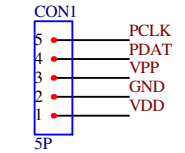

PIC12F509的程序烧录口

WELL SINO	线路板原理图 Schematic of PCB 中沛(香港)有限公司 Sino Wealthy (Hong Kong) Limited		
PCB 线路板:	6-key Remote Controller R6		
Drawing No 图纸编号:	SCH-R6	Version:	V2.0
Prepared by 制图:	Jimmy	Date:	2010-10-23
Checked by 审核:	Kevin	Date:	2010-10-23
Approved by 批准:	Frank Fu	Date:	2010-10-23