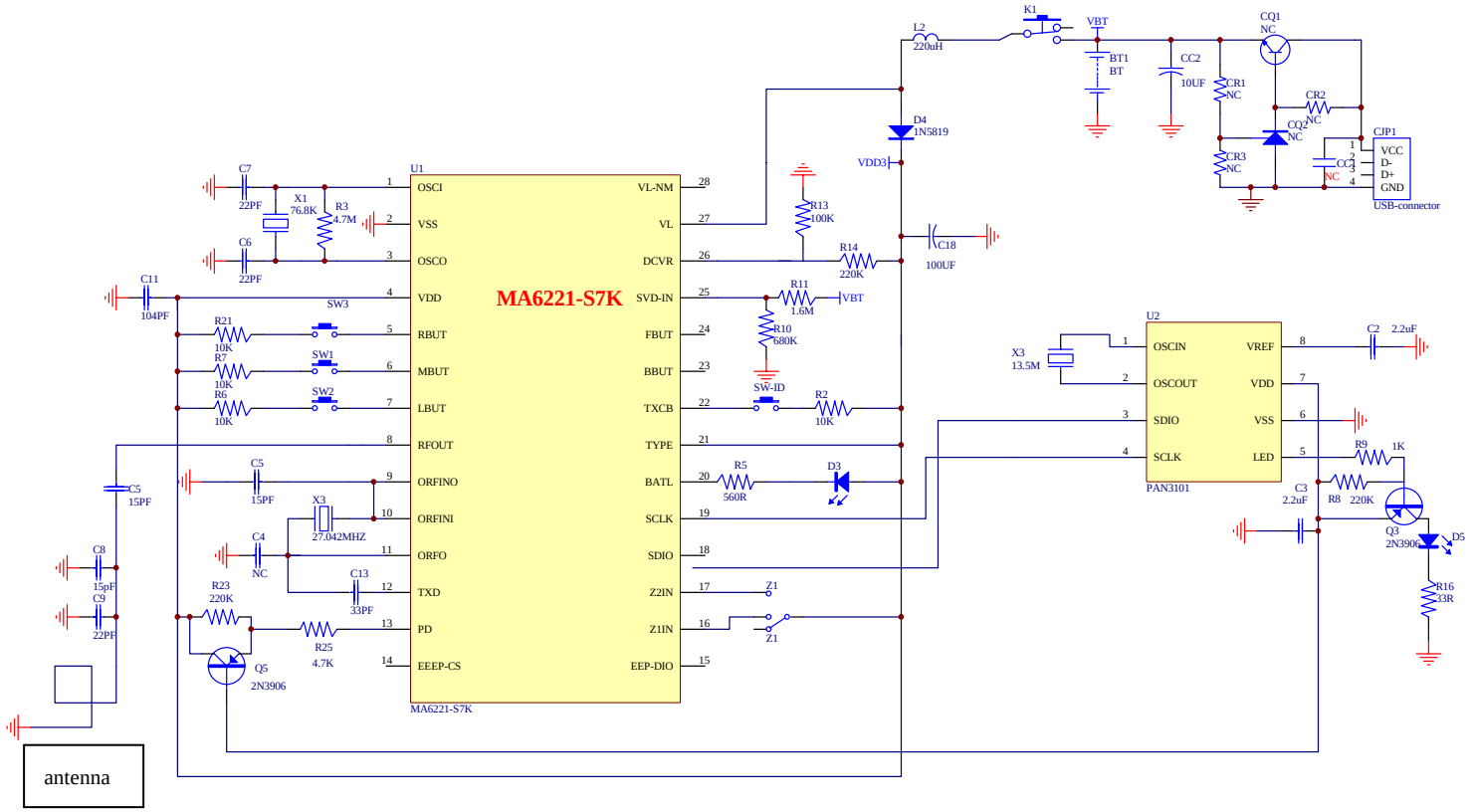

Title		
Size B	Number	Revision
Date: 23-Jun-2009		Sheet of
File: E:\yuheping\RD\2135\2135.ddb		Drawn By: